PRACTICAL SEISMIC DESIGN AND CONSTRUCTION MANUAL FOR RETROFITTING SCHOOLS IN THE KYRGYZ REPUBLIC

Svetlana Brzev and Ulugbek Begaliev

THE WORLD BANK
IBRD • IDA | WORLD BANK GROUP

GFDRR

1818 H Street NW, Washington DC 20433

Telephone: 202-473-1000;

Internet: www.worldbank.org

Cover photos: Svetlana Brzev

TABLE OF CONTENTS

APPENDICES

Acknowledgments

The report was authored by Dr. Svetlana Brzev (Canada) and Dr. Ulugbek T. Begaliev (Kyrgyz Republic), individual World Bank consultants for the Urban Development Project - Kyrgyz Republic (UDP-KR). A significant contribution was made by Mr. Ivan Milićević, M.Eng., Faculty of Civil Engineering, University of Belgrade, Serbia, who performed numerous analyses and provided valuable input related to Chapter 5. Content of Chapter 6 was based on the project performed by JV ALL Ingegneria and AIRES Ingegneria, Italy, World Bank's Consultants for the UDP-KR. The main contributors to Chapter 6 are Ph.D. Ing. Gianfranco Laezza, eng. Gennaro di Lauro, and eng. Pasquale Crisci (AIRES Ingegneria); and eng. Marco Lorenzini and eng. Marco Principi (ALL Ingegneria). Graphic design for the report was performed by Mr. Prithul Saha, M.Arch., New Delhi, India and Ms. Keerthana S., M.Arch., Bangalore, India. Russian translation of the report was prepared by Ms. Olga Korol, Belarus.

It would not be possible to develop and finalize a report of this size without the support and assistance provided by several individuals and organizations. The authors are grateful to the World Bank for giving them an opportunity to undertake this project. The authors gratefully acknowledge Ms. Kremena Ionkova, Ms. Paula Restrepo-Cadavid, and Ms. Chyi-Yun Huang, Task Team Leaders for the UDP-KR, for providing exceptional support and guidance during the development of this report. The authors would like to thank Ms. Tolkun Jukusheva and Ms. Zhanetta Baidolotova from the World Bank's country office, Kyrgyz Republic for their assistance at the initial stage of the project which was launched in Bishkek in November 2016. The authors appreciate support provided by ARIS, Kyrgyz Republic, particularly Ms. Asel Yrysbekova, Mr. Balbak Umetov, and Mr. Vasiliy Bormintsev.

The authors would like to acknowledge the contribution by technical reviewers who provided valuable feedback and recommendations which were critical for improving the report. Mr. Fernando Ramirez Cortes and Ms. Carina Fonseca Ferreira reviewed the report on behalf of the World Bank. National technical reviewers Dr. Gennady Kosivtcov, Head of Department of Earthquake Engineering of the GISSiIP under Gosstroy KR, and Dr. Marat Kubandykovich Abdybaliev, General Director of Design Institute "Prom Project" (both from Bishkek, Kyrgyz Republic), provided a valuable local perspective related to the technical content of the report.

The authors also acknowledge assistance provided by the following individuals from Bishkek, Kyrgyz Republic: Dr. Akbermet Matyeva, Dr. Turatbek Kasymov, Mr. Sergey Utishev (International University of Innovation Technologies), Mr. Arstanbek Duisheev, Mr. Kanat Kanbolotov, Mr. Rakhat Musakov (GISSiIP under Gosstroy KR), Mr. Emil Kyshtobaev, Mr. Nikolay Pokusaev (PromProject), Mr. Sultan Askarbekov, Mr. Erlan Korchubay uulu (ARIS), Mr. Taalay Bekeev (Director of Conctruction Company "Zalkar Kurulush") Bishkek, Kyrgyz Republic.
Ms. Kiran Rangwani, M.Tech., Ahmedabad, India assisted with compiling material for Chapter 6 of the report.

The authors are grateful to several colleagues who shared technical resources and information invaluable for this project, including Dr. Svetlana Uranova, Canada; Prof. Stavroula Pantazopoulou, Canada; Dr. Bishnu Pandey, Canada; Prof. Ken Elwood, New Zealand; Prof. Bozidar Stojadinovic, Switzerland; Dr. Gianfranco Laezza, Italy, and Prof. Koichi Kusunoki, Japan. The authors gratefully acknowledge assistance of Dr. T.S. Kumbar, Librarian at the Indian Institute of Technology Gandhinagar, India and the Library staff for providing access to numerous international research publications.

Credits

The authors and the World Bank acknowledge the following organizations and individuals who have kindly given permission to reproduce the photographs and drawings included in this report: Earthquake Engineering Research Institute; Federal Emergency Management Agency; National Information Center for Earthquake Engineering; Polat Gulkan; A. Meslem; James Jirsa; Maximiliano Astroza; Ken Elwood; Sudhir Jain; Luis Mejia; Mark Klyachko; Shamil Khakhimov; B. Nurtaev; J. Sherstobitoff; J.M. Proença; University of Auckland; JV ALL Ingegneria and AIRES Ingegneria.

1. Introduction

1.1 Overview

Central Asia's earthquake activity has long been recognized as one of the highest in the world. A significant portion of the Kyrgyz Republic's (KR) territory is expected to be exposed to earthquakes of magnitude 7.5 or higher per Richter scale (corresponding to the shaking intensity 9 per MSK-64 scale). The territory of the KR was subjected to several damaging earthquakes, including the 1992 Sysamyr earthquake (magnitude 7.3). In the period from June 1, 2009 to September 30, 2010, the country experienced 2,398 earthquakes of magnitude 6 or higher.

Seismic vulnerability of school buildings is a particular concern, because most school buildings in the country feature unreinforced masonry construction and are highly vulnerable to earthquake effects. As a part of an initiative to improve seismic safety of schools in the KR, the United Nations Children's Fund (UNICEF)[1] and a few other organizations sponsored a comprehensive study in 2012 and 2013. A rapid seismic assessment of 806 kindergartens (preschools) and 2222 schools was performed by the Kyrgyz Scientific Research and Design Institute for Seismic-Proof Construction (formerly KNIIPSS, currently State Institute for Earthquake Engineering and Design - GIISSiUIP). According to the UNICEF methodology document[2], all surveyed buildings were classified as Low, Medium or High Safety, depending on the seismic hazard and the type of construction. The results indicate that more than 80 % of all surveyed kindergartens and schools have "Low Seismic Safety" rating. On the whole, nearly nine out of ten preschools and schools fail to meet the standards for structural integrity and require immediate structural and nonstructural changes.

The Ministry of Education responded by drafting a state program focused on introducing mitigation measures and improving safety of schools. The State Program "Safe Schools and Pre-School Institutions in the KR" (2015-2024) has since been adopted by the Government of KR. The Program seeks to address the issue of reconstructing and retrofitting of school facilities to improve their seismic resilience and safety.

The World Bank's Urban Development Project (UDP) has supported the retrofitting of several school buildings on a pilot basis to improve both their seismic safety and energy efficiency. The pilot is intended to retrofit six typical school buildings in project affected areas, benefiting around 5,000 students.

The official code for seismic design of new buildings and retrofit of existing buildings in the KR is СНиП КР 20-02:2009. The methodology for assessing seismic safety of buildings in the KR is prescribed by the code СниП 22-01-98 КР, which provides a framework for seismic assessment of all existing buildings in the KR, including school buildings. However, a code for seismic retrofitting of existing buildings is currently not in place in the KR. This is in contrast with many other countries and regions, where codes and guidelines for seismic rehabilitation of existing buildings have been in place. For example, codes for seismic evaluation and retrofitting of existing buildings are in place in the European Union (EN 1998-3:2005), USA (ASCE/SEI 41-13), and Japan (Japan Building Disaster Prevention Association 2001). Several comprehensive guidelines are also available, for example FEMA 547 (2006) in the USA, FIB (2003) in Europe, and JBDPA (2001) in Japan.

---

[1] UNICEF (2014). Assessment of Safety in School and Pre-School Education Institutions in the Kyrgyz Republic: Summary Report, United Nations Children's Fund.

[2] UNICEF (2013). Methodology and Tools for Safety Assessment of Schools and Pre-Schools in Kyrgyzstan, United Nations Children's Fund.

Engineers in the KR have access to a few local technical resources on the subject, e.g. КНИИПСС (1996), developed in the KR, which covers seismic retrofit techniques for buildings, and a catalogue developed by Госстрой СССР (1987), Харьковским Промстройниипроектом (1992), ЦНИИСК им. Кучеренко (1984) in the Soviet Union.

There is a significant experience related to seismic retrofitting of existing buildings in many earthquake-prone regions of the world. Majority of older existing buildings were not designed to the seismic hazard level expected by current design codes; also, some building typologies (like unreinforced masonry) are inherently more vulnerable to earthquake effects than others, e.g. well-designed reinforced concrete (RC) and steel buildings. It should be noted that seismic retrofitting of school buildings has been performed in several countries. For example, many masonry school buildings suffered significant damage in the 1933 Long Beach earthquake (magnitude 6.2). After the earthquake, US State of California passed the Field Act requiring seismic design for public schools, use of reinforced masonry, and site inspection for all new schools. No school building has collapsed in an earthquake in California since the implementation of the Field Act. There is also an ongoing seismic retrofit program for school buildings in the Province of British Columbia, Canada, which is sponsored by the provincial government. Government of Iran has also undertaken seismic retrofit of school buildings in the country. In Central Asia, seismic retrofitting of school buildings was previously undertaken in Uzbekistan. Notable initiatives were undertaken to retrofit school buildings in Peru and Nepal.

It appears that the experience associated with field implementation of seismic retrofit for buildings in the KR has been limited. Only a few public and administrative buildings in Kyrgyz Republic have been retrofitted. There is no previous experience related to retrofitting of school buildings, except for the schools which suffered damage in past earthquakes and were repaired to restore their structural integrity to pre-earthquake condition. Limited experience related to seismic retrofitting prompted development of the current publication, entitled “Practical Seismic Design and Construction Manual for Retrofitting Schools in the Kyrgyz Republic” (referred as Manual in the text).

1.2 Purpose, Objectives, and Goals

The primary purpose of this Manual is to provide technical guidance through the seismic retrofit process for typical RC and masonry school buildings in the KR. The retrofit techniques have been selected keeping in mind the capacity of local construction industry, financial sustainability, and availability of materials in local or easily accessible markets. Seismic analysis and design have been presented in a manner suitable for engineering professionals. Ample illustrations have been provided to clarify the theory and field applications. The Manual is compliant with the local seismic and design codes, but relevant international codes and guidelines have also been referenced.

The main objective of the Manual is to support the Government of KR in implementing the ongoing State School Safety Program.

The goals of the Manual are to:

- Describe building typologies for RC and masonry schools in the KR and identify their seismic deficiencies,
- Describe seismic retrofit techniques and schemes for structural elements in masonry and RC school buildings in the KR,
- Discuss construction procedures and implementation challenges, and
- Present design case studies to illustrate seismic retrofit process for structural elements in RC and masonry schools.

1.3 Audience and Beneficiaries

The audience for this publication are primarily engineers engaged in seismic retrofitting projects of schools in the KR, including the Ministry of Education technical staff, the State Institute for Earthquake Engineering and Design (GIISSiIP), the State Agency for Architecture, Construction, and Housing-Communal Services (Gosstroy KR), and the structural engineering and construction professionals in the KR.

It is expected that the use of Manual and field implementation of seismic retrofitting of school buildings will improve the seismic safety of the KR's population, however the direct beneficiaries of the Manual are students, teachers, and preschool children.

1.4 Scope

The Manual is intended to describe the most feasible retrofit techniques for prevalent RC and masonry school building typologies in the KR. The basics of earthquake engineering are not covered in the Manual. It is assumed that the reader has a sufficient background related to seismic analysis and design of new RC and masonry buildings. The methods and procedures for seismic evaluation of buildings have also been omitted. It is assumed that the engineer has previously identified seismic deficiencies in the critical structural elements and determined that the seismic retrofit is required. The Manual is intended to assist the engineers with in the selection of practical and cost-effective techniques to mitigate the key seismic deficiencies in RC and masonry school buildings.

It is acknowledged that numerous seismic retrofit techniques are available for RC and masonry buildings, and many of them are not covered in the Manual. The emphasis in the Manual has been made on proven retrofit techniques which have demonstrated satisfactory performance in past earthquakes and/or experimental studies.

Seismic analysis and retrofitting techniques for nonstructural components are not covered in the Manual, however basic information is presented in Chapter 2.

1.5 Organization of the Document

The Manual is divided into six chapters. **Chapter 1** provides an overview of the Manual, its purpose, audience, and scope. **Chapter 2** provides an overview of seismic design approaches followed by the KR seismic codes and international codes and guidelines. Linear seismic analysis procedure (Spectral Method) is used for analysis of existing and retrofitted structures according to the KR seismic code СНиП КР 20-02:2009 in conjunction with the force-based seismic approach. On the other hand, nonlinear static analysis ("pushover analysis") is used in conjunction with the performance-based seismic design. Nonlinear analysis is currently not prescribed by the KR seismic design codes, but it has been incorporated in the seismic codes in Europe (Eurocode 8) and USA (ASCE/SEI 41/13), especially related to seismic evaluation and retrofit of existing buildings. This approach has been introduced in Chapter 2 to provide background for prospective future applications in the KR. **Chapter 3** describes prevalent building typologies for school buildings in the KR, including their key structural elements. It is important to understand how these buildings would behave when subjected to damaging earthquakes. Some of these building typologies were exposed to earthquakes in Central Asia and the former Soviet Union, and/or other parts of the world. Based on these observations, as well as general principles of earthquake-resistant design, their seismic deficiencies have been identified as the basis for selecting appropriate seismic retrofitting schemes. **Chapter 4** provides an overview of the appropriate seismic retrofitting techniques for masonry and RC school buildings in the KR. This chapter explains the seismic retrofitting process, and various considerations that should be taken into account while developing seismic retrofit schemes for specific building typologies. An overview of relevant retrofitting techniques for RC and masonry buildings is also provided. For each retrofit technique, key concepts both in terms of design

and construction and evidence of its performance in past earthquakes and/or experimental studies, are presented. The guiding principle in selecting a retrofit technique is a potential for its successful application in the KR, primarily from the perspective of available construction resources and skills (in addition to the required seismic safety). **Chapter 5** presents a design case study on retrofitting of a RC school building of the 1970s vintage. This is a typical school with precast RC frames and exterior precast concrete panels. This building typology is particularly vulnerable to earthquake effects, as confirmed during the 1988 Spitak, Armenia earthquake. The building was analyzed before and after the retrofit. Relevant design checks were performed to confirm that the retrofitted building meets the requirements of the pertinent KR codes, and/or international codes (if Kyrgyz codes are not applicable). **Chapter 6** presents a retrofit design case study for a masonry school (based on the pilot retrofit project for Toktogul and Balykchy schools performed under the World Bank's Urban Development Project). Field implementation of seismic retrofitting techniques discussed in Chapter 6 is illustrated in Appendix C.

1.6 Key Resources

Resources from the KR, Central Asia, and the Russian Federation

СНиП 22-01-98 КР Оценка сейсмостойкости зданий существующей застройки (Assessment of seismic safety of buildings). Минархстрой Кыргызской Республики, Bishkek, Kyrgyz Republic (in Russian).

СНиП КР 20-02:2009. Сейсмостойкое строительство. Нормы проектирования (Earthquake engineering design standard). Государственное Агентство По Архитектуре И Строительству При Правительстве Кыргызской Республики. Bishkek, Kyrgyz Republic (in Russian).

КНИИПСС (1996). Проектирование Зданий и Сооружении в Сейсмических Районах (Design of Buildings and Structures in Seismic Zones), Bishkek, Kyrgyz Republic (in Russian).

Госстрой (1987). Каталог Конструктивныx Решений по Усилению и Восстановлению Строительньx Конструкций Промышленныx Зданий (Catalog of Construction Solutions for Strengthening and Restoring Building Constructions of Industrial Buildings). Госстрой СССР, Москва (in Russian).

ЦНИИСК им. Кучеренко (1984). Рекомендации по усилению каменных конструкций зданий и сооружений (Recommendations for Strengthening of Masonry Structures and Buildings). Стройиздат, Москва (in Russian).

Харьковский Промстройниипроект, НИИЖБ. (1992). Рекомендации по проектированию усиления железобетонных конструкций зданий и сооружений реконструируемых предприятий - Надземные конструкции и сооружения (Recommendations for Design of Reinforcement of RC Structures under Reconstruction - Aboveground Structures). Стройиздат, Москва, 191с (in Russian).

Key International Resources

FEMA 547 (2006). Techniques for the Seismic Rehabilitation of Existing Buildings (FEMA 547). Federal Emergency Management Agency, Washington D.C., USA.

FIB (2003). Seismic Assessment and Retrofit of Reinforced Concrete Buildings, State-of-the-art report, Bulletin 24, Lausanne, Switzerland.

ASCE/SEI (2014). Seismic Evaluation and Retrofit of Existing Buildings. ASCE standard ASCE/SEI 41-13, American Society of Civil Engineers, Reston, VA, USA.

EN 1998-3:2005 (2005). Eurocode 8: Design of structures for earthquake resistance – Part 3: Assessment and retrofitting of buildings and bridges. European Committee for Standardization, Brussels, Belgium.

JBDPA (2001). Standard for Seismic Evaluation of Existing Reinforced Concrete Buildings. Guidelines for Seismic Retrofit of Existing Reinforced Concrete Buildings. Technical Manual for Seismic Evaluation and Seismic Retrofit of Existing Reinforced Concrete Buildings, Japan Building Disaster Prevention Association, Tokyo, Japan.

1.7 Disclaimer

The seismic retrofit techniques and the design case studies presented in the Manual are intended to provide guidance to qualified engineers. The retrofit schemes and analysis assumptions pertaining the case studies presented in the Manual should not be applied to seismic retrofit of other structures without due consideration of their specific features. Development of the final retrofit solution for a specific building is a sole responsibility of the design engineer. The details and specifications presented in the Manual are not to be used in an actual seismic retrofit project without review for technical and geometric applicability in the project-specific context. This publication does not aim to prescribe, complement, guide or replace any provisions of the existing seismic codes which are currently in effect in the KR.

2. Seismic Hazard Setting and Seismic Design Approaches

2.1 Introduction

The official code for seismic design of buildings and other structures currently used in the Kyrgyz Republic (KR) is СНиП КР 20-02:2009. Previous versions of the code were developed in the former Soviet Union, starting with СН-8-57 issued in 1957, and subsequent editions in 1962 and 1981 (СНиП II-7-81).

СНиП КР 20-02:2009 is applicable both to design of new buildings and the retrofit of existing buildings. However, seismic safety of existing buildings in the KR is evaluated by СНиП 22-01-98 КР, which provides a framework for seismic assessment of existing buildings in the KR, including school buildings. However, seismic analysis and design for retrofit purposes are performed according to СНиП КР 20-02:2009 and other applicable codes.

Seismic design provisions of СНиП КР 20-02:2009 consider the key factors which influence seismic performance of buildings, such as: i) seismic hazard of the region, ii) soil condition at the building site, iii) dynamic characteristics of the building (natural frequencies/periods and the corresponding modal shapes), iv) seismic loads to be considered for design in combination with other loads, v) seismic analysis methods, and vi) special requirements for seismic design of specific structural systems.

This chapter provides an overview of seismic hazard in the KR (Section 2.2) and seismic design approaches for buildings (Sections 2.3 and 2.4). СНиП КР 20-02:2009 prescribes only linear seismic analysis methods which are used to perform a force-based seismic design. The current force-based seismic design approach may not be most feasible for seismic evaluation and retrofit of the existing buildings, which is the main focus of this Manual. Some international seismic design codes have introduced performance-based seismic design approach as an alternative to the force-based approach. Performance-based design approach is focused on assessing performance (damage) of the structure and its components for a given seismic hazard in a quantitative manner. Performance-based design approach is used in conjunction with nonlinear seismic analysis methods. Seismic design codes in the KR are currently being revised and it is expected that nonlinear analysis methods will be prescribed for some applications. Section 2.5 contains a primer on the performance-based design and nonlinear seismic analysis methods, which may be relevant for future seismic evaluation and retrofit projects in the KR.

The main focus of this Manual is on seismic analysis of structural elements in the schools, however a limited background on the seismic analysis approaches for nonstructural elements is provided in Section 2.6.

2.2 Seismic Hazard in the Kyrgyz Republic

2.2.1 History of past earthquakes in the Kyrgyz Republic

Seismic hazard (seismicity) represents the seismic threat (ground shaking) at the building site for given knowledge of the potential earthquake sources. Specification of ground shaking is linked to i) geology and site characteristics, such as the soil profile and shear wave velocity among other factors, and ii) site seismicity, which depends on the seismic sources. Seismic hazard is an important input parameter for seismic design because it significantly influences magnitude of seismic forces or accelerations that need to be considered in seismic analysis.

The territory of the KR is subjected to high seismic hazard, hence the existing buildings in the country are likely going to be exposed to major earthquakes. The current version of the seismic map of the country classifies settlements based on expected seismic intensity (balov) according to the MSK-64 scale (e.g. 7, 8, 9, or higher). It is difficult to make a direct correlation between the MSK-64 scale and the approach to assign seismic hazard which is used in some other countries, where seismic hazard for specific site location is expressed in terms of the Peak Ground Acceleration (PGA) for a design earthquake (expressed as a fraction of acceleration of gravity, g), which is usually set by a building code. PGA value for a specific location depends on the proximity to earthquake sources (faults) and the expected probability of earthquake exceedance (e.g. 2% probability of exceedance in 50 years is used in the USA and Canada). Modified Mercalli Intensity (MMI) scale is used in the USA and other countries to correlate an earthquake intensity level with the corresponding PGA value. For example, MMI intensity IX (which is slightly less severe than MSK-64 intensity 9) is associated with the PGA value of 0.65g or higher[1]. In comparison, PGA value for design earthquake at Anchorage, Alaska is 0.4g[2] (this is one of the locations with the highest seismic hazard in the USA). Some regions in the KR with MSK-64 intensity 9 are expected to experience earthquakes with magnitude 7.5 or higher per Richter's scale (КНИИПСС, 1996).

In the last 25 years, Kyrgyz Republic was subjected to several damaging earthquakes, including the 1990 Baisoorun earthquake (magnitude 6.3), the 1992 Suusamyr earthquake (magnitude 7.3) and the 1992 Kochkor-Ata earthquake (magnitude 6.1). In the period from June 1, 2009 to September 30, 2010, the country experienced 2,398 earthquakes with magnitude 6 or higher[3]. South-east part of the country was also affected by a magnitude 6.1 earthquake of November 2014.

Since 1883 the territory of the KR has experienced numerous earthquakes of intensity 6 and higher. Most of the territory of the Northern and Southern Tien Shan experienced earthquakes of intensity 8 to 9. Areas of the highest intensity form the belt covering a considerable part of the Kyrgyz Mountain Edge, Kungei-Alatoo, and Zaili Mountain Edge (including its footsteps), spreading to Chui, Issyk-Kyl, and Iliy cavities, and also along the joint of Chatkal and Fergana Mountain Edges, and the eastern part of the Fergana cavity. The third zone of strong earthquakes is located along the Zaalay Mountain Edge. It is estimated that 5 % of the whole territory of the KR is located within the zone of intensity 7, and other 30 % of the territory with the zone of intensity 8. Zone of intensity 9 and higher covers the remaining part (more than 50%) of the territory.

A review of the locations of past earthquakes allows identification of the main seismically active zones in the country. First of all, it is North-Tian-Shan zone characterized by disastrous earthquakes, including Belovodsk (1885) and Vernensk (1887) earthquakes; Kemin (1911) and Chilik (1889) (intensity 10); Kemin-Chui (1938); Sarykamysh (1970); Zhanalash-Tyup (1978); Baysoorun (1990) (intensity 8-9). Within the boundaries of Northern Tien-Shan, these zones include Kemin-Chelik (North-Issyk-Kul); Sarykamysh; South-Issyk-Kul, and South-Chui seismically active zone. The above-mentioned zones have approximately the same seismic activity levels.

---

[1] http://earthquake.usgs.gov/research/shakemap/#intmaps

[2] 2008 USGS seismic hazard maps used for the International Building Code 2012 (http://earthquake.usgs.gov/designmaps/us/application.php)

[3] MoES (2015). Безопасные Школы и Дошколъные Учреждения в Кыргызкой Республике (Safe Schools and Preschools in Kyrgyz Republic), Министерство образования и науки Кыргызской Республики, Government Resolution No 551, July 30, 2015 (in Russian)

Within the central part of Tien-Shan the most seismically active zones are: Son-Kul zone in the middle flow of the Naryn River; Moldo-Too and Jumgal-Suusamyr zones in the south, and the Jumgal and Suusamyr Mountain Edge. The 1992 Suusamyr earthquake (intensity 9) occurred in this zone. The earthquake is reported to have occurred along a strike-slip fault in an unpopulated internal region of the Tien Shan mountain range (Kalmetieva et al., 2009). The area was previously thought to have low seismic hazard due to low frequency of recorded seismic events. Although the epicenter was in an unpopulated area, and the population density in the wider area is low, the earthquake still caused about 75 fatalities, including 14 people that were reportedly killed by landslides.

Epicenters of most notable past earthquakes were located in the Chatkal-Fergana seismically active region. One of the most active zones is Sary-Chelek seismic knot. The epicentral area of Chatkal earthquake (1946) was located with the boundary of Sary-Chelek seismic knot. Within the Chatkal-Fergana zone the most remarkable are Sary-Chelek-Chatkal, Naryn, and Kara-Suu seismic knots which are adjacent to Atoinok, Chatkal, and Fergana Mountain Edges.

Well-known Northern Fergana seismically active region is located at the south of Chatkal-Fergana zone. This wide band of epicenters covers north-western, north- and north-eastern parts of mountain range of Fergana Valley. Northern Feragana region experienced several important earthquakes, including the 1883 Osh earthquake and the 1903 Aim earthquakes of intensity 8; the 1927 Namangan earthquake of intensity 9; the 1908 Chust earthquake; the 1926 Jalal-Abad earthquake; the 1962 Markansui earthquake; and the 1984 Pap earthquakes of intensity 7-8.

Within the boundaries of the Southern Fergana seismically active region there are four seismically active parts: Isfara-Batken, Aidarken, Eski-Nookat, and Fergana. Southern Fergana region experienced the 1977 Batken earthquake of intensity 8-9 and the 1907 Eski-Nookat and Fergana earthquakes of intensity 8. A review of the above-mentioned seismically active regions shows that the epicenters of strong earthquakes contoured the lower part of the Fergana Valley, adjacent to the mountain foothills.

The earthquakes which occurred within the Tien-Shan region were characterized by small focal depths. Most earthquakes had a focal depth in the range from 5 to15 km, and in a few cases 16 to 20 km. Earthquakes with a focal depth of 20-25 km occurred within South-Chui, North-Fergana, and South-Fergana zone, while earthquakes at the Kemino-Chilik and Fergava-Chatkal seismically active zones had focal depth of 25-30 km.

There are several seismically active regions and fault lines in the KR. First of all, these are large North-Tien-Shan and South-Tien-Shan regions, which experienced many damaging earthquakes of magnitude 8 and higher. Table 2-1 lists the strongest earthquakes which occurred within the KR territory during the last 120 years with intensity 7 and more.

Table 2-1. History of Earthquakes in the Kyrgyz Republic

Earthquake (MSK intensity)	Date (day.month.year)	Coordinates		Magnitude, M
		φN	λE	
Osh (7)	14.11.1883	40,5	72,8	2 group of intensity
Belovodsk (9-10)	03.07.1885	42,7	74,1	2 group of intensity
Vernyi (9-10)	09.06.1887	43,1	77,0	2 group of intensity
Chilik (9-10)	12.07.1889	43,2	78,6	1 group of intensity
Andijan (9)	03.12.1902	40,7	72,4	2 group of intensity
Andijan (8-9)	16.12.1902	70,7	72,4	2 group of intensity
Aim (8)	28.03.1903	40,8	72,7	2 group of intensity
Eski-Nookat (8)	15.09.1907	40,3	72,0	2 group of intensity
Kemin (10)	3.01.1911	42,8	76,7	8
Kurshab (7-8)	06.07.1924	40,5	73,0	$6^1/_2$
Kurshab (8)	12.07.1924	40,5	73,0	$6^1/_2$
Namangan (8)	12.08.1927	41,0	71,6	$5^3/_4$
Frunze (4)	23.08.1928	42,0	73,0	$5^1/_2$
Frunze (4)	22.03.1928	42,6	74,3	$5^1/_4$
Tyup (6-7)	24.12.1932	42,8	78,2	$5^1/_2$
Kemin-Chui (8-9)	20.06.1938	42,7	75,8	$6^1/_2$
Chatkal (9)	02.11.1946	41,8	71,8	$7^1/_2$
Sary-Kamysh (8-9)	05.06.1970	42,5	78,6	6,8
Zhanalash-Tyup (8-9)	1978	42,8	78,6	7,1
Baisoorun (8)	12.11.1990	43,00	77,57	6,3
Kochkor-Ata (8)	15.05.1992	41,06	72,25	6,1
Suusamyr (9 and more)	19.08.1992	42,04	73,38	7,3
Kyrgyz-Xinjiang border (8)	14.02.2005	41,728	79,440	6,1
Batken (8)	08.01.2007	39,803	70,312	6,0
Alay (8)	05.10.2008	39,533	73,824	6,7
Kadamjay (8)	19.07.2011	40,081	71,410	6,1
Sary-Tash (8)	26.06.2016	39,479	73,339	6,4

2.2.2 Seismic Zoning Maps

When developing seismic zoning maps (also known as “seismic hazard maps”), the attempts were made to integrate the available data, using both the "formal" approach (Borisov, Reisner, Sholpo, 1975[1]), and the "traditional" (deterministic) application of expert assessments (Knauf, 1988[2]).

Prominent Russian geologist D.I. Mushketov was the first to perform seismic zoning in Central Asia, including Kyrgyzstan, in 1933. Available seismostatistical and geological records were used as source data, therefore the map was called “seismotectonic”. It reflected isoseists of seismic events of various intensity (5, 7, 9), and epicenters and pleistoseist areas of the strongest known earthquakes: Chilik, 1911 (magnitude 8.3; focal depth 25 km), Qaratog, 1907 (magnitude 7.4; focal depth 24 km), Sarez, 1911 (magnitude 7.3; focal depth 70-90 km), etc. Zones of intensity 7 shocks were united and formed strips

[1] Борисов Б.А., Рейснер Г.И., Шолпо В.Н. (1975) Выделение сейсмоопасных зон в альпийской складчатой области (Seismic Zonation in the Alpide Seismic Belt). Москва: Наука (in Russian).
[2] Кнауф В.И. (редактор). (1988) Детальное сейсмическое районирование Восточной Киргизии (Detailed Seismic Zonation of Eastern Kyrgyzstan). Фрунзе, Илим (in Russian).

corresponding to fold belt extensions in certain places, e.g. in the Pamirs and the western Tajik Depression. According to the map, earthquakes of intensity 5-6 are possible throughout Kyrgyzstan. G.P. Gorshkov, who assisted D.I. Mushketov in his work, made his own version of the seismic zoning map of Central Asia in 1938. This map, as well as the previous one, marked areas corresponding to pleistoseist zones of the Kemin, Qaratog and Sarez earthquakes as zone of intensity 9. Much of the Kyrgyzstan's territory was shown on this map as zones of intensity 7 and 6. Northern part of the country, including Issyk-Kul and Chui cavities, belonged to the zone of intensity 9. G.P. Gorshkov published the next version of the seismic zoning map of Central Asia in 1948. The map showed that almost entire Central Tien Shan area belongs to the zone of intensity 8. A localized area of intensity 9 appeared on the map to cover the pleistoseist zone of the 1946 Chatkal earthquake.

In 1957, S.V. Medvedev led the development of the new seismic zoning mapping of the USSR, including Kyrgyzstan, as an annex to the Building Norms and Guiding Principles in Seismic Regions. Unlike the previous seismic zoning map developed by G.P. Gorshkov, the map developed in 1957 smoothed border curves of zones of various intensity, e.g. in the Tajik Depression. It should be noted that the zone of intensity 8 still covered large areas in the Central Tien Shan. However, the zone of intensity 9 was considerably extended to include much of the mountains surrounding Fergana.

The first separate seismic zoning map of the Kyrgyzstan, based on a joint analysis of geological, geophysical and seismological data, was developed in 1976 (Dzhanuzakov et al., 1977[1]). All the strong earthquakes that occurred after the publication of this map, confirmed its validity. These earthquakes occurred within the zones of possible earthquake epicenters, indicated on the map, and their magnitudes did not exceed the expected values. An exception was the 1992 Suusamyr earthquake (magnitude 7.3), which had a magnitude by 2 units higher than expected. For the sake of justice, it should be noted that this earthquake was unexpected for seismologists around the world who studied the earthquake.

A subsequent version of the seismic zoning map was published in 1996 (Turdukulov, 1996[2]). According to the map, there are 23 seismically active zones with possible occurrences of earthquakes in the country. The expected earthquake intensities range from 6 to 9 and higher (according to MSK-64 scale). As a result of such earthquakes, there are residual deformations of both seismic and seismo-gravitational character. These zones include the North Tien Shan, Aramsu, Jumgalo-Terskey, Chatkalo-Fergana, Tarsko-Yuzhnofergan and Gissar-Kokshal zone (made up of Drava-Karakul and Kushal segments). Each zone has its own geological structure and different geodynamic conditions[3].

The current seismic zoning map of the KR was developed in 2011 (Abdrakhmatov, 2011[4]) and it was put into effect in 2012 as a new annex to СНиП КР 20-02:2009 Earthquake Engineering Design Standard. The greatest hazard is represented by the zones in which the expected earthquake intensity is 9 bals or higher. The map is shown in Figure 2-1.

---

[1] Джанузаков К.Д., Ильясов Б.И., Кнауф В.И., Королев В.Г., Христов Е.В. и Чедия О.К. (1977) Сейсмическое районирование Киргизской ССР. [Объяснительная записка к новой карте сейсмического районирования Киргизии масштаба 1:2 500 000]. (Seismic Zoning of the Kyrgyz SSR -Explanatory Note to the New 1:2,500,000-Scale Seismic Zoning Map of Kyrgyzstan]. Фрунзе: Илим (in Russian).

[2] Турдукулов А.Т. (ред.) (1996) Карта сейсмического районирования Кыргызской Республики (Seismic Zoning Map of the Kyrgyz Republic). Бишкек: Илим, 1996 (in Russian).

[3] Кальметьева З.А., Миколайчук А.В., Молдобеков Б.Д., Мелешко А.В., Жантаев М.М. и Зубович А.В. (2009). Атлас землетрясений Кыргызстана (Earthquake Atlas of Kyrgyzstan), ЦАИИЗ, Бишкек (in Russian).

[4] Абдрахматов К.Е. (ред.) (2011) Карта сейсмического районирования Кыргызской Республики (Seismic Zoning Map of the Kyrgyz Republic). Бишкек (in Russian).

A comparison of the seismic zoning map (1995) and the current map (2011) reveals substantial changes in how potential earthquake source zones were drawn and, consequently, how contour lines of various intensities were arranged. Major changes affected central part of the KR. For example, the Son-Kul-Naryn, Naryn-At-Bashy and other seismogenic zones increased intensity from 8 to 9 bals. A localized zone of the 9 bals intensity in the epicentral area of the 1992 Suusamyr earthquake was removed from the map.

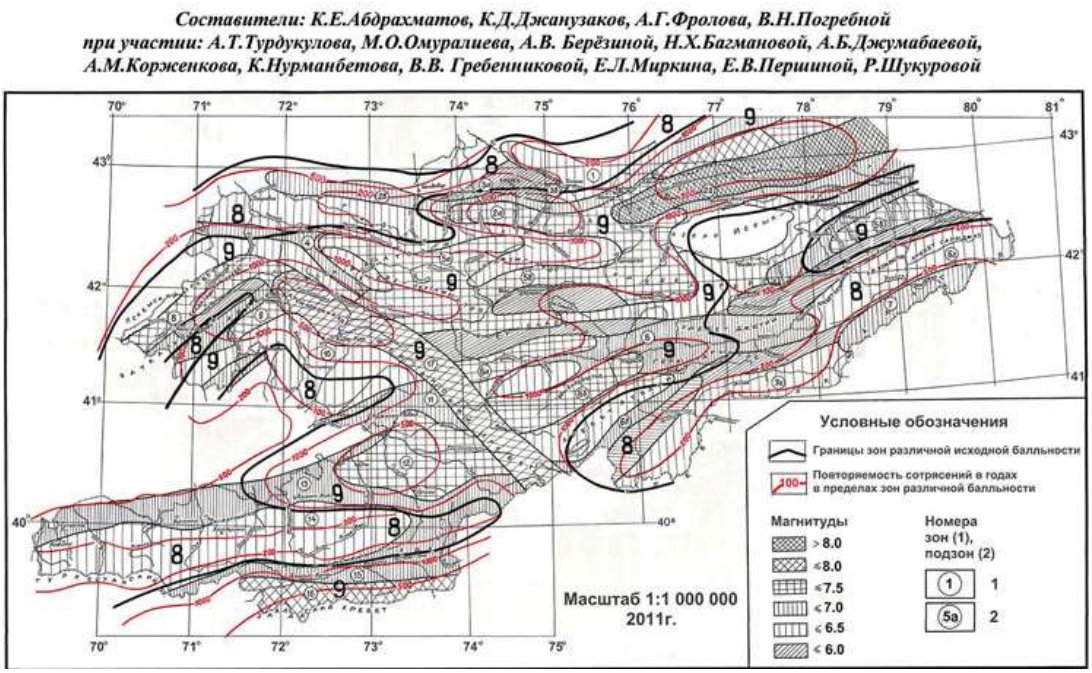

Figure 2-1. Current seismic zoning map for the Kyrgyz Republic (issued in 2012)[1]

Several international codes use seismic zoning maps which were developed using a probabilistic approach. This means that seismic hazard levels are defined in terms of the probability that a specified earthquake shaking level may be exceeded over an established time. An example is 10% probability of exceedance in 50 years, which is considered to provide a reasonable approximation of the maximum earthquake ground motion expected at a site. The probabilistic seismic hazard maps at regional scale computed for the KR (Abdrakhmatov et al., 2003[2]) show a peak ground acceleration of up to 4.5 m/s^2 with a 10% probability to be exceeded over the next 50 years, confirming the very high seismic hazard of the region.

A few international projects and activities related to seismic hazard assessment in the KR were performed in the last 20 years. Seismic hazard assessment of the KR territory was studied from 1998 to 2002 with the support of NATO's Science of Peace program. Subsequently, an EU funded DIPECHO project also studied seismic hazard in the KR from 2010 to 2012 (Moura, 2013[3]; Umaraliev, 2011[1]). Recommendations for improving Disaster

[1] http://www.seismo.kg/ru/kartasejsmicheskogorajonirovaniyaterritoriikyrgyzskojrespubliki

[2] Abdrakhmatov, K., H.B. Havenith, D. Delvaux, D. Jongmans & P. Trefois (2003). Probabilistic PGA and Arias Intensity maps of Kyrgyzstan (Central Asia), Journal of Seismology 7, 203–220

[3] Moura R., Umaraliev R., Almeida F., Abdrakhmatov K. (2013). Outcomes of the application of Multichannel Analysis of Surface Waves (MASW) for micro seismic hazard analysis within the improvement of the comprehensive risk assessment methodology, DIPECHO-VII, AKF/MSDSP KG, UPorto, Osh-Porto-Bishkek, 30.

Risk Reduction on regional and national levels have been brought to light in various UN documents (EC, ISDR, 2009[2]).

Earthquake Model for Central Asia (EMCA) project[3] (2011-2014) aimed at cross-border assessment of seismic risk in Central Asia, by working together with institutions and experts in the region. Seismic hazard assessment and microzonation were an important project component. The area sources for Central Asia within the EMCA model were developed by considering the pattern of crustal seismicity down to 50 km depth and as the position and strike distribution of known faults[4]. In order to provide an efficient approach that allows seismic risk monitoring, considering the rapid growth of the main Central Asian urban areas, the use of remote sensing data and other imaging sources were tested and applied within the framework of EMCA. The project was performed in collaboration with the Global Earthquake Model (GEM) and used the GEM Inventory Data Capture Tools (GEM IDCT) for data collection.

2.3 Seismic Design Approaches

2.3.1 Force-based versus performance-based seismic design approach

Force-based seismic design approach is currently prescribed for seismic design of new buildings by many international codes. According to that approach, structural elements are designed for the required resistance based on the applied seismic forces. These seismic forces are obtained as a result of linear elastic analysis which takes into account seismic hazard parameters, type of structural system and material, etc. Maximum earthquake-induced displacements in the building need to remain within the code-prescribed limits. The force-based approach is prescribed for seismic design of buildings and other structures in the KR by СНиП КР 20-02:2009.

During the last three decades, *performance-based* seismic design approach has emerged as an alternative to the force-based approach. The goal of performance-based seismic design is to ensure that the structure achieves predetermined *target performance* at specified seismic hazard level. The performance is an indicator of expected earthquake-induced damage in structural and non-structural elements, and it is usually quantified in terms of inelastic (plastic) deformations (rotations, displacements) in structural elements, e.g. plastic hinges in RC or steel beams. A more detailed explanation of the performance-based seismic design is provided in Section 2.5. This section is mostly focused on the force-based design approach and the corresponding seismic analysis procedures.

The force-based seismic design approach is based on the assumption of linear analysis which implies elastic structural response during earthquake ground shaking. The total seismic force for the structure, also known as base shear force, is determined by reducing the elastic seismic force using a force modification factor (also known as response modification factor). It is expected that, when seismic forces are reduced through force modification factor, the structure will demonstrate nonlinear behavior and experience inelastic deformations before the failure takes place. The force modification factor accounts for expected ductility, that is, ability of structure and its components to deform in non-linear

---

[1] Umaraliev R, Imanbekov S.T., Mirzaliev M., Ajibaev T.A. (2011). Outcomes of risk assessment from natural disasters, evaluation of fire safety and earthquake resistance at educational institutions in Chong-Alai rayon of Osh oblast, Kyrgyz Republic, DIPECHO-VI, AKF/MSDSP KG, Osh-Bishkek, 94.

[2] EC, ISDR, UN (2009a). Invest today for a safer tomorrow, 32, EC, ISDR, UN (2009b). Disaster Risk Reduction in the Central Asia, 35, EC, ISDR, UN (2009c). Good practices and tools on disaster risk reduction in education in Central Asia: compendium, 71.

[3] http://www.emca-gem.org/

[4] http://www.emca-gem.org/datasets/the-emca-area-source-model-for-central-asia-is-online/

manner during an earthquake. Some structures, like unreinforced masonry, are inherently brittle, hence force modification factor is close to unity. However, RC and steel structures are expected to perform in a ductile manner, hence a higher force reduction factor is assigned to these structures.

Reduction coefficient K_2 in СНиП КР 20-02:2009 is equivalent to the inverse value of the force modification factor, and its values range from 0.2 to 0.5. The K_2 value depends on the structural system and material, i.e. the value is different for frame and wall systems. Lower K_2 values are applied to systems which are expected to show larger ductility potential.

Figure 2-2 illustrates how a design seismic force can be obtained from the maximum elastic seismic force by applying the force modification factor (reduction coefficient) K_2.

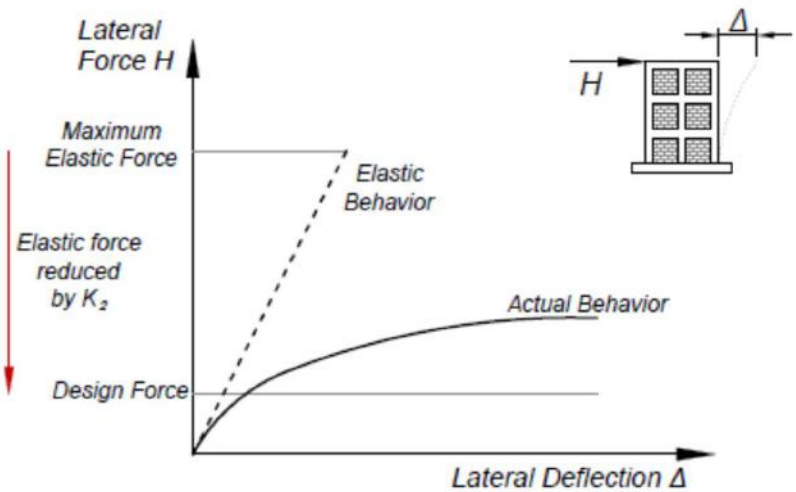

Figure 2-2. Elastic versus design seismic force (adapted from Murty 2010).

2.3.2 Limitations of the force-based seismic design approach for seismic evaluation and retrofit of existing buildings

Force-based seismic design approach is based on the linear analysis of a structure subjected to the design earthquake which corresponds to the code-prescribed seismic hazard parameters for the building site. The applied seismic forces are scaled down by a force modification factor (as discussed in the previous section). These force modification factors have been set based on the judgement and experience of code writers, and are based (to some extent) on experimental research studies and observed performance in past earthquakes. This approach assumes that a structure which is assigned a lower K_2 value is going to experience higher ductility than another structure designed for a lower K_2 value. A lower K_2 value thus signifies a higher potential for nonlinear seismic response, similar to curve “Actual behavior” in *Figure 2-2*. Seismic design provisions based on the force-based approach usually include requirements related to detailing of structural elements and quality (strength) of materials to ensure ductile seismic performance in line with the design assumptions.

Force-based seismic design approach is more feasible for new buildings, where designers have some control over structural configuration, detailing of structural elements, materials and construction quality. Existing buildings may have one or more seismic deficiencies and usually do not meet the requirements of current seismic codes. These seismic deficiencies depend on the structural system, construction material, and building age. In most cases, existing buildings do not have sufficient ductility potential, that is, they are unable to

experience significant nonlinear deformations before the failure. It may not be possible to capture lack of ductility potential through force-based approach which uses linear seismic analysis, and the same force modification factors are used for new and existing buildings characterized by the same structural system and material.

Seismic codes change over time, and these changes usually result in increased seismic forces due to more stringent requirements and improved understanding of seismic hazard in a country or region. Consequently, majority of existing buildings do not meet the resistance requirements when subjected to seismic forces determined based on the current seismic code. These seismic deficiencies (both in terms of ductility and resistance) have been documented in the retrofit case studies presented in this Manual (Chapters 5 and 6).

In some cases, the results of force-based approach using linear seismic analysis may show that an existing building is seismically deficient, but application of performance-based approach in conjunction with nonlinear analysis may demonstrate acceptable seismic performance. Nonlinear analysis provides a more realistic assessment of seismic demands in ductile structures. The conclusion of a nonlinear analysis may show that a structure has acceptable performance under specified seismic hazard. Performance-based design also gives more flexibility in determining “acceptable performance” for an existing building. For that reason, designers have used performance-based approach and nonlinear seismic analysis for assessment of existing structures (Brzev and Sherstobitoff, 2004; Mpampatsikos, Nascimbene, and Petrini, 2008; Fardis, Schetakis, and Strepelias, 2013). Nonlinear analysis results in a better understanding of inelastic structural behavior and its failure mechanism compared to the linear analysis. This understanding is critical in the stage when the most suitable retrofit scheme is selected based on the desirable failure mechanism of the retrofitted building.

Force-based design approach is based on the linear seismic analysis and may be feasible for buildings that have sufficient resistance to remain nearly elastic when subjected to the design earthquake demands, and/or buildings with regular geometries and stiffness and mass distributions. For all other buildings, estimations of earthquake-induced forces and displacements obtained from the linear analysis may be inaccurate (FEMA 274, 1997).

Some codes prescribe methods to determine limitations on use of linear analysis procedures for seismic rehabilitation of existing buildings, such as Cl 7.3.1.1 of ASCE/SEI (2014) . The purpose is to confirm that the expected level of nonlinearity is low. This can be established through Demand-Capacity Ratio (DCR) for critical structural elements. DCR is a ratio between internal force or bending moment due to gravity and earthquake loads, and the expected resistance of the structural elements. A structural element is expected to show inelastic behavior when DCR is greater than 1.0. ASCE/SEI (2014) permits the use of linear analysis procedures when DCR for critical structural elements is less than 2.0. Many older existing buildings are deficient in terms of the capacity of their structural elements and do not meet the current code requirements, hence linear elastic analysis may not be appropriate for assessing their seismic safety and selection of suitable retrofit schemes.

Limitations of the force-based seismic design approach in the context of seismic evaluation and retrofit of existing buildings have been discussed in several references (Fardis, 2009; FEMA 274, 1997; ASCE/SEI, 2014).

2.4 Seismic Design according to СНиП КР 20-02:2009

Seismic safety verification according to СНиП КР 20-02:2009 involves seismic analysis of the structure under consideration, as well as the resistance (capacity) verification for critical structural elements which are resisting the seismic effects. First, seismic analysis is performed to obtain values of internal forces and displacements. Next, a resistance

(capacity) check is performed to verify whether the structural elements have sufficient capacity to resist seismic effects at specific locations, e.g. end zone of the beam close to the column face. The capacity of a particular structural element (e.g. RC beam) is determined based on the applicable design code, e.g. СП 63.1330-2012 in case of RC structures. Demand-Capacity Ratio (DCR) is an indicator of capacity for a specific structural element. DCR is a ratio between internal force or bending moment due to gravity and earthquake loads, D, and the expected capacity of the structural element at specific location, C. Besides the capacity, it is important to ensure that the structure is not excessively flexible and that lateral displacements are within the limits prescribed by СНиП КР 20-02:2009 (as discussed later in this section).

Seismic analysis of buildings in the KR can be performed using one of the following methods: a) Spectral Method, or b) Dynamic Analysis Method using earthquake time history records (ground acceleration versus time); this is based on paragraph 5.2.10 of СНиП КР 20-02:2009. Both methods assume that material properties of a structure are characterized by linear elastic behavior. However, in reality building materials, such as masonry, reinforced concrete, and steel, show nonlinear behavior when subjected to earthquake shaking. This behavior can be simulated using nonlinear seismic analysis methods (either static or dynamic). According to СНиП КР 20-02:2009, Spectral Method can be used to perform seismic analysis for majority of buildings. Dynamic analysis method must be used for irregular buildings, buildings with seismic isolation devices, and/or buildings taller than 60 m. This provision applies to important structures which should remain undamaged during earthquakes, buildings with new construction technologies, and other types of buildings identified in the technical guidelines for the design of buildings and other structures.

2.4.1 Spectral Method

Spectral Method, also known as Modal Response Spectrum Analysis Method, is a linear seismic analysis method which assumes linear elastic material behavior for structure under consideration. First, a modal analysis is performed to determine the mode shapes and periods of the structure; subsequently, a response spectrum is used to determine the response for each mode. The response of each mode is independent from the other modes, and the modal responses can then be combined to determine the total structural response. These modal responses are internal forces and displacements. Paragraph 5.3.9 of СНиП КР 20-02:2009 prescribes that the total structural response should be obtained by the Root of the Sum of Squares (RSS) Method whereby the contribution of each mode is squared, and the square root is then taken of the sum of the squares. For more information on the Spectral Method refer to КНИИПСС (1996).

Seismic force is determined as follows (paragraph 5.3 of СНиП КР 20-02:2009):

$$S_{ik} = K_1 K_2 K_3 S_{0ik}$$

where

$$S_{0ik} = Q_k A \beta_i K_\psi \eta_{ik}$$

Where η_{ik} is distribution factor for mode *i* at point *k*, as follows:

$$\boldsymbol{\eta_{ik}} = \frac{\boldsymbol{X_i(x_k)} \sum_{j=1}^{n} \boldsymbol{Q_j X_i(x_j)}}{\sum_{j=1}^{n} \boldsymbol{Q_j X_i^2(x_j)}}$$

and $\boldsymbol{X_i(x_k)}$ and $\boldsymbol{X_i(x_j)}$ are modal displacements for mode *i* at points *k* and *j*, respectively.

Seismic force distribution, seismic weights, and modal shape parameters are shown in *Figure 2-3*.

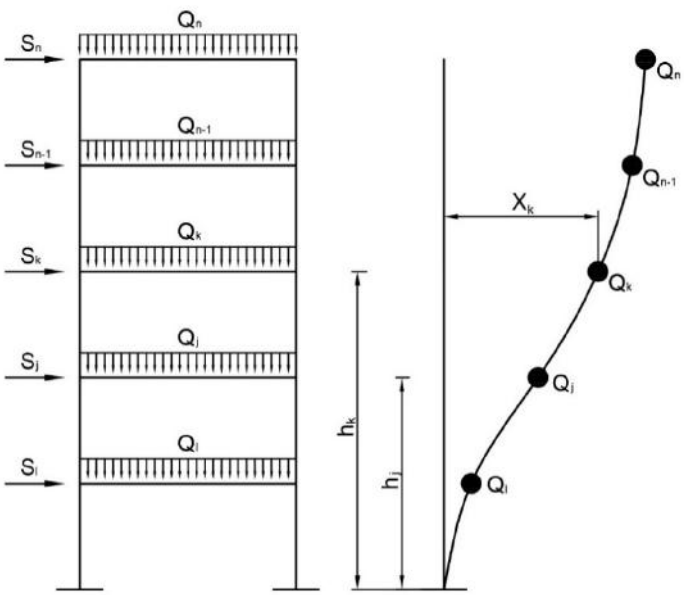

Figure 2-3. Seismic force parameters for a multi-story building model.

The main seismic analysis parameters are summarized in Table 2-2.

Seismic weight Q_k is calculated by considering the permanent (dead) load, long-term load (live load due to occupancy), and short-term live load (due to snow). Seismic weight is calculated based on provisions contained in paragraphs 5.2.14, 5.2.15, and 5.2.16 of СНиП КР 20-02:2009, and also СНиП 2.01.07-85*. Load reduction factor n_c is determined from Table 5.2 of of СНиП КР 20-02:2009. The values vary from 0.9 for self-weight to 0.8 for long-term load, 0.5 for short-term load, and for seismic load n_c = 1.0. It should be noted that self-weight of the structure must be multiplied by the coefficient of reliability γ_f which is larger than 1.0 and depends on the type of material.

Dynamic coefficient β depends on the fundamental period of the building *T* and the soil category (paragraph 5.3.3 of СНиП КР 20-02:2009), as shown in *Figure 2-4*. There are three soil categories: I, II, and III. Note that category I soil refers to rock while category III soil refers to loose sands and gravels. The soil properties need to be determined by means of experimental investigations.

Table 2-2. СНиП КР 20-02:2009 Seismic Analysis Parameters

Design parameter		СНиП КР 20-02:2009 reference
K_1 =	A coefficient regarding building function and importance (values range from 0.5 to 1.5)	Table 5.3
K_2 =	A reduction coefficient that depends on the type of structural system (values range from 0.2 to 0.5)	Table 5.4
K_3 =	Coefficient which depends on the building height (number of floors) (values range from 1 to 1.8)	Equation (5.3)
K_ψ =	Coefficient reflecting an ability of the structure to dissipate energy during an earthquake (values range from 1.0 to 1.3)	Table 5.6
A =	Seismic zone factor (for seismic action in horizontal or vertical direction) (ranges from 0.1 to 0.7 for horizontal direction)	Table 5.5
β_i =	Dynamic coefficient for the *i*-th vibration mode	Figure 5.1 and Table 5.7
η_{ik} =	Distribution factor for mode *i* at level *k* of the building	Equation (5.4)
Q_k =	Seismic weight at level *k*	

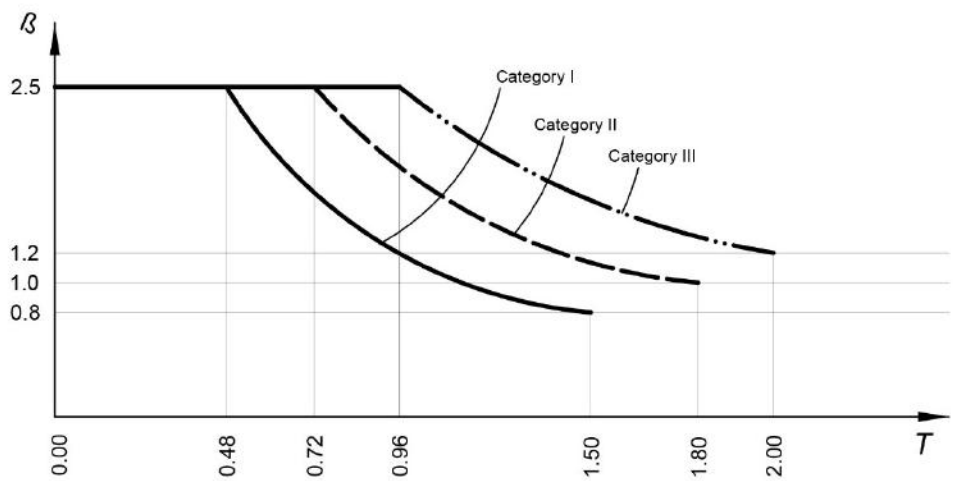

*Figure 2-4. Dynamic coefficient β versus fundamental period T (*СНиП КР 20-02:2009*).*

Fundamental period *T* needs to be determined according to paragraph 5.3.3 of СНиП КР 20-02:2009. There are several provisions which directly or indirectly control the value of fundamental period for new buildings. Interstory displacement limits in clause 5.4 indirectly restrict the fundamental period. Also, paragraph 6.1.16 restricts the fundamental period to maximum 0.4 sec for buildings located at sites with soil category III and seismic intensity of more than 9 bals.

Paragraph 5.2.6 of СНиП КР 20-02:2009 prescribes that the analysis needs to be performed taking into consideration spatial nature of earthquake action. In general, the seismic analysis

should be performed in two perpendicular horizontal directions of the building plan. Paragraph 5.2.7 identifies the types of structures for which the analysis needs to be performed for vertical direction of earthquake ground motion.

2.4.2 Seismic resistance (capacity) verification according to СНиП КР 20-02:2009

Paragraph 5.5 of СНиП КР 20-02:2009 prescribes the resistance (capacity) and stability check for the structure using the Limit States Design Method. Design provisions of material codes need to be used to perform the check. For example, design of reinforced concrete structures needs to be performed according to СП63.1330-2012, while the design of masonry structures needs to be performed in accordance with СП 15.13330.2012.

2.4.3 Verification of earthquake-induced lateral displacements according to СНиП КР 20-02:2009

An interstory seismic displacement Δ_k between floors *k* and *k+1* can be determined based on the average lateral displacements δ_{k+1} and δ_k at the levels *k+1* and *k*, as follows:

$$\Delta_{\boldsymbol{k}} = \boldsymbol{\delta_{k+1}} - \boldsymbol{\delta_k}$$

According to paragraph 5.4.3 of СНиП КР 20-02:2009 interstory displacements must be less than the following limit value:

$$\Delta_{\boldsymbol{k}} \leq h_k \cdot K_2 \cdot \varepsilon$$

Where:
h_k = floor height;
K_2 = a reduction coefficient that depends on the type of structural system (see Table 5.4 of SNiP KR 20-02: 2009);
ε = a coefficient which depends on the type of loadbearing structure and non-loadbearing walls in the building: ε = 0.02 when a separate action of loadbearing structure and non-loadbearing walls is ensured by design, or ε = 0.01 when the design does not ensure separate action of loadbearing structure and non-loadbearing walls.

For example, for frame systems K_2 = 0.3. When there is a separate action of frame and non-loadbearing walls ε = 0.02, hence $\Delta_{\boldsymbol{k}} \leq 0.006 h_k$.

The interstory displacement limit is intended to ensure that the building is not too flexible and to control damage in non-structural elements (partitions, glass components, etc.).

2.5 A Primer on the Performance-Based Seismic Design

2.5.1 Background

The objective of performance-based design approach is to base seismic design on the target *performance* at the predefined seismic hazard level. The performance is quantified through deformations (e.g. rotations and displacements) attained in the structural and non-structural elements. The approach is focused on displacements, which are considered as principal cause of earthquake damage. Performance-based approach can be used for seismic design of new buildings, as well as for seismic assessment and retrofit of the existing ones. There are several versions of performance-based design approach used in different codes and guidelines.

Performance-based seismic assessment and retrofit methods aim to guide design decisions based on the anticipated building performance during an earthquake, by taking into account

short-term costs and disruptions against the benefits of retrofitting. Performance-based seismic assessment is believed to be a superior approach as compared to force-based approach for informing decision-making about seismic retrofitting of a structure, and its use is expected to lead to more reliable and cost-effective retrofit decisions. Performance-based seismic design approach is explained in several publications, including Fardis (2009), Kunnath (2006), FIB (2003), and Naeim (2001).

Performance-based seismic assessment of structures often requires the use of nonlinear structural analysis. In some countries, seismic codes prescribe the use of nonlinear analysis for seismic assessment and retrofit of existing buildings, e.g. ASCE/SEI 41-13 in the USA (ASCE/SEI 2014) and Eurocode 8 (Part 3) which has been used within the European Union (EN 1998-3:2005). Sullivan, Priestley, and Calvi (2012) developed a model code for the displacement-based design of structures.

This section introduces the key concepts of performance-based design and nonlinear analysis procedures which are expected to be used in future seismic assessment and retrofit projects in the KR. The terminology related to performance-based design approach is explained in Glossary (Appendix B). Application of performance-based approach is illustrated through a retrofit case study in Chapter 5, along with the currently used force-based seismic design approach.

2.5.2 Seismic performance levels and seismic performance objectives

The expected seismic performance of a building can be described in several ways, including i) the extent of damage sustained by the building, which influences the safety of building occupants during and after an earthquake, ii) the cost and feasibility of restoring the building to pre-earthquake condition, iii) the length of time the building is not functional due to repairs, and iv) economic, architectural, and historic impacts on the community.

Building performance during an earthquake is characterized by the performance of structural and non-structural components. Structural performance refers to the condition of structural elements such as beams, columns, walls, foundations, etc. Structural performance is most often the primary consideration for seismic retrofitting, because poor structural performance or collapse could have extreme consequences on the safety of building occupants. However, damage or failure of non-structural components, such as partition walls, glass elements, chimneys, bookshelves, can also cause significant damage and injury of occupants.

It is important to make a distinction between the following two terms: performance level and performance objective.

The term *Performance level* means the physical condition of the building, its ability to function and protect occupants and contents, and have possible impacts on repair and/or replacement costs. The term *performance objective* expresses what performance levels are expected to be satisfied for specified seismic hazard at the building site. An example of a performance objective is: the building is expected to be heavily damaged but should not collapse during an earthquake with shaking intensity corresponding to a major earthquake.

Most building codes prescribe <u>performance objectives</u> either in implicit or explicit manner. For example, it may be expected that a well-designed and constructed structure should be able to:

a) Resist a minor level of earthquake ground motion without damage,
b) Resist a moderate level of earthquake ground motion without structural damage, but may possibly experience some non-structural damage, and

c) Resist a major level of earthquake ground motion having an intensity equal to the strongest expected intensity for the building site, without collapse, but may possibly experience some structural and non-structural damage.

The performance objective c) reflects the expected performance of a structure during a design earthquake it is designed for - according to majority of international seismic codes.

There are several possible performance levels, such as Immediate Occupancy, Life Safety, and Collapse Prevention (see Figure 2-5). Most international design standards provide guidance on the following three performance levels:

Immediate Occupancy (IO) – achieve essentially elastic behavior with minor repairable structural damage and minor damage to non-structural components.
Hospitals, emergency control centers, and any other facilities that must remain operational after an earthquake.

Life Safety (LS) – damage of structural and non-structural components may be extensive, but the risk of injury or casualties is minimal and exit of inhabitants from the building is accessible. Structural components may be significantly damaged e.g. significant cracking of concrete and masonry components, yielding of steel. Non-structural components may also experience damage. Extensive repair may be required for buildings from this performance level.
Most residential buildings are expected to perform at this level.

Collapse Prevention (CP) – the building is on the verge of collapse and it should maintain substantial, but not complete, life safety performance. Structural components are significantly damaged and perform at the level close to their ultimate capacity, and significant resistance and stiffness degradation may take place. Repair may or may not be feasible.
This performance level may be acceptable for some existing buildings.

Most seismic codes specify Life Safety performance level as requirement for new buildings, and in some cases for existing buildings. Acceptable performance of structural and non-structural components at different performance levels can be specified in terms of displacements, internal forces or stresses, accelerations, etc. Refer to FEMA (2000) and ASCE/SEI (2014) for more information.

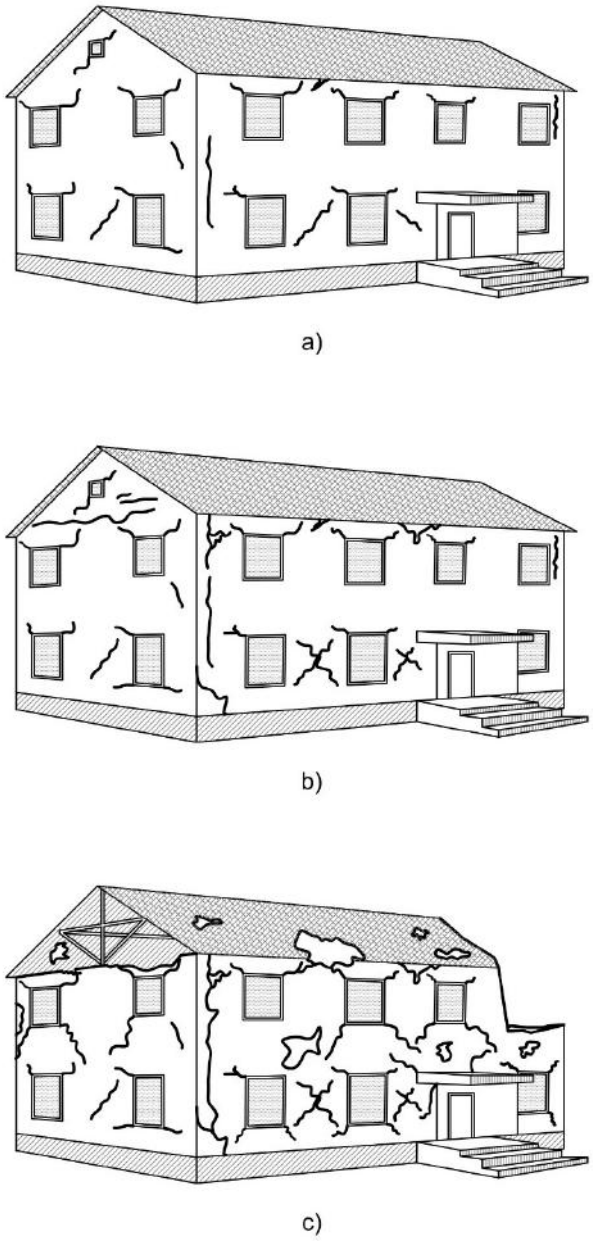

Figure 2-5. Seismic performance levels and the corresponding damage for masonry buildings: a) Immediate Occupancy (IO); b) Life Safety (LS), and c) Collapse Prevention (CP) (based on Grünthal, 1998).

It should be noted that a seismic safety margin will be different for brittle and ductile structures. *Figure 2-6* shows that all performance levels for a brittle structure are in elastic range, while for ductile structure these levels are in nonlinear (inelastic) range. As a result, a ductile structure will have more significant displacements before the failure (point F). The brittle structure is stronger, that is, it has a higher resistance but much smaller displacements than the ductile structure.

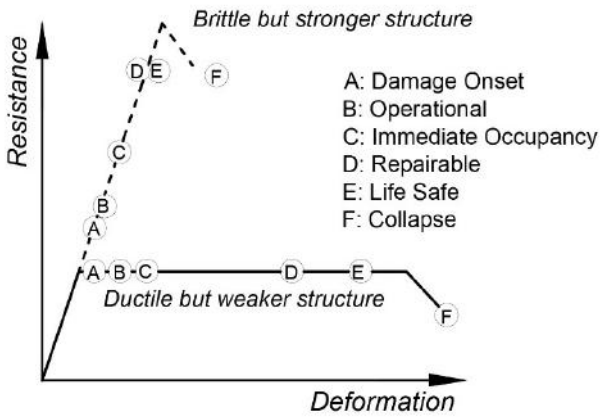

Figure 2-6. Illustration of possible performance levels for ductile and brittle structures (FIB 2003).

New school buildings are usually expected to perform at a Life Safety (or better) performance level (e.g. Immediate Occupancy). According to СНиП КР 20-02:2009, school buildings have a higher importance factor K_1 of 1.2 than other buildings (1.0). This an implicit way of setting higher seismic performance expectations for schools. It should be noted that the highest K_1 value (1.5) is assigned to public facilities, like theatres and sport arenas.

2.5.3 Nonlinear analysis procedures

Nonlinear seismic analysis procedures are commonly used in the context of Performance-Based Seismic Design. These procedures are primarily used to obtain a more realistic indication of the seismic behavior of building which is loaded significantly beyond the elastic range (compared to linear analysis procedures). Nonlinear analysis procedures are able to identify critical regions in which large deformations and damage may occur in a building, and in which particular care should be taken in design or retrofit stage. These nonlinear procedures provide more realistic estimates of force demands on potentially brittle elements, and more realistic estimates of deformations in ductile structural elements which are expected to deform inelastically (compared to linear analysis procedures).

A key feature of nonlinear analysis is that it simulates nonlinear behavior of key structural components, which is usually characterized through predefined stress-strain or force-deformation relationships. Nonlinear analysis procedures include: Nonlinear Dynamic Procedure and Nonlinear Static Procedure.

The Nonlinear Dynamic Procedure (NDP) consists of nonlinear Time-History Analysis. Numerical model of the building is subjected to several records of actual or artificial earthquakes. Time-History Analysis accounts for the effects of higher vibration modes. For a given earthquake record this approach produces the maximum global displacement demand due to the earthquake.

A limitation of the NDP is sensitivity to small changes in assumptions, with regard to either the character of ground record used in the analysis, or the nonlinear stiffness behavior of the elements. For example, two ground motion records enveloped by the same response spectrum can produce radically different results with regard to the distribution and amount of elasticity predicted in the structure. To improve reliability of this approach, it is necessary to perform several analyses, using varied assumptions. It is believed that the NDP requires considerable judgment and experience to perform.

The Nonlinear Static Procedure, also known as “Pushover Analysis”, uses simplified nonlinear techniques to estimate earthquake-induced deformations. Although the Pushover Analysis requires considerably more analysis effort than the linear static procedure, it usually provides an improved insight into the expected nonlinear behavior of the structure, and a better design information. The concept and process for performing Pushover Analysis as a part of seismic design or retrofit process will be discussed in the following section.

Nonlinear analysis procedures have been explained in several publications, including Deierlein, Reinhorn, and Willford (2010); Fardis (2009); and Naeim (2001).

2.5.4 Nonlinear static (pushover) analysis

2.5.4.1 The concept

The Pushover Analysis (PA) consists of applying static lateral forces incrementally to a mathematical model of the structure until the target performance has been attained. Building deformations and internal forces are monitored continuously as the model is laterally displaced. The PA is a displacement-based procedure where the basic parameter for the analysis is the lateral displacement of the building *d*, usually monitored at the roof level. Figure 2-7a) shows a building subjected to incrementally increasing lateral loading. The load resultant is equal to the seismic base shear force *V*. The corresponding load-displacement diagram (Figure 2-7b) shows both elastic (linear) and inelastic (nonlinear) building response, which is known as *Capacity Curve* (CC). A CC shows base shear versus global displacement for the structure (usually at the roof level) and is shown in Figure 2-8. The CC is a key output from the PA and it characterizes the seismic capacity of a building for an assumed lateral force distribution. *Target displacement* is a point on the CC which represents the maximum displacement likely to be experienced by the structure at the specified seismic hazard level, hence it correlates the seismic capacity of the building and the seismic hazard. The location of the target displacement relative to the predefined performance levels on the CC, e.g. Life Safety (LS), will indicate whether the predefined performance objective has been met. For example, target displacement shown in *Figure 2-8* exceeds the displacement corresponding to the Life Safety (LS) performance level, hence this structure could be assigned a Collapse Prevention (CP) performance level.

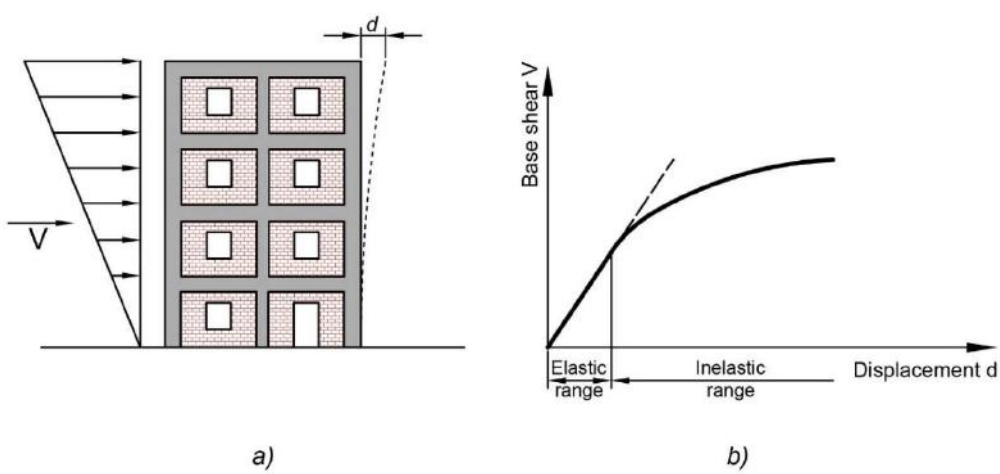

Figure 2-7. The Pushover Analysis procedure (based on Meslem, 2014).

In the course of a PA, a numerical model of the building is subjected to monotonically increasing lateral load until either a target displacement is reached or the building experiences collapse (ASCE/SEI 41-13; FEMA 356; FEMA 273). The target displacement can be calculated by any procedure that accounts for nonlinear response and damping effects. ASCE/SEI 41-13 (ASCE/SEI 2014) uses the Displacement Coefficient Method to

estimate target displacement. Alternatively, target displacement can be determined from the Capacity Spectrum Method, also known as the Acceleration-Displacement Response Spectra method (ADRS) (ATC-40, 1996).

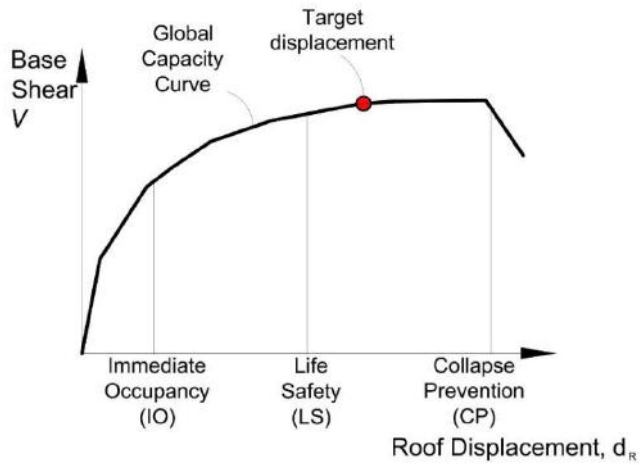

Figure 2-8. A sample Capacity Curve (CC) for a building, showing a possible target displacement relative to the predetermined performance levels.

PA has the following two key features: a) the nonlinear load-deformation behavior of individual components and elements is modeled directly in the numerical model, and b) the earthquake effect is quantified in terms of a target displacement. The PA enables the design engineer to identify the stages of most probable progressive failure in a building and identify the final failure mechanism. The PA is particularly useful for studies of existing buildings because it can predict potentially weak areas of the structure and progression of damage in key structural elements.

A limitation of the PA is that it cannot take into account the effect of higher vibration modes, hence it may not be suitable for analysis of high-rise buildings in which the influence of higher vibration modes may be significant.

Several useful technical resources explain the concepts and applications of PA, including FEMA 273 and 274 (1997), ATC-40 (1996), Kunnath (2006), Naeim (2001), and Fardis (2009).

2.5.4.2 Pushover analysis procedure

The procedure for performing the PA is explained through the following 7 steps:

Step 1

Create a nonlinear model of the building. Nonlinear moment-rotation or force-deformation properties need to be defined for each structural element which is expected to experience nonlinear behavior. Figure 2-9 shows a building modelled for the PA by assigning plastic hinges at specific locations within the key structural elements (e.g. beams). Plastic hinge properties for beams (assuming nonlinear flexural behavior) are characterized by moment-rotation relationship. A discussion on different plastic hinge properties is presented in Section 5.3.2.

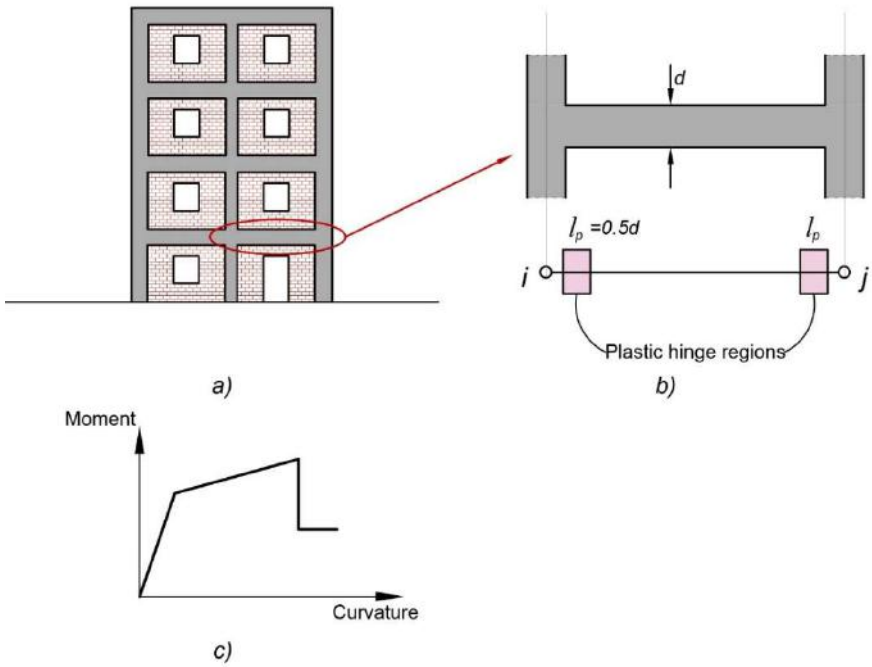

Figure 2-9. A building model for the PA showing plastic hinge properties for a typical beam (based on Meslem, 2014)

Step 2

The structure is subjected to gravity loads in the same load combination(s) as used in the linear analysis procedures before proceeding with the application of lateral loads. Gravity loads need to be applied as initial conditions for the nonlinear analysis procedure, and need to be maintained throughout the analysis. This is because superposition rules applicable to linear procedures do not, in general, apply to nonlinear procedures, and because the gravity loads may significantly influence the development of nonlinear response.

Step 3

The structure is subjected to a set of lateral loads. At least two analyses with different load patterns should be performed in each principal direction. The loading profile that is critical for one design quantity (e.g. internal forces) may differ from that which is critical for another design quantity (e.g. deformations). *Figure 2-10* shows possible lateral load patterns for PA: uniform load and inverse triangular distribution.

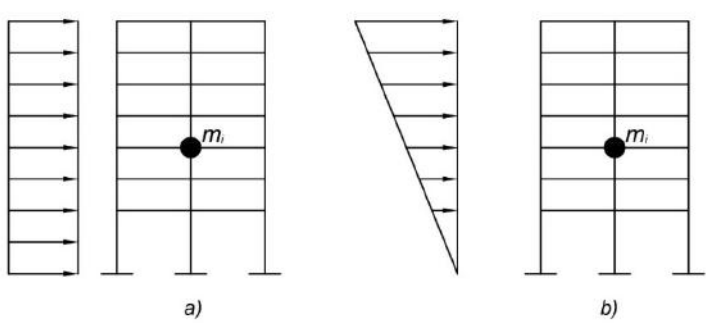

Figure 2-10. Two different lateral load patterns need to be used for the PA.

Step 4

The intensity of the lateral load is increased until the weakest component reaches the deformation at which its stiffness changes significantly (usually the yield load or member resistance). The stiffness properties of this "yielded" component are modified in the numerical model to reflect post-yield behavior, which is based on predefined plastic hinge properties. The modified structure is subjected to an increase in displacements, using the same shape of the lateral load distribution. *Figure 2-11* shows formation of the first flexural plastic hinge in the building model. The flexural plastic hinge is formed when the yield moment has been reached at the hinge location (see Figure 2-11).

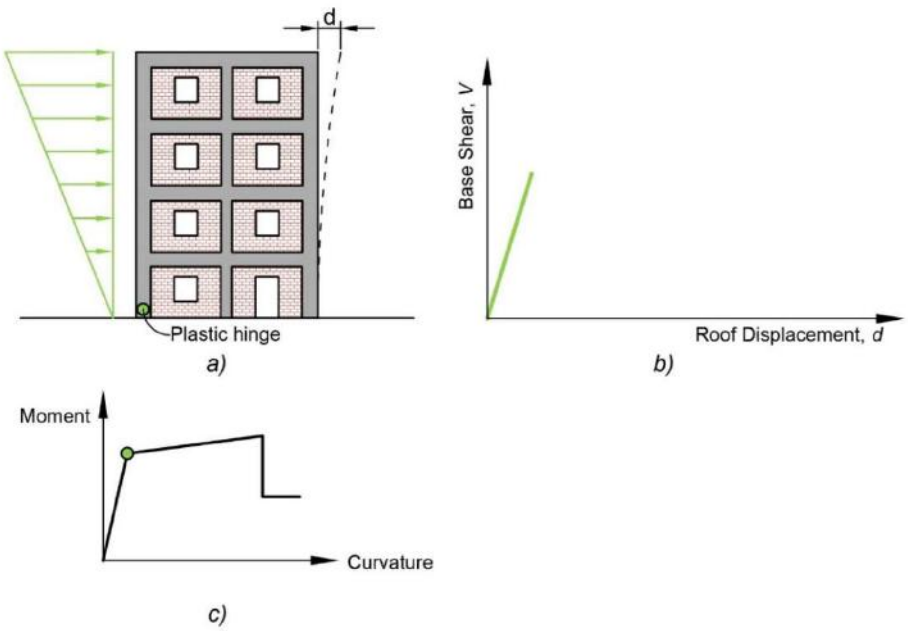

Figure 2-11. Formation of the first plastic hinge in the model.

Step 5

Step 4 is repeated as more and more components reach their capacity. Although the intensity of loading is gradually increasing, the load pattern usually remains the same for all stages of the "yielded" structure. At each stage, internal forces and elastic and inelastic deformations are calculated for all components. Structural performance at the ultimate stage, characterized by several plastic hinges formed throughout the building, is illustrated in Figure 2-12.

The forces and deformations from all previous loading stages are accumulated to obtain the total forces and deformations (elastic and inelastic) of all components at all loading stages.

Step 6

The loading process continues until either unacceptable performance is detected or a control node displacement is larger than the target displacement expected in the design earthquake at the control node.

Steps 4 through 6 can be performed systematically with a nonlinear computer analysis program using an incremental analysis with predetermined displacement increments in which iterations are performed to balance internal forces.

Step 7

The displacement of the control node versus the base shear at various loading stages is plotted as a representative nonlinear response curve. The changes in slope of this curve are

indicative of the yielding in various components. Once the target displacement is determined and displayed on the curve, the corresponding forces and deformations should be used to evaluate the performance of components and elements (relative to predetermined performance levels, e.g. Life Safety).

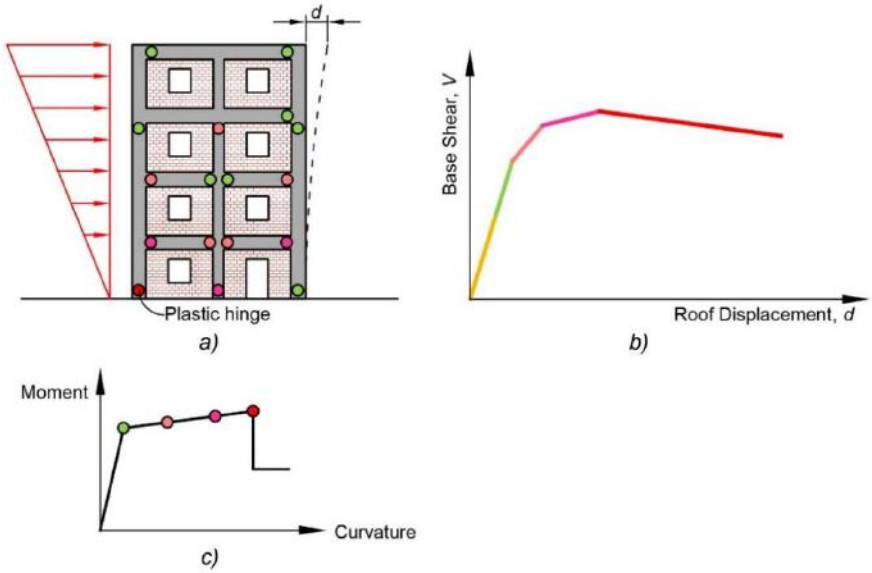

Figure 2-12. Model at the ultimate (failure) stage showing plastic hinges at different performance levels.

2.6 Seismic Analysis of Nonstructural Building Elements

Buildings consist of structural and nonstructural elements. Structural elements are a part of the structural gravity- or lateral-load-resisting system. Nonstructural elements include all building parts and contents which are attached to the structure but are not considered to be a part of a structural system (Porter, 2005). Nonstructural elements include permanent parts of the building, such as architectural, mechanical, electrical and plumbing systems and components. In addition, nonstructural elements also include building contents, e.g. furniture, equipment, and lighting fixtures. Common nonstructural elements in schools include ceilings, lights, windows, office equipment, computers, air conditioners, electrical equipment, and anything stored on shelves (e.g. library books) or hung on walls.

In an earthquake, nonstructural elements may move, become unhooked, thrown about, and tipped over; this can cause injury and loss of life, extensive damage, and interruption of building function. For example, window glass may implode and litter a classroom or a corridor, causing casualties and/or fatalities. Lighting fixtures may fall and break if they are not secured by safety chains. Chemicals stored in glass containers in the labs may overturn, break and release toxic fumes. Water pipes may break and flood the building. Bookcases and free-standing cupboards may fall over. Seismic vulnerability of nonstructural elements which caused significant financial losses and casualties in past earthquakes is well documented (Kao, Soong, and Amanda, 1999). A few reconnaissance reports related to the U.S. earthquakes, e.g. 1994 Northridge, California earthquake (magnitude 6.7) (Naeim, 1999; McKevitt, Timler, and Lo, 1995) and the 2001 Nisqually, Washington earthquake (magnitude 6.8) (Filiatrault et al., 2001). Damage and losses due to inadequate performance of nonstructural elements were also reported after the 2010 Maule, Chile earthquake (magnitude 8.8) (Miranda et al., 2012). In the 1999 Kocaeli, Turkey earthquake, unanchored free-standing cabinets caused 8,000 out of 80,000 casualties (Petal, 2004). A detailed database on seismic damage and cost information for nonstructural elements was developed by Taghavi and Miranda (2003).

Seismic response of nonstructural elements has been discussed by ATC (1999) and Naeim (2001). Based on their expected behavior in an earthquake, nonstructural elements can be classified either as *deformation sensitive* or *acceleration sensitive*. If the seismic performance of a nonstructural element is controlled by the supporting structure's interstory displacements (drift), the element is considered deformation sensitive (for example, partition walls and glass panels). Seismic safety of deformation sensitive elements can be achieved either by limiting interstory drift of the supporting structure or ensuring that nonstructural element can accommodate the expected lateral displacements without damage.

Nonstructural elements which are not deformation sensitive are usually acceleration sensitive, and are vulnerable to sliding or overturning. For example, mechanical equipment fixed to the floor is acceleration sensitive. Seismic safety of acceleration sensitive elements can be achieved by providing restraints to prevent their sliding, overturning or collapse.
Forces and displacements are induced in nonstructural elements due to the swaying of a building in an earthquake. Seismic forces acting on nonstructural elements depend on the ground acceleration at the base of the building, the ratio of the floor acceleration at the location of the nonstructural element and the ground acceleration, and the dynamic amplification caused by the resonance between the nonstructural element and the building response (ASCE/SEI 41-13, 2014). In most cases, these forces are applied at the center of mass of the nonstructural element, and equivalent static force analysis can be performed to determine the displacements and internal forces for seismic design or retrofit. This is an approximate/simplified method of analysis and it is prescribed by several international seismic codes. One of the assumptions of the simplified method is a linear variation of floor accelerations over the building height, which is based on the assumed first mode response of a building. For buildings with significant higher mode response, this assumption may result in overestimating accelerations at the higher floors. In that case, modal response spectrum analysis may be required to estimate the variation of floor accelerations. Linear dynamic analyses, such as modal response spectrum analysis, time history analysis, and nonlinear analysis are refined analysis methods which deal with the dynamic behavior of the building. The use of refined analysis methods is recommended for the design of restraints for the equipment items which are critically sensitive to force and displacement effects of an earthquake, or where the mass of a nonstructural element is large enough to affect the seismic response of the structure (e.g. at least 10 % of the total weight of the structure) (CSA S832-14, 2014).

Some nonstructural elements may significantly contribute to repair costs, casualties/fatalities, or interruption of building function after an earthquake. Performance-based design approach can be used to accurately assess seismic performance of nonstructural elements and predict the corresponding damage and losses. Several research studies have been performed related to that subject and advancements have been made in the last few decades (Porter et al., 2014; FEMA P-58-1, 2012; Taghavi and Miranda, 2003). Under the Global Earthquake Model (GEM) initiative, an analysis procedure for simulating structural response, damage, and repair cost for structural and nonstructural elements in the context of seismic vulnerability of building classes was proposed (Porter et al., 2012; 2014). ATC-58 project developed a methodology for seismic performance assessment of structural and nonstructural elements of individual buildings that accounts for uncertainty in ability to accurately predict response, and communicates performance in ways that better relate to the decision-making needs of stakeholders (FEMA P-58-1, 2012).

Seismic assessment and retrofit approaches for nonstructural elements in existing buildings are addressed by U.S. code ASCE/SEI 41-13 (2014), while ASCE/SEI 31-03 (2003) prescribes seismic evaluation procedures and checklists. Canadian standard CSA S832-14 (2014) describes approaches for identifying and evaluating hazards caused by nonstructural elements in new and existing buildings and provides strategies for damage mitigation.

Eurocode 8, Part 1 (EN 1998-1:2004, 2004) covers seismic design of nonstructural elements in new buildings.

Several guidelines which cover seismic retrofitting techniques for nonstructural elements in schools have been developed in the USA (FEMA 241, 2015; CAL, 2011) and Japan (EFRC, 2005). Also, a general guideline for reducing the risk of nonstructural damage was developed in the USA (FEMA E-74, 2012).

Seismic design considerations for nonstructural elements have been included in SNiP KR 20-02:2009 Para 6.4. The code outlines prescriptive provisions for restraining nonstructural elements for providing separation gaps to prevent or minimize earthquake damage. There are currently no code provisions related to determining seismic design forces in nonstructural elements.

2.7 References

ASCE/SEI (2014). Seismic Evaluation and Retrofit of Existing Buildings. ASCE standard ASCE/SEI 41-13, American Society of Civil Engineers, Reston, VA, USA.

ASCE/SEI (2003). Seismic Evaluation of Existing Buildings. ASCE standard ASCE/SEI 31-03, American Society of Civil Engineers, Reston, VA, USA.

ATC (1999). Briefing paper 5 – Seismic Response of Nonstructural Components. Built to resist earthquakes, Applied Technology Council/SEAOC Joint Venture, Redwood City, CA, USA.

ATC-40 (1996). Seismic Evaluation and Retrofit of Concrete Buildings (ATC-40), Volume 1. Applied Technology Council, Redwood City, California, USA.

Bachmann, H. (2003) Seismic Conceptual Design of Buildings – Basic Principles for Engineers, Architects, Building Owners, and Authorities (printed copy in colour can be ordered @ www.nicee.org)

Brzev, S. and Sherstobitoff, J. (2004). Performance-based seismic evaluation of concrete reservoir structures. Proceedings of the 13th World Conference on Earthquake Engineering, Vancouver, Canada, Paper No. 1823.

CAL (2011). Guide and Checklist for Nonstructural Earthquake Hazards in California Schools. A project of California Emergency Management Agency (Cal EMA), Department of General Services, Division of State Architect, Seismic Safety Commission, and Department of Education, CA, USA.

CSA S832-14 (2014). Seismic Risk Reduction of Operational and Functional Components of Buildings. Canadian Standards Association, Mississauga, ON, Canada.

Deierlein,G.G., Reinhorn,A.M., and Willford,M.R. (2010). Nonlinear Structural Analysis for Seismic Design: A Guide for Practicing Engineers, NEHRP Seismic Design Technical Brief No. 4, NIST GCR 10-917-5, National Institute for Standards and Technology, USA.

EFRC (2005). Case Studies of Seismic Nonstructural Retrofitting in School Facilities. Educational Facilities Research Center and National Institute for Educational Policy Research, Japan.

EN 1998-3:2005 (2005). Eurocode 8: Design of structures for earthquake resistance – Part 3: Assessment and retrofitting of buildings and bridges. European Committee for Standardization, Brussels, Belgium.

EN 1998-1:2004 (2004). Eurocode 8: Design of Structures for Earthquake Resistance – Part 1: General Rules, Seismic Actions and rules for buildings, European Committee for Standardization, Brussels, Belgium.

Fardis, M., Schetakis, A., and Strepelias, E. (2013). RC buildings retrofitted by converting frame bays into RC walls, Bulletin of Earthquake Engineering, 11: 1541-1561.

Fardis, M. (2009). Seismic Design, Assessment and Retrofitting of Concrete Buildings: Based on EN-Eurocode 8, Springer, Dordrecht, Germany.

FEMA P-58-1 (2012). Seismic Performance Assessment of Buildings Volume 1 – Methodology. Federal Emergency Management Agency, Washington, DC, USA.

FEMA E-74 (2012). Reducing the Risks of Nonstructural Earthquake Damage – A Practical Guide. Federal Emergency Management Agency, Washington, DC, USA.

FEMA 241 (2015). Identification and Reduction of Nonstructural Earthquake Hazards in Schools. Federal Emergency Management Agency, Washington, DC, USA.

FEMA 273 (1997). NEHRP Guidelines for the Seismic Rehabilitation of Buildings (FEMA 273). Washington D.C., USA.

FEMA 274 (1997). NEHRP Commentary on the Guidelines for the Seismic Rehabilitation of Buildings (FEMA 274). Washington D.C., USA.

FEMA 356 (2000). Prestandard and Commentary for the Seismic Rehabilitation of Buildings (FEMA 356). Washington D.C., USA.

FIB (2003). Seismic Assessment and Retrofit of Reinforced Concrete Buildings, State-of-the-art report, Bulletin 24, Lausanne, Switzerland.

Filiatrault, A., Uang, C.-M., Folz, B., Christopoulos, C., and Gatto, K. 2001. Reconnaissance report of the February 28, 2001 Nisqually Seattle-Olympia) earthquake. Department of structural engineering, University of California, San Diego, La Jolla, CA.

Grünthal G. (ed.), Musson R M W, Schwarz J, Stucchi M (1998). European Macroseismic Scale 1998. Cahiers du Centre Européen de Géodynamique et de Séismologie, Volume 15, Luxembourg.

Kao, Andrew S., Soong, T. T., and Amanda, V. 1999. Nonstructural damage database. Report MCEER-99-0014, Multidisciplinary Center for Earthquake Engineering, Buffalo, NY, USA.

КНИИПСС (1996). Проектирование Зданий и Сооружении в Сейсмических Районах (Design of Buildings and Structures in Seismic Zones), Bishkek, Kyrgyz Republic (in Russian).

Kunnath, S. (2006). Performance-Based Seismic Design and Evaluation of Building Structures, Chapter 5, Earthquake Engineering for Structural Design, Edited by W.F. Chen and E.M. Lui, CRC Press, USA.

Meslem, A. (2014). Nonlinear Static Analysis. Indo-Norwegian Training Programme on Nonlinear Modelling and Seismic Response Evaluation of Structures, Indian Institute of Technology Roorkee, India.

McKevitt, W.E., Timler, P.A.M., and Lo, K.K. 1995. Nonstructural damage from the Northridge earthquake. Canadian Journal of Civil Engineering, 22(2): 428-437.

Miranda E., Gilberto M., Rodrigo R., and Gokhan P. 2012. Performance of nonstructural components during the 27 February 2010 Chile Earthquake. Earthquake Spectra, 28(S1): S453-S471.

Mpampatsikos, V., Nascimbene, R., and Petrini, L. (2008). A Critical Review of the R.C. Frame Existing Building Assessment Procedure According to Eurocode 8 and Italian Seismic Code, Journal of Earthquake Engineering, 12(S1): 52-82.

Naeim, F. (1999). Lessons learned from performance of nonstructural components during the January 17, 1994 Northridge earthquake--Case studies of six instrumented multistory buildings. Journal of seismology and earthquake engineering, 2(1): 45-57.

Naeim, F. (2001). The Seismic Design Handbook, 2nd Edition, Kluwer Academic Publisher, USA.

Petal, M.A. (2004). Urban Disaster Mitigation and Preparedness: the 1999 Kocaeli Earthquake. Ph.D. dissertation, University of California, Los Angeles, CA, USA.

Porter, K., Farokhnia, K., Vamvatsikos, D. and Cho, I.H. (2014), Guidelines for component---based analytical vulnerability assessment of buildings and nonstructural elements, GEM Technical Report 2014---1, V1.0.0, 102 pp., GEM Foundation, Pavia, Italy.

Porter, K.A., Farokhnia, K., Cho, I.H., Rossetto, T., Ioannou, I., Grant, D., Jaiswal, K., Wald, D., D'Ayala, D., Meslem, A., So, E., Kiremidjian, A.S. and Noh, H. (2012). Global Vulnerability Estimation Methods for the Global Earthquake Model, Proceedings of the 15th World Conference on Earthquake Engineering, Lisbon, Portugal.

Porter, K.A. (2005). A Taxonomy of Building Components for Performance-Based Earthquake Engineering. PEER Report 2005/03, Pacific Earthquake Engineering Research Center, College of Engineering, University of California, Berkeley, CA, USA.

Sullivan,T.J., Priestley,M.J.N., and Calvi,G.M. (2012). A Model Code for the Displacement-Based Seismic Design of Structures (DBD12), IUSS Press, Pavia, Italy.

Taghavi, S., and Miranda, E. (2003). Response Assessment of Nonstructural Building Elements, PEER 2003/05, Pacific Earthquake Engineering Research Center, Richmond, CA, USA.

СН-8-57. Нормы и правила строительства в сейсмических районах (Norms and Rules for Construction in Seismic Regions), Государственный комитет Совета Министров СССР по делам строительства. State Committee of Council of Ministers of the USSR for Construction, Moscow, USSR (in Russian).

СНиП 2.01.07-85*. Нагрузки и воздействия (Loads and Effects). State Building Committee of USSR (Gosstroi of USSR), Moscow, USSR (in Russian and English)

СНиП 22-01-98 КР Оценка сейсмостойкости зданий существующей застройки (Assessment of seismic safety of buildings). Минархстрой Кыргызской Республики, Bishkek, Kyrgyz Republic (in Russian).

СНиП II-7-81. Строительство в сейсмических районах. Нормы проектирования. Госстрой, Moscow, USSR (in Russian).

СНиП КР 20-02:2009. Сейсмостойкое строительство. Нормы проектирования ((Earthquake engineering design standard). Государственное Агентство По Архитектуре И Строительству При Правительстве Кыргызской Республики, Bishkek, Kyrgyz Republic (in Russian).

СП 15.13330.2012. Каменные и Армокаменные Конструкции (Masonry and Reinforced Masonry Structures). Министерство Регионального Развития Российской Федерации, Moscow, Russia (in Russian).

СП 63.1330-2012. Бетонные и железобетонные конструкции (Concrete and Reinforced Concrete Structures Principal Rules). Министерство Регионального Развития Российской Федерации, Moscow, Russia (in Russian).

3 Building Typologies for Schools in the Kyrgyz Republic

3.1 Introduction

The purpose of this chapter is to describe prevalent building typologies for school buildings in the KR, including their key structural and non-structural elements. It is important to understand their *seismic response*, that is, how these buildings would behave when subjected to a damaging earthquake. Some of these building typologies were exposed to earthquakes in the Central Asia and former Soviet Union, or other parts of the world. Based on these observations, as well as general principles of earthquake-resistant design of buildings, it is possible to identify their *seismic deficiencies* which served as the basis for selecting retrofitting techniques which are discussed later in this Manual.

3.2 Earthquake Effects on Buildings

When earthquake shaking occurs, a building gets thrown from side to side and/or up and down. While the ground is violently moving from side to side, the building tends to stand at rest, like a passenger standing in a bus that accelerates quickly. The building tends to continue to move in the same direction, but by this time the ground is moving back in the opposite direction (as if the bus driver first accelerated quickly, then suddenly braked). Internal forces in a building caused by vibration of the building's mass during earthquake shaking are called *inertial forces*.

Building movements during an earthquake are illustrated in *Figure 3-1*. It can be seen that ground shaking is transferred to the building through its foundation (illustrated by black arrows). Note that the inertial forces (illustrated by red arrows) act in opposite direction to the ground motion. The building's mass, size, and shape influence the magnitude of these inertial forces and their distribution.

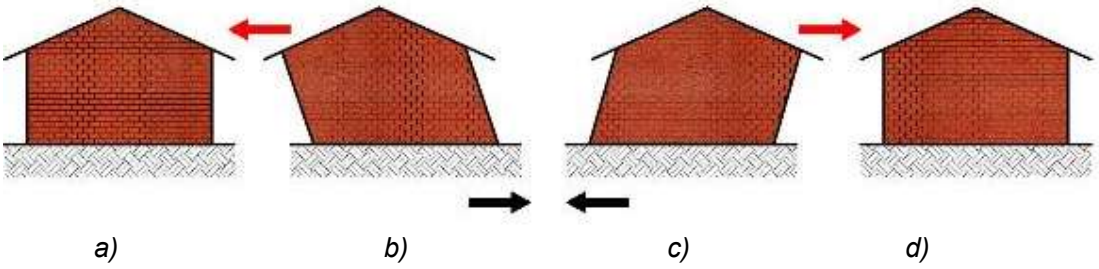

Figure 3-1. Building response to earthquake motion: a) building at rest; b) ground accelerates to right; c) ground accelerates to left, and d) ground and building at rest.

According to the Newton's Second Law, inertial forces are equal to the product of mass and acceleration. Mass (*m*) refers to an overall mass of the building and it is one of its inherent characteristics. It should be noted that inertial forces are distributed in the building depending on the mass distribution along its height. A major portion of the total building mass is concentrated at floor and roof levels. Since inertial forces are proportional to the mass, an increase in the mass generally results in an increase in the inertial force, hence it is beneficial to construct lightweight structures at building sites characterized by high seismic hazard. The other component of the inertial force, acceleration (*a*), denotes the change of velocity (or speed in a certain direction) over time and is a function of the nature of the earthquake and seismic hazard of the specific building site. The acceleration is usually expressed as a fraction of acceleration of gravity (*g*). Reference acceleration is usually the maximum acceleration at the ground, which is known as Peak Ground Acceleration (PGA). Different parts of the building (e.g. different floor levels) will experience different

accelerations. Accelerations increase up the building height, and they are highest at the roof level. This is illustrated in *Figure 3-2*. It should be noted that magnitudes of accelerations also depend on the building flexibility. For example, accelerations in tall buildings may be smaller in magnitude than accelerations in rigid (less flexible) low-rise buildings such as masonry buildings with thick walls, where maximum accelerations may be on the order of 2.5 to 3.0 times the PGA. It should be noted that tall buildings may experience significant lateral deformations, which may result in damage to non-structural elements (e.g. glass or partition walls). On the other hand, displacements in rigid buildings may be relatively small.

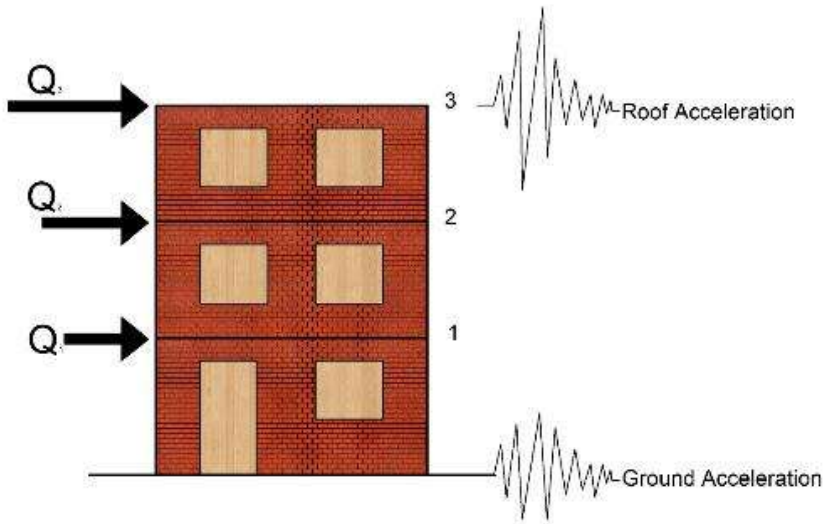

Figure 3-2. Variation of accelerations and seismic forces along the building height.

The inertial forces are applied (external) forces and need to be resisted by the main structural elements which are designated to be a part of the Lateral Load-Resisting System (LLRS) in a specific building. LLRS comprises the key structural elements which are responsible for resisting lateral loads such as wind and earthquakes. There are several possible LLRSs for each construction material (steel, concrete, masonry, timber), including wall systems in masonry and reinforced concrete (RC) buildings, frame systems in steel and RC buildings, etc. Seismic performance of the building depends on how well these structural elements were designed and constructed. Seismic code in a specific country prescribes the requirements for seismic design of structural elements in buildings with different LLRSs. In the KR, СНиП КР 20-02:2009 prescribes the requirements for seismic design of new buildings and evaluation or retrofit of existing buildings. Table 5.4 of СНиП КР 20-02:2009 identifies 7 different LLRSs for buildings, including precast large panel buildings, precast frame and frame-wall buildings, etc.

A well-designed and well-constructed building is expected to perform in a *satisfactory manner* in a *design level earthquake*, which is usually prescribed by the seismic code through seismic hazard parameters for the specific building site (city, town, neighborhood). According to seismic codes in most countries, *satisfactory manner* means that life safety of occupants must be ensured, but the building may experience significant damage when subjected to a severe earthquake. However, it is very likely that an actual earthquake may have different (possibly higher) seismic hazard characteristics than the design earthquake prescribed by the seismic code. A building may be able to resist the effects of such a severe earthquake without collapse, provided that design and detailing were performed such as to ensure *ductile behavior* of its LLRS. Alternatively, the structure could experience *nonductile behavior* if one or more critical elements experience a brittle failure, which occurs suddenly and cause the overall building collapse. Figure 3-3 illustrates a difference between ductile and nonductile seismic behaviour. Clearly, ductile behavior is desirable since it ensures that

the structure can sustain several cycles of earthquake ground shaking without failure, hence the requirements for ductile design and detailing for various LLRSs are prescribed by seismic codes. In general, it is possible to achieve ductile seismic performance by most LLRSs, including structures made of RC, reinforced or confined masonry, steel and wood. On the other hand, a brittle failure is sudden and catastrophic and should be avoided by all means. Many older existing buildings designed according to the seismic codes which did not include requirements for ductile design and detailing may be susceptible to brittle failure of its structural elements and may need to be retrofitted. For example, unreinforced masonry buildings have an LLRS characterized by a brittle seismic performance.

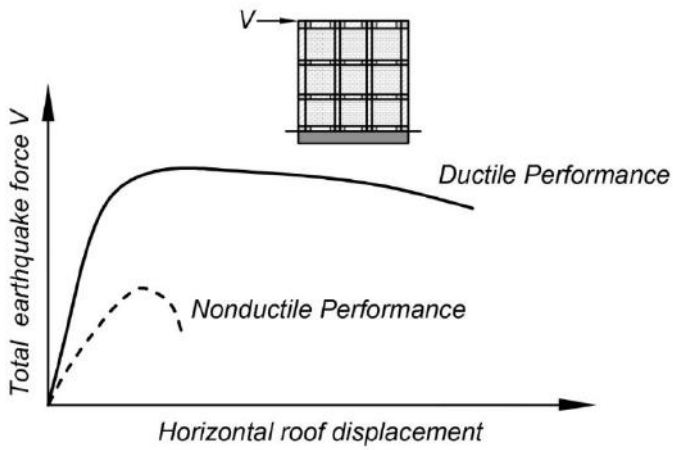

Figure 3-3. Ductile versus nonductile seismic performance of buildings (adapted from Murty, 2010).

3.3 Seismic Deficiencies

When a building did not perform in "satisfactory manner" during an earthquake, it means that it had suffered excessive or unacceptable damage; this may be referred to as "unsatisfactory seismic performance". This unsatisfactory performance could occur due to a higher earthquake shaking than prescribed by the code, or due to a flaw in design or construction which is referred to as *seismic deficiency*. It is common to observe one or more seismic deficiencies in older existing buildings. These seismic deficiencies are often characteristic for a specific building typology but may not be common for other typologies. For example, masonry buildings may have different deficiencies than RC frame buildings. Common seismic deficiencies characteristic for different building typologies will be discussed in this section. The classification of seismic deficiencies presented next has been adapted from FEMA 547 (2006). The seismic deficiencies may be related to i) global capacity, ii) global stiffness, iii) building configuration, iv) load path, v) detailing of structural elements, vi) horizontal diaphragms, vii) foundations, viii) pounding effects, and ix) deterioration of structural elements. Various seismic deficiencies and the corresponding mitigation approaches (retrofit techniques) will be explained in more detail in the context of seismic retrofit in Chapter 4.

Global Capacity

Global capacity usually refers to the lateral resistance of the vertical elements of LLRS, e.g. masonry walls or RC frames. A deficient global capacity is usually found in older existing buildings designed according to older seismic codes. In most cases, seismic hazard parameters for the same building site may be different in current codes than in the older codes. This may result in higher seismic forces prescribed by the newer codes which in turn may require higher global capacity for the building.

Global Stiffness

The criterion for global stiffness is implicitly prescribed by the seismic codes by setting the maximum lateral drift (displacement) limits. It is expected that the buildings are not excessively flexible in order to prevent damage in non-structural elements (e.g. partitions, glass surfaces, etc.). These displacement limits are usually determined at inter-story level and are referred to as inter-story drift (a ratio of relative displacements between floors and floor height).

Building Configuration (structural irregularities)

Building configuration, or the general vertical and/or horizontal shape of a building, is an important factor influencing earthquake performance and damage. Buildings with simple, regular, symmetric configurations generally display the best performance in earthquakes. The reasons for this are twofold, that is, (i) non-symmetric buildings tend to twist in addition to shaking laterally, and (ii) the various “wings” of a building tend to act independently, resulting in differential movements, cracking, and other damage.

Structural irregularity is a feature of a building's structural arrangement. For example, one story may have significantly larger height than other stories, or building may have an irregular plan shape, or there could be a change of structural system or material that produces a known vulnerability during an earthquake[1]. Buildings can be irregular with regard to the horizontal plane (plan irregularities) or elevation (vertical irregularities). One of the most common irregularities for masonry buildings is a non-symmetrical wall layout with regard to principal axes of the building plan; this may cause torsional effects and increased seismic forces in some walls. It has been observed that some school buildings in the KR have irregular plan shape (e.g. H-shape), but in the design stage the buildings were separated into rectangular-shaped building blocks by vertical joints (known as “seismic gaps”). It is expected that these blocks will act like separate regular buildings during an earthquake. These buildings usually have regular elevation (window openings are aligned along the building height).

Load Path

Load path denotes a manner in which the load is transferred through the building, from the roof down to the foundations. The same building may have different load paths for gravity loads and lateral seismic loads. The design engineer must have a sound understanding of the load path, because deficiencies in the load path may lead to catastrophic consequences (such as collapse). For example, a masonry wall acts as a shear wall and must be connected to the floors and roofs, and also to the foundations. The transfer of seismic forces for each shear wall in the building needs to be continuous from the roof down to the foundations.

Detailing of Structural Elements

In many cases, specific detailing of structural elements is needed to achieve desirable ductile seismic response of a structure. Detailing is very important for RC structural elements such as beams and columns. Detailing requirements are usually prescribed by design codes. For example, specific amount and distribution of longitudinal and transverse

[1] https://taxonomy.openquake.org/terms/structural-irregularity

reinforcement in RC columns are necessary for satisfactory seismic performance. These code-prescribed detailing requirements have evolved over time due to improved understanding of seismic response of structural elements. As a result, it may be required to retrofit structural elements in older buildings because detailing practice followed at the time of original construction does not meet the requirements of current codes.

Horizontal diaphragms

Horizontal diaphragms are floor or roof structures which act as horizontal beams when transferring horizontal seismic forces to vertical elements of LLRS (e.g. walls and frames). Horizontal diaphragms can be made of different materials. Examples of horizontal diaphragms include cast-in-place RC slabs, timber plank and beam floor system, corrugated steel roofing supported by steel trusses, etc. Horizontal diaphragms may have deficient shear or bending strength. It is also possible that individual elements of the diaphragm (e.g. hollow RC precast slabs) are not well connected, hence these connections may be vulnerable to seismic effects. It is also possible that horizontal diaphragms are excessively flexible (e.g. timber diaphragms), while RC slabs are usually considered to be rigid in their plane (this is referred to as rigid diaphragms). Load transfer from horizontal diaphragms to vertical elements of LLRS is different for buildings with flexible and rigid diaphragms, hence it is important for the design engineer to be able to determine whether a diaphragm is rigid or flexible.

Foundations

Foundation deficiencies may occur within the foundation itself, or due to inadequate transfer mechanism between the foundation and soil. Foundation deficiencies include inadequate bearing or shear strength of foundation. Load transfer deficiencies include excessive soil settlement or bearing failure, excessive rotation, or loss of bearing capacity due to liquefaction.

Pounding effect due to adjacent buildings

When a seismic gap between the adjacent buildings is insufficient to accommodate the combined lateral sway (deformations) of these buildings, pounding (collision) between the buildings could take place during an earthquake. Pounding effects are particularly dangerous when floors in adjacent buildings are not aligned at the same elevation, or when the adjacent buildings are of different height.

Deterioration of structural elements

Damaged or deteriorated structural elements can increase seismic vulnerability of an existing building. The condition assessment of an existing building must contain information related to the integrity of materials of the main structural elements. Examples of deterioration include cracks in masonry or RC walls, deteriorated mortar joints, or corroded steel reinforcement.

3.4 An Overview of Building Typologies for Schools in the Kyrgyz Republic

A systematic effort to develop a classification of the building stock for school buildings in the KR has been made by Arup (2016; 2017). More than 5,400 school buildings were surveyed and classified into 13 building typologies (Arup, 2016). Based on the survey, masonry buildings (types 4, 5, and 12) account for 58% (3,136 buildings) of the overall school building stock in the country. RC buildings (types 1, 2, and 3) account for 21% (1,125 buildings) of the overall school building stock. The remaining 21% of the school building stock are either timber buildings or adobe buildings. Figure 3-4 shows a spatial distribution of school buildings in the KR (Arup, 2016). A comprehensive classification of buildings in the Central Asia performed as a part of the EMCA project has identified general building typologies (Wieland et al., 2015). Some of these typologies are the same as typologies for schools and

will be referred to as “EMCA typologies” in this Manual. СНиП 22-01-98 KP also provides a classification of the building typologies and prescribes the corresponding seismic evaluation approaches. A classification of building typologies for schools in the KR is summarized in Table 3-1.

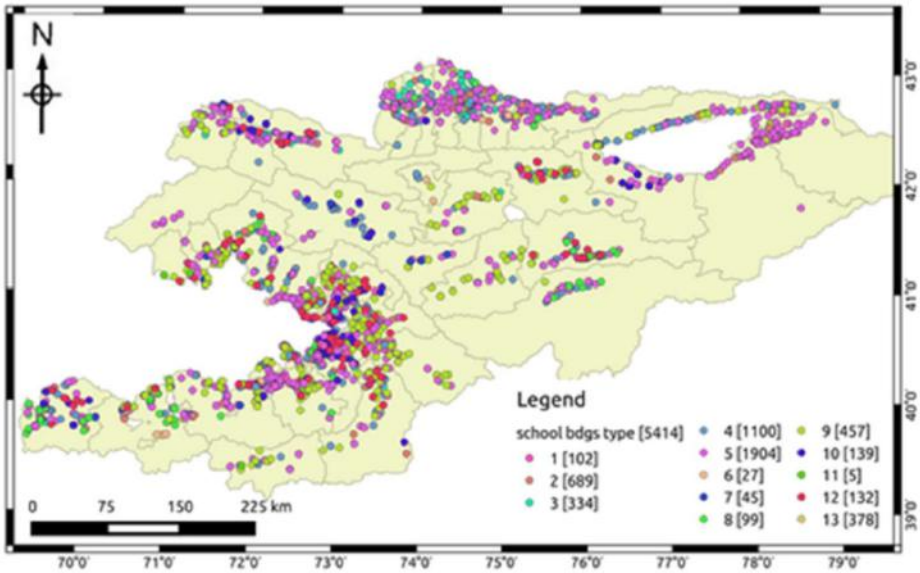

Figure 3-4. Spatial distribution of school building typologies in the Kyrgyz Republic (Arup, 2016).

Table 3-1. School Building Typologies in the Kyrgyz Republic

Material	Type ID (EMCA typology in the brackets)	Description	СниП 22-01-98 KP Classification	Estimated fraction of the overall school building stock in the KR[1]
Masonry	Type 1 (EMCA 11)	Unreinforced masonry with wooden floors (no seismic design)	Subtype 1.4	58 %
	Type 2 (EMCA 12)	Unreinforced masonry with precast concrete floors (no seismic design)	Subtype 1.5, Subtype 1.6	
	Type 3 (EMCA 13)	Confined masonry – masonry walls with horizontal seismic belts and vertical confining elements and precast concrete floors	Subtype 1.1, Subtype 1.2	
Reinforced Concrete (RC)	Type 4 (EMCA 23)	Monolithic RC moment frame with brick infill walls	Subtype 2.3	21%
	Type 5 (EMCA 34)	Precast concrete frame with walls in one direction (Seria 111, IIS-04)	Subtype 2.5	
Timber	Type 6 (EMCA 51)	Buildings with load-bearing braced timber frame	Subtype 9.7	21%
	Type 7 (EMCA 52)	Buildings with wooden frame and mud infills	Subtype 9.6	
Other	Type 8 (EMCA 41)	Non-engineered adobe buildings	Subtype 9.5	

[1] Based on Arup, 2016

3.5 Masonry School Building Typologies

3.5.1 Unreinforced masonry with wooden floors (EMCA 11)

3.5.1.1 Description

These are low-rise buildings, usually one- or two-story high, and are similar to housing typologies described by Uranova and Begaliev (2002). Key structural components of a typical building are illustrated in Figure 3-5. A photo of a typical single-story school building is shown in Figure 3-6. The walls are of unreinforced brick masonry, and mud- or cement-based mortar were used for construction. Either solid clay bricks or multi-perforated bricks were used for wall construction. Exterior walls are about 510 mm thick, while interior walls are about 380 mm thick. There are no RC confining elements in these buildings. These buildings have wooden floors which act as flexible diaphragms. Typical wooden floors are shown in Figure 3-7. Details of floor-to-wall connection are shown in Figure 3-8. It can be seen from the figure that wooden floor beams are supported by the walls without any anchorage. Lintel beams above windows and doors are made of timber planks or steel bars embedded in mortar. A typical roof structure consists of pitched timber rafters and purlins with light-weight roofing consisting of asbestos sheeting. The foundations are continuous RC footings beneath the walls.

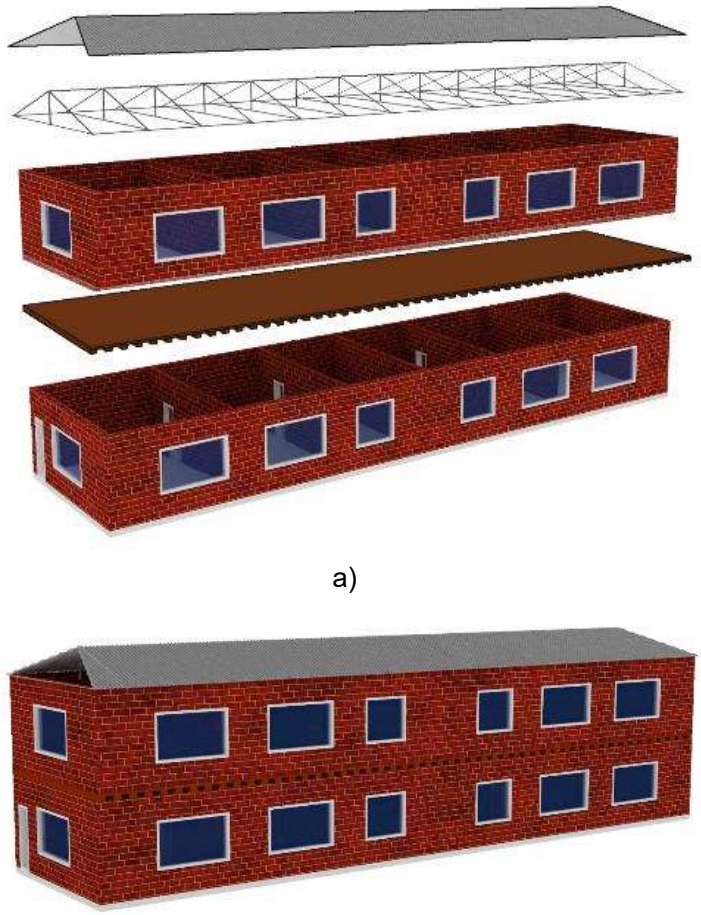

a)

b)

Figure 3-5. Unreinforced masonry walls with wooden floors (EMCA 11 typology): a) key structural elements, and b) an isometric view of the building.

Figure 3-6. A typical school building (EMCA 11) (Jakipova school, Balykchy, built in 1953) (Photo: S. Brzev).

Figure 3-7. Typical wooden floor structures (Photos: S. Brzev).

3.5.1.2 Seismic deficiencies

Seismic deficiencies of unreinforced masonry buildings are well documented in technical literature. The key deficiencies are summarized below:

- Poor shear strength of masonry walls: the mortar used in these older buildings is often made of lime and sand, with little or no cement, and has low compressive and shear strength. Masonry units (bricks and blocks) are often characterized by low compressive strength. As a result, the walls in these buildings have low lateral load-resisting capacity and often experience significant damage when subjected to seismic loads.
- Walls with large openings: most exterior walls have significantly large openings (windows); as a result, the lateral load-resisting capacity of building (which relies on the sufficient number and capacity of masonry walls) may be inadequate.
- Insufficient wall-to-floor and wall-to-roof anchorage: the walls are not positively anchored to the floors, they tend to fall out during earthquakes (this is most often the case with exterior walls). The collapse of bearing walls can lead to major building collapses.
- Flexible diaphragms: timber floor diaphragms are very flexible and could cause large out-of-plane deflections in the walls perpendicular to the direction of earthquake shaking. These large displacements could lead to out-of-plane collapse of masonry walls.

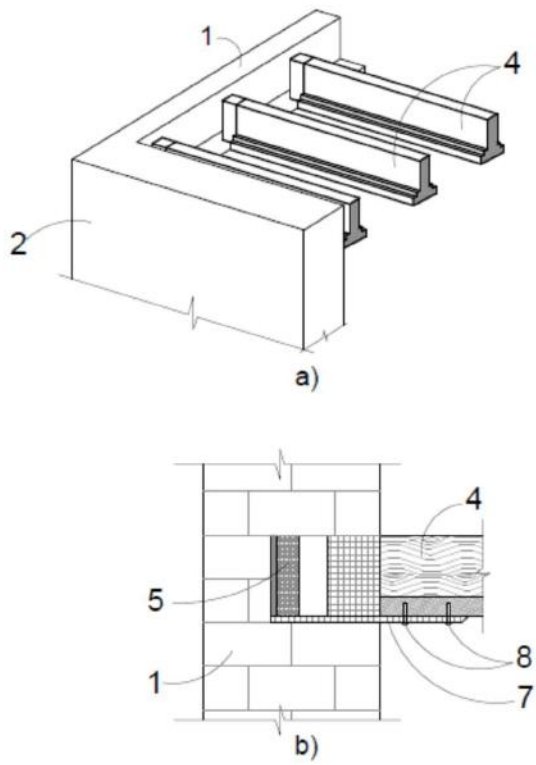

Figure 3-8. Wall-to-floor connection (1 - external load-bearing wall; 2 - external non-load-bearing wall; 3 - internal non-load-bearing wall; 4 - wooden beam; 5 - thermowell; 6 - waterproofing; 7 - anchor of strip steel; 8 – nails).

3.5.1.3 Seismic response

In general, masonry buildings are robust and durable, and are usually able to sustain the effects of gravity loads (dead and live load), and environmental loads such as snow and wind loads. However, unreinforced masonry buildings are among the most vulnerable structural systems when exposed to earthquake ground shaking. These buildings have demonstrated poor seismic performance and caused fatalities in many past earthquakes. Figure 3-9 shows damage of an unreinforced masonry school building in Osh, KR due to the 2008 Karasuu earthquake (magnitude 5.6). The seismic performance of these buildings depends on the integrity of the overall structure which is critical for maintaining a box-like behavior. This behavior can be achieved when the walls are well-connected at intersections, there are rigid diaphragms (e.g. RC floors) and adequate wall-to-floor and wall-to-roof connections. Unfortunately, structural integrity is often a challenge for unreinforced masonry structures.

Another deficiency is associated with the in-plane shear strength of masonry walls. When subjected to in-plane lateral loading which induces high tensile stresses, cracking occurs in the walls and may ultimately lead to shear failure. Cracking pattern in unreinforced masonry buildings is shown in Figure 3-10. Shear capacity of the walls depends on the mechanical properties of masonry materials and the wall geometry (height, length, and thickness). Finally, some walls in these buildings may collapse due to out-of-plane seismic effects – when earthquake shaking occurs perpendicular to the wall surface. This failure mechanism usually occurs in walls with inadequate wall-to-floor and wall-to-roof connections. Typical out-of-plane failure mechanisms are shown in Figure 3-11.

Figure 3-9. Damage to School Lenin, an unreinforced masonry building in Osh, KR due to the 2008 Karasuu earthquake (magnitude 5.6) (Photos: U. Begaliev).

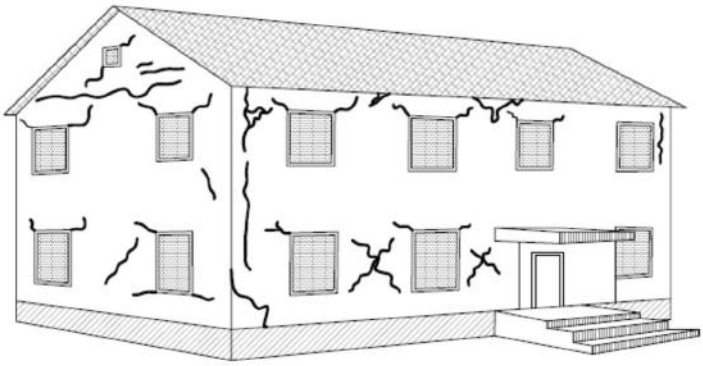

Figure 3-10. Damage pattern characteristic for unreinforced masonry buildings (adapted from Grunthal, 1998).

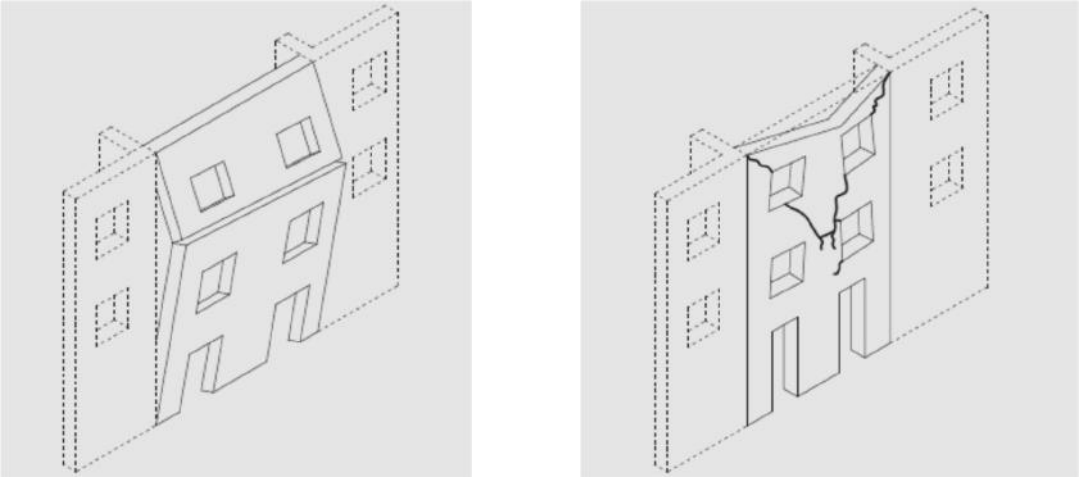

Figure 3-11. Out-of-plane collapse mechanisms for unreinforced masonry walls (D'Ayalla and Speranza, 2003).

3.5.2 Confined masonry buildings with precast RC floors (EMCA 13)

3.5.2.1 Description

These are low-rise buildings, usually two- or three-story high, and are similar to housing typologies described by Begaliev and Uranova (2002). Key structural components of a typical building are illustrated in Figure 3-12. Photos of typical school buildings are shown in Figure 3-13 and 3-14. The walls were constructed using brick masonry in cement:sand or cement:lime:sand mortar. Clay masonry units (either solid bricks or multi-perforated blocks) were used for the wall construction. Typical brick dimensions are 250 mm by 120 mm by 88 mm (or 65 mm). The exterior walls are about 510 mm thick, while interior walls are about 380 mm thick. Horizontal and vertical RC confining elements are provided at critical locations in the building. These provisions were first introduced in 1957 (CH-8-57). These buildings have some features of confined masonry construction. Vertical RC confining elements were placed at wall intersections and at the openings. Horizontal RC bond beams (seismic belts) were constructed at the building perimeter at all floor levels to provide the confinement and diaphragm action for seismic load effects. Wall and floor construction details, including RC confining elements, are shown in Figure 3-15. It is also required to provide horizontal reinforcement (wire mesh) in mortar bed joints at each 7th layer. Exterior walls in these school buildings are usually perforated with large door and window openings.

The floor system consists of precast RC hollow-core slabs with typical plank dimensions of 5.86 m length by 1.2 m width. The planks are placed parallel to one another and the gaps between them are filled by cast-in-place concrete. There is a cast-in-place concrete topping (выравнивающая бетонная стяжка), approximately 2 cm thick. Floor details are shown in Figure 3-16. A typical roof structure consists of pitched timber rafters and purlins with light-weight roofing (usually asbestos sheeting). The foundations are continuous RC footings beneath the walls. These schools were constructed before1990 and were designed according to standard designs that were used throughout the former Soviet Union.

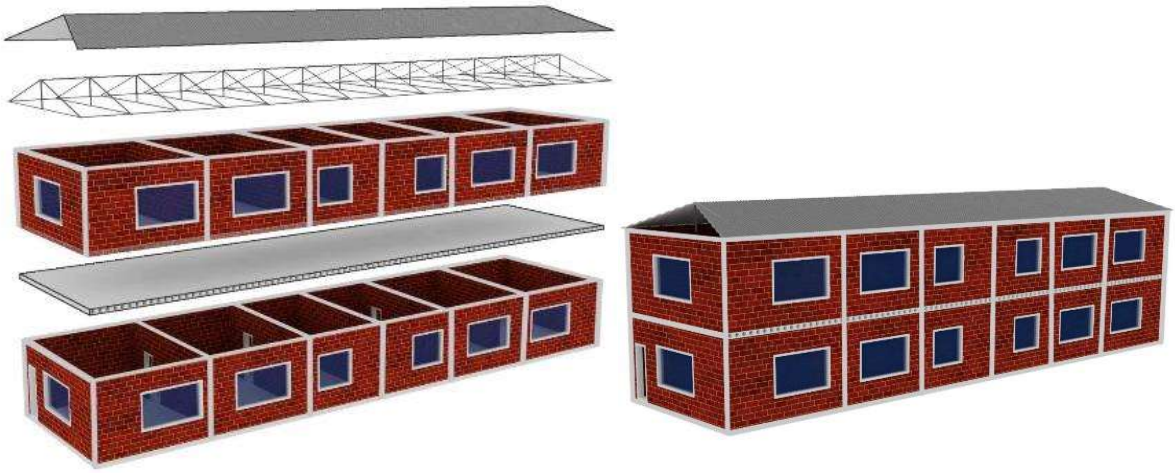

a) b)

Figure 3-12. Confined masonry building with precast RC floors (EMCA 13): a) key elements, and b) an isometric view of the building.

Figure 3-13. A typical school building (Bokombaeva School, Toktogul, built in 1972) (Photos: S. Brzev).

Figure 3-14. A typical school building (Turdumambetov school, Toktogul, built in 1973) (Photos: S. Brzev).

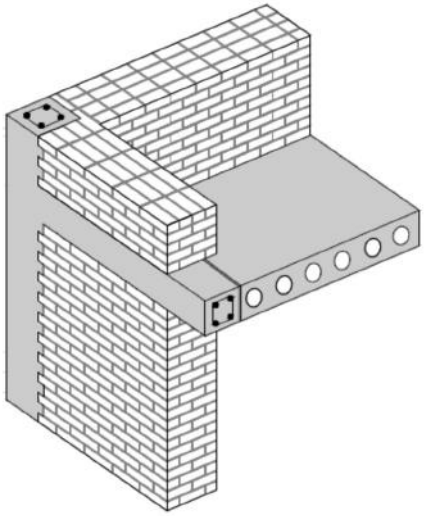

Figure 3-15. Wall and floor construction details showing RC confining elements.

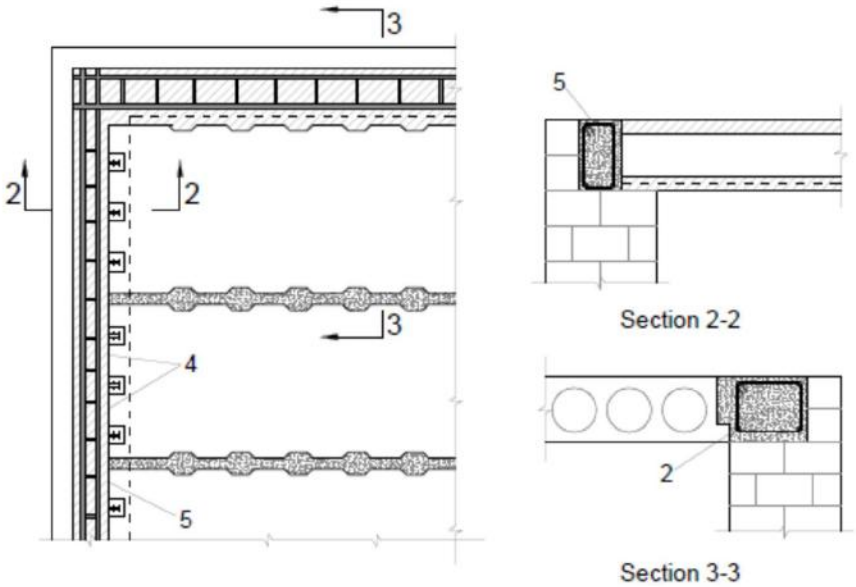

Figure 3-16. RC horizontal confining elements and floor slab details: 2 – reinforced concrete belt; 3 – 8 mm diameter anchor at 50-60 cm spacing; 4 – frame of binding (stud); 5 – reinforced concrete binding (stud).

These buildings usually have a complex plan shape, but they are separated into several regular (rectangular) building blocks by means of seismic gaps. A typical floor plan is shown in Figure 3-17.

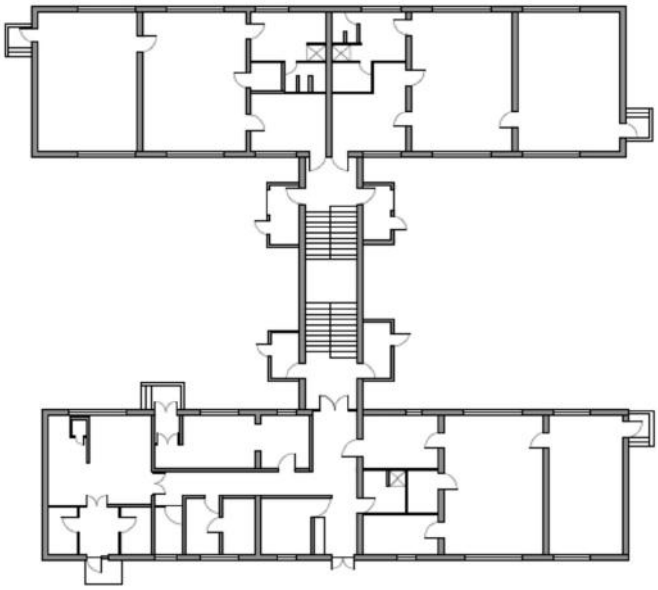

Figure 3-17. Typical plan of a masonry school building (kindergarten Ak Tilek, Balykchy).

3.5.2.2 Seismic deficiencies

This building typology consists of masonry walls reinforced with RC components, namely, horizontal seismic belts at each floor level and vertical confining elements at critical locations

within the building. These buildings are less vulnerable to seismic effects than unreinforced masonry buildings. However, a few seismic deficiencies are summarized below:

- Inadequate shear resistance of masonry walls: although the shear resistance of walls in these buildings is influenced by the presence of RC components, mechanical properties of masonry (brick and mortar) significantly influence the shear resistance of individual walls. Shear damage in confined masonry walls may be expected, but the collapse is often prevented due to the presence of RC confining elements.
- Walls with large openings: most exterior walls have significantly large openings (windows); as a result, the lateral load-resisting capacity of building (which is relied on the sufficient number and capacity of masonry walls) may be inadequate.

Hollow core RC floor slabs may be also seismically deficient due to the limited shear capacity and lack of integrity. Seismic deficiencies of hollow core floor slabs are discussed in Section 3.6.2.2 (related to RC school buildings).

3.5.2.3 Seismic response

Confined masonry buildings with horizontal and vertical RC components have been exposed to many damaging earthquakes in Latin America. In general, these buildings performed significantly better than unreinforced masonry buildings. In the February 2010, Maule, Chile earthquake (magnitude 8.8), some confined masonry buildings experienced damage, but very few buildings collapsed (Astroza et al., 2012). Damage of confined masonry buildings due to the 2010 Chile earthquake is illustrated in Figure 3-18. Confined masonry is a common housing construction practice in Chile, both for individual housing and multi-family housing (apartment buildings). It should be noted that confined masonry buildings in the KR have significantly thicker walls (510 mm for exterior walls) compared to similar buildings in Chile and other Latin American countries (150 mm). Damage of a confined masonry school building due to the 2008 Osh, KR earthquake is shown in Figure 3-19.

Confined masonry walls can experience cracking and possibly failure when earthquake forces exceed the in-plane shear capacity of the walls. Shear failure mechanism is brittle and generally undesirable. Damage in multi-story buildings is concentrated at the ground floor level where seismic forces are highest, hence internal shear stresses in the walls are also largest.

In some cases, confined masonry walls may experience an out-of-plane failure, particularly at upper floor levels where earthquake vibrations (and the corresponding spectral accelerations) are most significant. This failure mechanism is not very common in confined masonry buildings due to the interaction between the walls and adjacent confining elements.

Wylie and Lew (1989) reported partial or total collapse of stone masonry buildings with hollow core slabs in the 1988 Spitak, Armenia earthquake. These buildings did not have horizontal RC seismic belts at the floor perimeter (unlike the buildings described here), and there were no metal anchors connecting the planks to the walls. It was observed that the connection between individual hollow core planks was lost during the earthquake, and that the concrete topping was absent. About 80 stone masonry buildings collapsed in Spitak during the earthquake. In most cases, exterior walls collapsed out-of-plane; this was followed by the floor or roof collapse.

Figure 3-18. Damage of confined masonry walls due to the 2010 Chile earthquake (Photos: M. Astroza).

Figure 3-19. Damage of a confined masonry school building due to the 2008 Osh, KR earthquake (Photo: U. Begaliev).

3.6 RC School Building Typologies

3.6.1 Monolithic RC moment frame with brick infill walls (EMCA 23)

3.6.1.1 Description

These school buildings were mostly constructed in the 1990s or later. The main gravity and lateral load-resisting system is RC frame which consists of columns and beams. An isometric view of this building typology is shown in *Figure 3-20*. Photos illustrating a typical school building are shown in Figure 3-21. RC floor slabs are beam and slab systems where beams span between the columns and are cast monolithically with the slabs. The beam-to-column joints are rigid and enable transfer of bending moments between these elements. A detail of frame and wall construction is shown in Figure 3-22. Exterior walls, and possibly

some interior walls, are of unreinforced masonry construction and are referred to as *masonry infills*.

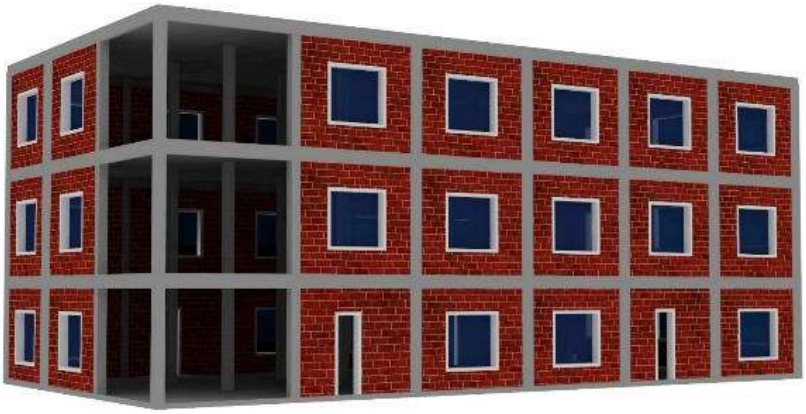

Figure 3-20. Monolithic RC frame building with masonry infills (EMCA 23).

a)

b)

c)

Figure 3-21. Typical RC frame school building (Ene-Say School #21, Bishkek, constructed in 2006): a) an exterior view; b) an interior view (lobby); and c) a typical corridor (Photos: S. Brzev).

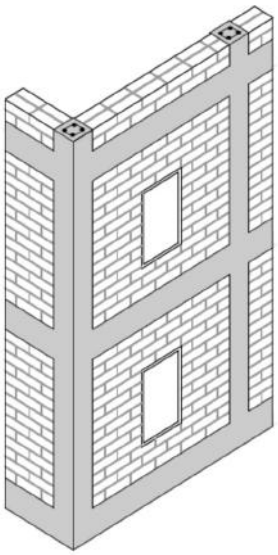

Figure 3-22. Frame and floor construction details.

Floor plan for a typical school building is presented in Figure 3-23.

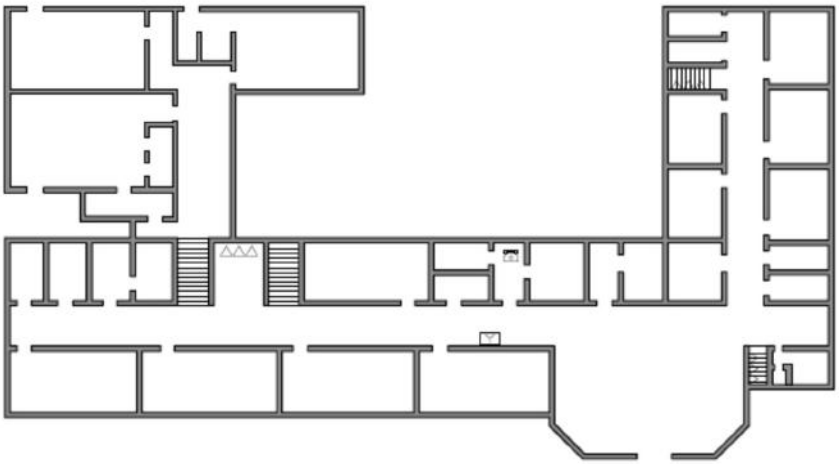

Figure 3-23. Typical floor plan for a RC frame building with masonry infills (Ene-Say School #21, Bishkek).

3.6.1.2 Seismic deficiencies

The relatively flexible frame in these buildings can lead to substantial non-structural damage. However, the following key seismic deficiencies are related to seismic design and detailing of columns, beams, and beam-column joints:

- Columns
    a) Large tie spacing could lead to a lack of concrete confinement and/or shear failure.
    b) Insufficient shear strength could lead to a brittle shear failure.
    c) Placement of vertical reinforcement splices at the same location (e.g. floor level) could lead to a column failure.
    d) Insufficient shear tie anchorage could prevent the column from developing its full shear capacity.

- Beams
    a) Lack of continuous beam reinforcement through the column could result in hinge formation due to load reversals caused by an earthquake.
    b) Beams with large cross-sectional dimensions and high longitudinal reinforcement ratio may cause undesirable “strong beam-weak column” failure mechanism in RC frames.
- Beam-column joints

  Inadequate reinforcing of beam-column joints, or beam reinforcement splices placed at column faces can lead to failure.

3.6.1.3 Seismic response

Monolithically cast RC frames with masonry infills are common in many seismically prone areas of the world. Reports from past earthquakes, including the 2003 Bingol, Turkey earthquake (magnitude 6.4); the 2001 Bhuj, India earthquake (magnitude 7.7); and the 2015 Gorkha, Nepal earthquake (magnitude 7.8), revealed poor performance of this building typology. Many buildings of this type experienced extensive damage and/or total collapse. Ideally, RC frame structures should perform in a ductile manner characterized by significant lateral deformations prior to the failure. Ductile behavior can be achieved, provided that RC columns and beams were designed and detailed in a ductile manner. It is desirable that the damage occurs first in beams, and that the columns remain stronger than beams and show elastic behavior. This is known as “strong column-weak beam” mechanism and is illustrated in Figure 3-24b). The locations where damage is expected to take place are called “plastic hinges”. This mechanism can be achieved in RC frames designed according to the principles of Capacity Design Method (Paulay and Priestley, 1992), which has been adopted by most seismic codes in the world. In some cases, an alternative mechanism (“weak column-strong beam”) develops, in which damage occurs in the columns and may lead to instability and collapse of the entire building, as observed in the 2015 Nepal earthquake (Brzev et al., 2017). This failure mechanism is illustrated in Figure 3-24a). Global design and construction challenges associated with the construction of RC buildings designed to perform in this manner are well documented (Murty at al., 2006). Masonry infill walls in these buildings are often considered as non-structural elements, and they are not taken into account in the seismic analysis of RC frame buildings. However, these infills may significantly influence failure mechanism of RC frames. When infills are strong relative to the frame (due to higher strength of masonry units or larger wall thickness), this may lead to an undesirable shear failure mechanism, which is characterized by the shear failure of masonry infills and adjacent RC columns (Brzev et al. 2017a), see Figure 3-24c).

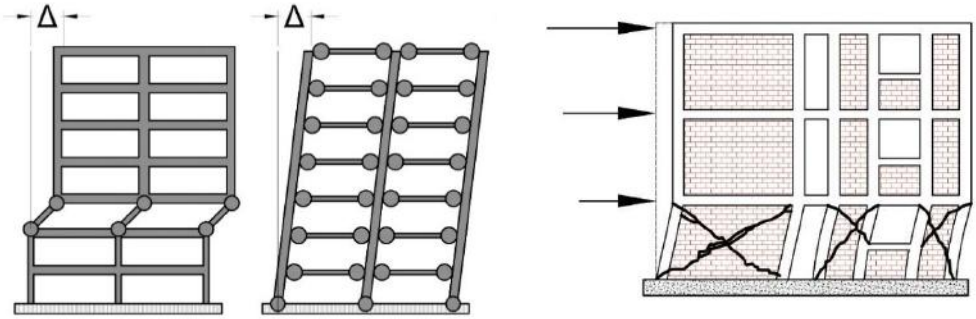

a) b) c)

Figure 3-24. Seismic failure mechanisms for RC frames: a) “weak column-strong beam” mechanism; b) “strong column-weak beam” mechanism (Murty et al., 2006), and c) shear failure mechanism (Meli et al., 2011).

School buildings of this typology performed poorly in many earthquakes around the globe. Several buildings of this type collapsed both in urban and rural areas of Nepal due to the 2015 Gorkha earthquake (magnitude 7.8) (Pandey, 2017), see Figure 3-25. In most cases, collapse occurred at the ground floor level due to “weak column-strong beam” mechanism, as shown in Figure 3-26. Refer to Paci-Green, Pandey, and Friedman (2015) for a detailed information regarding the performance of school buildings in the 2015 Nepal earthquake. Poor performance of this building typology was also observed in Turkish school buildings after the 2003 Bingol earthquake (magnitude 6.4) (Gulkan et al., 2003). Figure 3-27 shows a collapse of the school and an adjacent dormitory with 200 children who were asleep during the earthquake.

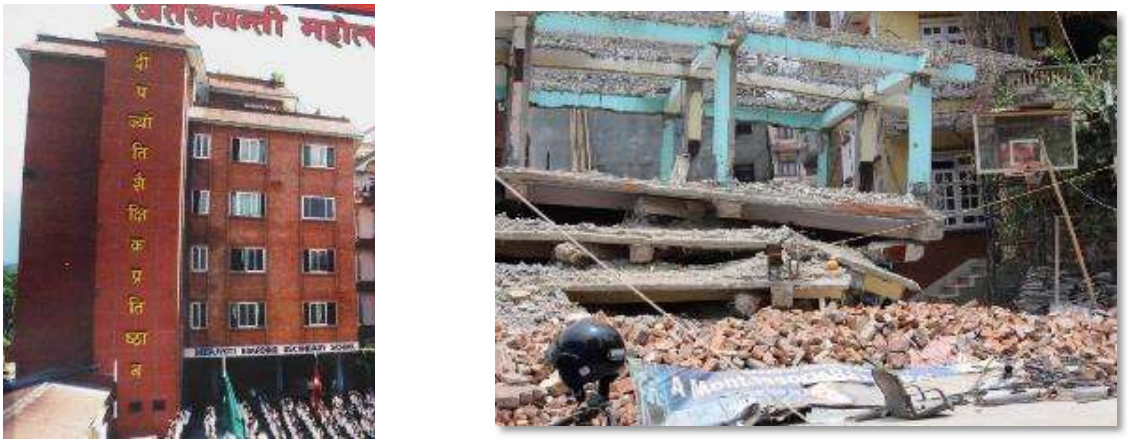

a) b)

Figure 3-25. A complete collapse of a RC school building in Kathmandu, Nepal due to 2015 Gorkha earthquake: a) school building before the earthquake, and b) after the earthquake (Photos: S. Brzev).

a) b)

Figure 3-26. Ground floor collapse in a rural school in Sindupalchok District, Nepal due to the 2015 earthquake: a) an overall view of the building showing the collapsed ground floor, and b) a detail of the collapsed ground floor showing fracture of column reinforcement (Photos: S. Brzev).

a) b)

Figure 3-27. Collapse of RC school buildings due to the 2003 Bingol, Turkey earthquake: a) school building after the earthquake, and b) ground floor collapse (Photos: P. Gulkan).

3.6.2 Precast RC frame with exterior precast RC panels (EMCA 34)

3.6.2.1 Description

This construction is known as Seria IIS-04 and it was one of the standard precast (prefabricated) construction systems in the former Soviet Union. It was developed in 1973, and it was described in detail by Khakhimov and Nurtaev (2002). An isometric view of this building typology is shown in Figure 3-28. Photos illustrating a typical school building are shown in Figure 3-29. This construction practice was used both for the construction of residential buildings (9- to 12-storey high) and also public buildings such as schools (1- to 4-storey high). All structural elements, e.g. foundations, columns, beams, slabs, staircases, wall panels, etc., were manufactured in specialized plants. The building assemblage started at the foundation level with precast RC footings. Subsequently, RC columns are erected in vertical position and joined by welding. Note that columns have corbels on two sides to receive RC beams and are connected above the floor level. Subsequently, beams are lifted in the final position. Beams and columns are joined by welding, and finally cast-in-place concrete is placed to fill the voids. Conceptual column-beam and floor-column connections are shown in Figure 3-30. Photos shown in Figure 3-31 illustrate these connections. A rigid beam-column connection is usually considered for seismic design of these buildings by design engineers in the KR.

Floor slabs consist of 220 mm thick hollow core precast RC planks (approximately 5.8 m long and 1.2 m wide) which are spanning in one direction. These planks are supported by the beams (which are in turn supported by the columns). The planks are constructed with special grooves and have steel dowels projected on all four sides. Monolithic concrete is placed to achieve the connection between adjacent planks. Connections between the hollow core planks and the RC beams, and the connections between the planks in longitudinal directions are achieved through welded plates (welding was performed at the construction site); these connections are documented on the drawings for Seria ИИС-04-10 (Госстрое СССР, 1964). Design engineers in the KR usually consider these floors as rigid diaphragms for seismic design purposes.

Exterior cladding in these buildings consists of precast concrete panels which are connected to the columns by welding. Details of the panel-to-column connections are shown in Figure 3-32. A façade view of the school with exterior precast panels is shown in Figure 3-33.

Figure 3-28. A precast RC frame building with exterior precast RC panels (EMCA 34).

Interior walls in longitudinal direction are unreinforced brick masonry infills (usually 380 mm thick). Seria IIS-04 had a provision for isolating masonry infill walls from the frames. Provision of a gap in masonry partition walls in RC buildings was first introduced in 1981 (Cl. 3.24 СНиП II-7-81). Before 1981 a gap was provided in many buildings, but it was not a code requirement. It was a common practice to provide a 20 mm gap on 3 sides of the wall (two vertical sides adjacent to RC columns and a horizontal side adjacent to the beam). The gap was filled with cement-based mortar. Clauses 2.13 and 3.12 of the SNiP II-7-81 (and 3.54 SNiP II-A.12-69*) contained provisions for out-of-plane restraints, which prevent the walls to topple due to the out-of-plane earthquake effects. As a result of these provisions, design engineers in the KR consider that there is no interaction between RC frames and infills in these buildings.

a)

b)

c)

Figure 3-29.Typical school buildings (School 1, Alamedin, and School 46, Sechenov Street, Bishkek): a) an exterior view - entrance; b) an exterior view showing precast wall panels, and c) a typical corridor (Photos: S. Brzev).

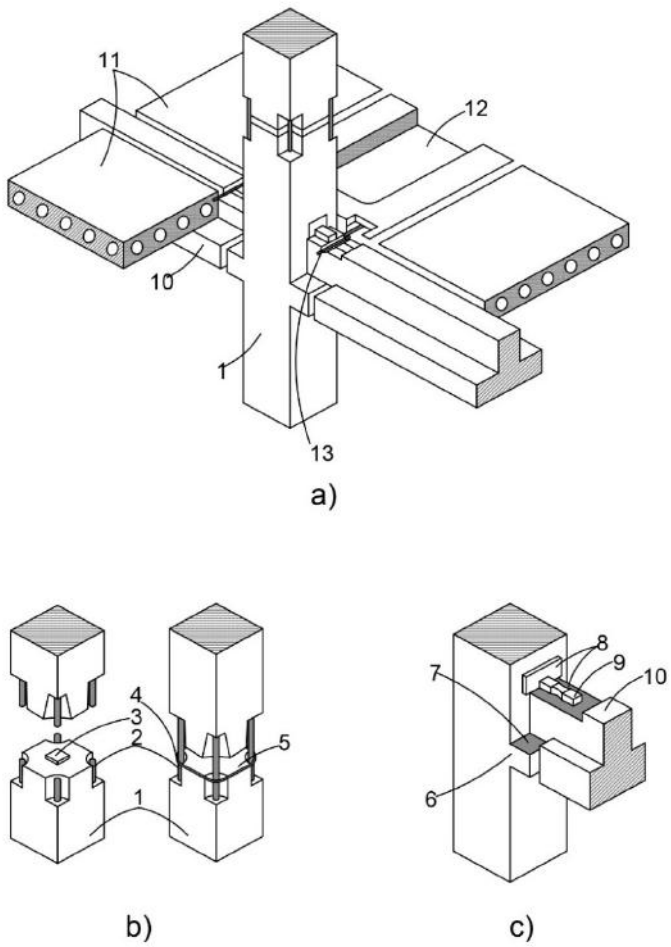

1 – concrete column;

2 – free length of reinforcement;

3 – concrete corbel;

4 – steel link;

5 – grouted joint;

6 – concealed column cantilever;

7, 8 – built-in items;

9 – steel splice piece;

10 – concrete beam;

11 – floor slab;

12 – column (braced) slab;

13 – steel tie

Figure 3-30*. Precast RC frame: column-beam and floor-column connections: a) an overall view of the joint; b) column connection, and c) beam-column connection (Source: ArBuild).*

a) b)

Figure 3-31. Frame connections in an existing school building: a) column-slab connection, and b) column-beam connection (Photos: S. Brzev).

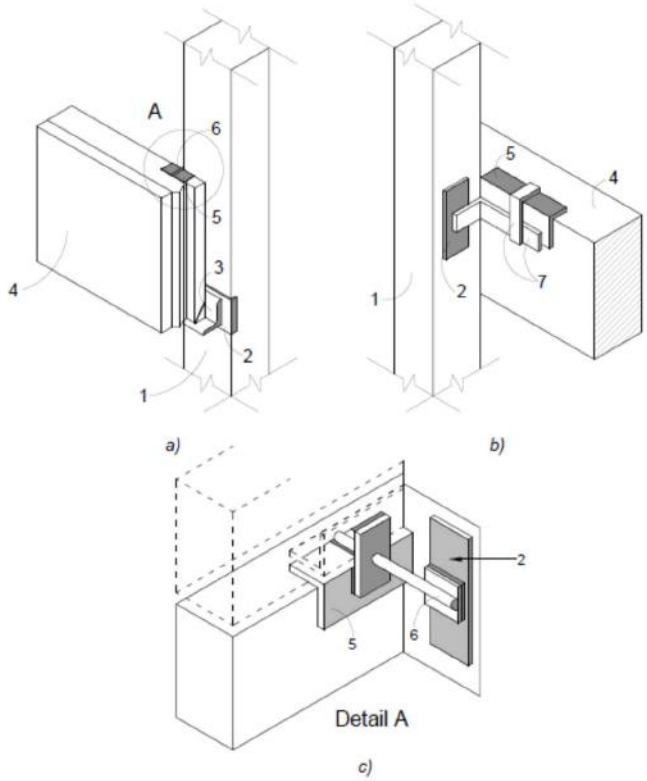

1 – column; 2 – steel plate anchorage to column; 3 – support table; 4 – wall panel; 5 – steel plate anchorage to wall panel; 6 – steel core; 7 – grappled from the steel corners

a) *b)*

Figure 3-32. Exterior wall panels - connections: a) conceptual details (Source: Remstroyinfo), and b) panel in an existing school (Photo: S. Brzev).

Figure 3-33. Exterior precast wall panels: façade view (schools in Bishkek) (Photos: S. Brzev).

These buildings usually have a complex plan shape, but they are separated into several regular (rectangular) building blocks by means of seismic gaps. A typical floor plan is shown in Figure 3-34.

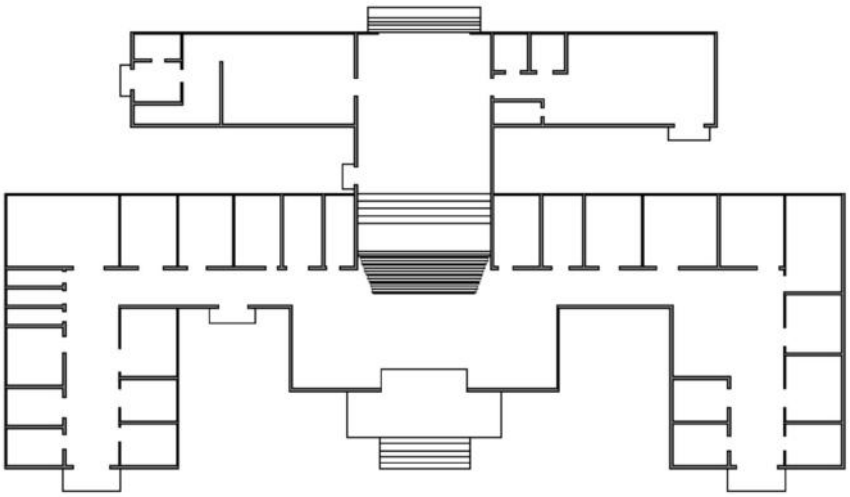

Figure 3-34. Typical floor plan for a precast RC school building (School #32, Bishkek).

3.6.2.2 Seismic deficiencies

The main sources of seismic deficiencies for this building typology are welded beam and column joints and hollow core RC floor slabs. These welded joints have demonstrated extremely brittle behavior in past earthquakes in the former Soviet Union, as discussed in the following section. Beam-column joints are most vulnerable because they are located in the area of extremely high earthquake-induced internal stresses. As a result of the welding, steel reinforcement in the joint area might become brittle. Also, concrete poured in these joints is often poorly vibrated. Column joints may also be deficient due to welding, as observed in past earthquakes (see Section 3.6.2.3).

Hollow core precast RC floor slabs may also be vulnerable to earthquake effects and may pose a threat to seismic safety of school buildings, particularly given potential life-threatening consequences of floor collapses in the inhabited buildings. Several research studies have been conducted in New Zealand (Matthews, Bull, and Mander, 2003, 2003a; Matthews, 2004), and guidelines for seismic evaluation of these structural elements have been developed (SESOC, 2009; Fenwick, Bull, and Gardiner, 2010). Due to the reported poor performance of these slabs in the New Zealand earthquakes (2010-2016), the Government has issued an alert for building owners and the engineering community (SESOC, 2017). The research performed in New Zealand is relevant for the studies on seismic safety of precast floor slabs in the KR's school buildings. The following issues may pose risk to seismic safety and integrity of hollow core floor slabs in school buildings in the KR:

1. Floors may lose support provided by the beams; this could lead to a partial or complete floor collapse;
2. The joints between precast floor slabs (concrete placed in-situ) are sometimes not properly filled with grout and may lose their strength in an earthquake, resulting in the cracking along the plank joints, and
3. Concrete topping (usually 20 mm thick in the KR construction practice) may be absent, and it is not reinforced with steel mesh. In cases where steel mesh is present, it needs to be ductile (fracture of brittle steel mesh in concrete topping was observed in the New Zealand earthquakes).

Note that the first issue is related to the seismic response of RC frame structures, while the second and third issues are the consequences of the local construction practice.

There are three main potential causes for loss of support in hollow core RC floor systems in the precast RC frame structures typical for schools in the KR:

a) Spalling of concrete within the hollow core plank support zone;
b) Excessive lateral movement of the hollow core planks due to the swaying of RC frame, or
c) Premature collapse of the supporting RC beam(s) in an earthquake.

Spalling of concrete may take place at the back face of hollow core plank supported by RC beam due to rotation of the plank and formation of crack at the plank-to-beam interface (Fenwick, Bull, and Gardiner, 2010), see *Figure 3-35*. There is also a shear transfer across the crack (force Q) which may cause spalling in the beam (note an inclined support reaction R).

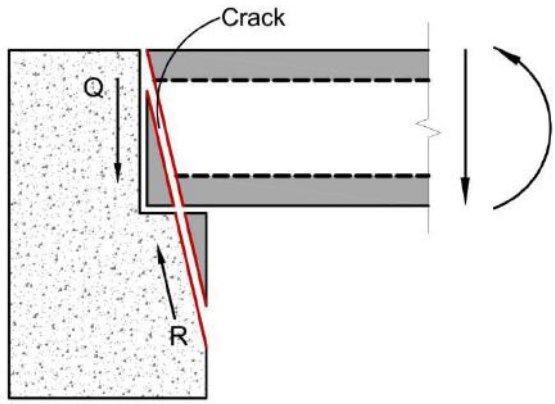

Figure 3-35. Spalling of concrete within the hollow core plank support zone (based on Fenwick, Bull, and Gardiner, 2010).

Excessive lateral movement of hollow core planks could take place due to lateral swaying of the RC frame. Consider a typical precast floor slab system consisting of the supporting columns, RC beams spanning between the columns, and the hollow core RC planks spanning in one direction. There are two types of beams: supporting beams A (which support the hollow core planks) and transverse beams B (parallel to the hollow core planks). When an earthquake acts in the direction parallel to the planks, beams B elongate and there is a potential for damage and loss of support along the beams A, see *Figure 3-36*a). However, since the earthquake motions are generally bi-directional, there is a potential loss of support in both directions (*Figure 3-36*b). This is particularly critical for the exterior panels at the building corners.

In ductile RC frame structures which show nonlinear seismic behavior it is desirable for plastic hinges to develop in the beams ("strong column-weak beam" failure mechanism, see Figure 3-24a). As the beam undergoes large inelastic (plastic) deformations, it grows in length - that phenomenon is referred to as "beam elongation". Refer to Matthews, Bull, and Mander (2001) for a detailed explanation of the beam elongation. The studies have shown that the beam elongation may be on the order of 2 to 5% of the beam depth per plastic hinge. This means that a beam with 2 plastic hinges may elongate by up to 10% of the beam depth, that is, up to 25 mm per beam support for a 500 mm deep beam. This may negatively affect floor slabs with a short support length, because contact length between the hollow core plank and the supporting beams will be decreased due to the beam elongation.

As a result of the elongation, beams A and B may start to rotate out-of-plane and move away from the hollow core planks (note the beam elongation Δ). As a result, hollow core planks may be pulled off their support, as shown in *Figure 3-37*.

In the context of the KR's precast construction practices for RC frames (e.g. Seria IIS-04), it is possible for the RC beams to experience a brittle failure due to the failure of welded beam-column connections. In that case, loss of support in hollow core planks is imminent when supporting beams A collapse. Note that the behavior of transverse beams B is not critical (does not govern the slab collapse).

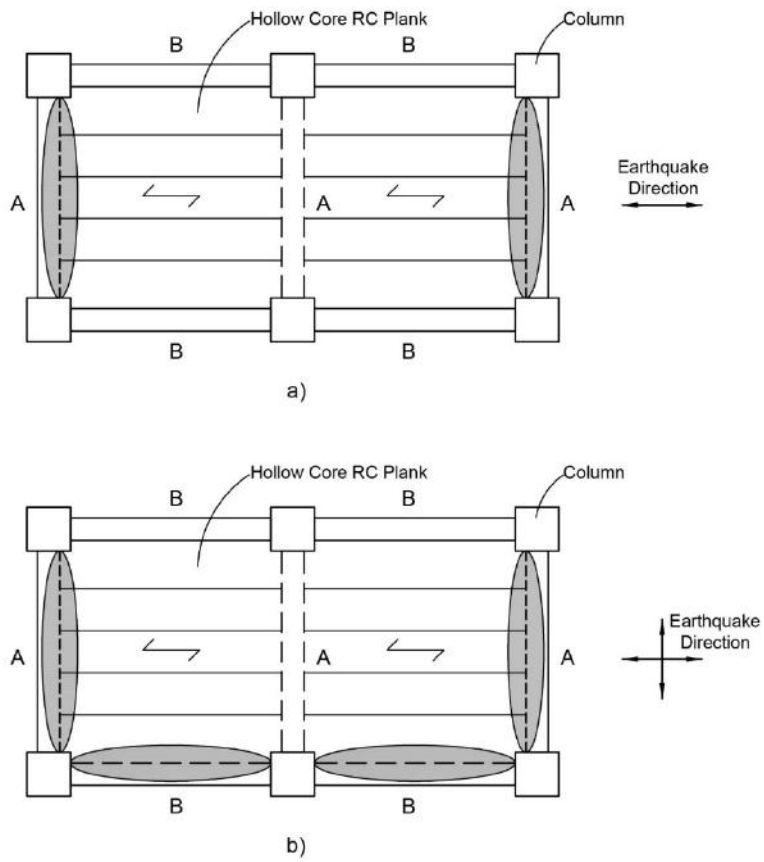

Figure 3-36. Regions of potential damage and loss of support in hollow core precast RC slabs – plan view: a) unidirectional earthquake action, and b) bi-directional earthquake action (based on Matthews, Bull, and Mander, 2001).

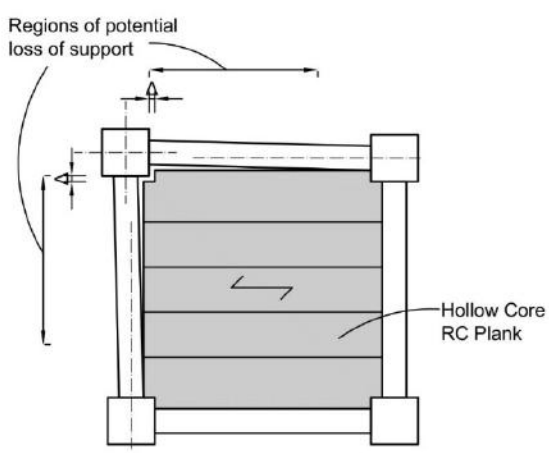

Figure 3-37. Deformation of the floor slab due to the beam elongation – note regions where potential loss of support is possible (based on Matthews, Bull, and Mander, 2001).

In addition to the above issues, earthquake-induced lateral swaying may cause displacement incompatibility between the beams in RC frames and precast floor systems. Hollow core precast planks are normally designed to act as simply supported elements (deforming in single curvature) and try to remain straight between the supports. On the other hand, beams in multi-bay RC frames deform in double curvature, as shown in *Figure 3-38*a). As a result, vertical displacements Y develop between the beams and the adjacent hollow core units within the perimeter region of the floor. Consequently, horizontal splitting cracks may develop in the webs of hollow core planks (*Figure 3-38*b), which ultimately cause separation and collapse of the bottom portion of the hollow core planks. This behavior was confirmed by an experimental study in New Zealand (Matthews, 2004) and has been addressed by provisions of the New Zealand concrete code NZS 3101:2006 (SNZ, 2006).

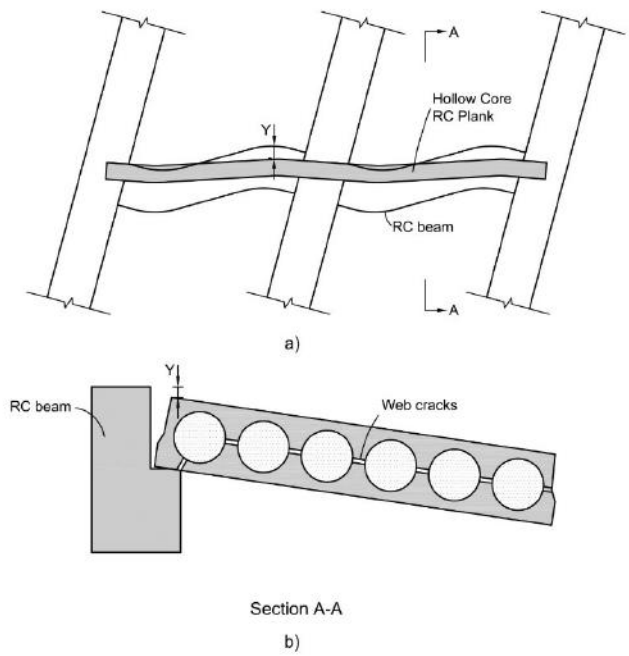

Figure 3-38. Displacement incompatibility between the perimeter beam and hollow core precast floor slabs in RC framed structures: a) elevation view, and b) section showing horizontal splitting cracks in the webs of hollow core planks (based on SESOC, 2009).

Nonstructural elements in these buildings, like precast exterior wall panels with welded connections, may also be prone to earthquake damage and/or collapse. It is expected that these walls will initially cause a stiffness increase of the frames to which they are attached, since they are rather stiff (300 mm thickness), see Figure 3-32. They are likely going to experience a brittle failure of the welded connections at larger seismic force-based demands. The failure may take place either due to in-plane or out-of-plane seismic loading.

Nonloadbearing masonry partition walls are also nonstructural elements. These walls are isolated from the RC frame by a gap, as discussed in Section 3.6.2.1. It appears that past seismic design codes (SNiP II-7-81 and SNiP II-A.12-69*) contained provisions for out-of-plane restraints, but there is a chance for out-of-plane failure of these walls if the restraints become ineffective at higher seismic demands.

3.6.2.3 Seismic response

Since the connections between key structural elements are achieved by welding, it is expected that the structure behaves in elastic manner until the failure of beam-column joints

takes place. Welded connections are rigid and brittle and have a limited ability to dissipate earthquake energy. The only possible sources of ductile behavior in these buildings are plastic hinges in columns and beams (if they exist), however there is no evidence of ductile detailing of these members since many of these buildings were constructed in the 1960s and 1970s. Failure of individual structural elements (beams, columns) may be expected when either their resistance (capacity) is exhausted or the capacity of joints connecting these elements is exhausted. Failure of exterior RC wall panels is also possible when loadbearing capacity of the welded connections has been reached. The collapse of entire building may take place when the columns are no longer able to carry gravity load due to the connection failure, or when there is excessive lateral swaying of the building.

These buildings suffered severe damage in past earthquakes in the former Soviet Union, including the 1988 Spitak, Armenia earthquake (magnitude 7.5, MSK intensity 9-10); 1984 Gazli, Uzbekistan earthquake (magnitude 7.2, MSK intensity 9), and the 1994 Shikotansk, Russia earthquake (magnitude 8.1, MSK intensity more than 10). Examples of earthquake-induced building collapses are shown in Figure 3-39.

Wylie and Lew (1989) reported damage of precast RC frame buildings in the 1988 Spitak, Armenia earthquake. Although most buildings affected by the earthquake were constructed as Seria 111 (which is different from Seria IIS-04 discussed in this section), typical damage patterns were similar. Buildings under construction at the time of earthquake provided an opportunity to show details of welded column and beam-column connections. Eccentricity in welded bar splices was observed in the columns. Failure of the column splices was observed in several buildings. In most cases, bars had buckled, steel ties (transverse reinforcement) failed due to 90 degree hooks, and concrete was crushed. This is illustrated in Figure 3-40. Beam-column connection was achieved by welding the bottom beam reinforcement to angles and column dowels at top. Poor performance of the floor diaphragms consisting of hollow core precast RC planks was also reported; this likely occurred because the planks were not interconnected and they did not have a reinforced concrete toping. It is expected that these floors contributed to the collapse of a five-story RC frame building in Spitak which housed communications equipment. The building had rigid cladding at the exterior and precast RC frames in the interior. The central portion of the building collapsed and the floor slabs caved in (see *Figure 3-41*). It is believed that the floor diaphragms were unable to span the distance between the shear walls and the frames.

Norton et al. (1994) reported the collapse of hollow core precast RC slabs in the 1994 Northridge, California earthquake (magnitude 6.7). This was the case of a car parking building within the Northridge Meadows Apartments complex. The floor collapsed when hollow core planks lost seat and collapsed as complete units due to deficient connection between the hollow core planks and the supporting beams. In other cases, hollow core planks delaminated from the topping slab and collapsed.

Hollow core precast RC floors experienced damage in the 2010/2011 Christchurch, New Zealand earthquakes (Corney, Henry, and Ingham, 2014). Hollow core precast RC planks were widely used in Christchurch at the time of the earthquake. Damage was particularly observed in multistoried RC buildings. Cracks were observed at the joints between precast planks, and also along the interface between the planks and the adjacent RC beams. These cracks were attributed to beam elongation in plastic hinges, since the buildings were designed as ductile RC moment frames with plastic hinges forming predominantly in the beams. RC floors in these buildings had concrete topping (usually 50 mm thick) reinforced with steel mesh which was found to be made of non-ductile steel. As a result, significant cracking occurred in the topping and mesh fracture was also observed. These cracks caused increased flexibility and noticeable sagging of the floor diaphragm. MBIE (2017) reported damage of precast RC floor slabs in a multi-story RC frame building in the 2016 Kaikōura, New Zealand earthquake (magnitude 7.6). Although the building had double tee

precast floor unit (as opposed to hollow core plank), the findings are similar to buildings with hollow core precast RC floors.

a) b)

Figure 3-39. Damage of precast RC frame buildings in past earthquakes: a) the 1988 Spitak, Armenia earthquake, and b) the 1994 Shikotansk, Russia earthquake (Photos: M. Klyachko; Khakimov and Nurtaev, 2002).

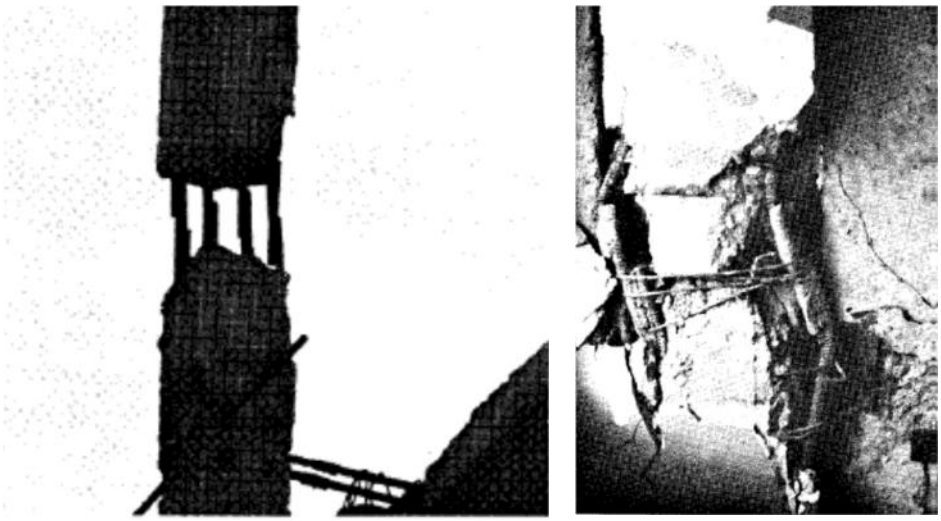

a) b)

Figure 3-40. Details of precast RC frame construction in Armenia at the time of the 1988 Spitak earthquake: a) column splice during construction, and b) failure of the column splice in the earthquake (Photos: Wylie and Lew, 1989).

Figure 3-41. Collapse of a 5-storey precast RC frame building in Spitak due to the 1988 Armenia earthquake was attributed to poor performance of hollow core precast RC slabs (Photo: Wylie and Lew, 1989).

3.7 Current Seismic Assessment Approaches in the Kyrgyz Republic

The methodology for assessing seismic safety of buildings in the KR is prescribed by the code СниП 22-01-98 КР. This code provides a framework for seismic assessment of all existing buildings in the KR, including school buildings. According to paragraph 2.1 of the Code, seismic assessment needs to be performed in the following stages: 1) conduct a preliminary field survey of the building; 2) analyze design documentation and materials of engineering and geological surveys; 3) identify a subgroup of the building (Section 3) and identify the necessary stages of seismic assessment (Sections 5 to 11); 4) conduct a detailed building survey with an assessment of the actual building condition, determine the strength characteristics of materials, identify defects, and perform testing of individual building elements or entire building; 5) perform an assessment of the compliance of structural solutions of load-bearing structures with the requirements of existing regulatory documents; 6) perform the calculations and analytical assessment; 7) prepare a technical report; and 8) consider the findings at the scientific and technical council of the organization. Section 3 of the Code provides a classification of buildings into 10 main structural systems. For example, Group 1 includes masonry wall structures, Group 2 includes RC frames, and Group 3 includes large panel RC buildings. Each of these groups is further divided into subgroups. For example, Group 1 (masonry buildings) is divided into 5 subgroups. Section 4 of the Code provides a damage grade classification for various groups (masonry, large panel buildings, etc.). The remaining sections outline the methodology for seismic assessment of various building groups and subgroups, depending on the earthquake intensity.

3.8 Past Seismic Assessment Studies of School Buildings in the Kyrgyz Republic

There were a few studies regarding the seismic safety assessment of school buildings in the KR. The most comprehensive seismic assessment study was sponsored by UNICEF in 2012 and 2013 (UNICEF, 2013; 2014). A rapid seismic assessment of 806 kindergartens (preschools) and 2,222 schools was performed by the State Institute for Earthquake Engineering and Design (formerly Kyrgyz Scientific and Research Institute for Seismic-Proof Construction) (GIISSiIP). According to UNICEF (2013), all surveyed buildings were classified as Low, Medium or High Safety, depending on the seismic hazard and the type of

construction. The results indicate that more than 80 % of all surveyed kindergartens and schools have “Low Seismic Safety” rating, which is due to their low seismic resistance (termed “seismic supportability” in the UNICEF report). These buildings were classified as “Level III seismic supportability”, on a scale where level IV means “no seismic resistance” and prohibits building operation. An implication of this rating is that “urgent actions to improve seismic resistance are required” (UNICEF, 2013). The results of the study are available in a form of an online database hosted by CAIAG (2014).

The UNICEF project involved rapid assessment of buildings, which consisted of 2- to 3-hour long visual assessment per building (without performing any engineering calculations). This is a common approach for post-earthquake assessment of a large building inventory, known as the ATC-20 methodology in North America (ATC, 1989). This process is usually followed by a more detailed assessment, which involves engineering calculations and more accurate estimate of seismic safety and associated retrofit needs. It should be noted that a detailed seismic assessment of 47 buildings (35 schools and 12 kindergartens) was also sponsored by the UNICEF in 2014 and 2015.

3.9 References

ArBuild (2017). Каркасно-панельные здания, их конструктивное решение (Frame-Panel Buildings. Structural Design) (in Russian) http://www.arbuild.ru/gziik/krzd/58-karkasno-panelnye-zdaniyaih-konstruktivnoe-reshenie.html retrieved May 9, 2017.

Arup (2016). World Bank Measuring Seismic Risk in Kyrgyz Republic, Development of Exposure Model. Ove Arup and Partners International Ltd, 240323_EX_EXP001, Revision 1 | 23 December 2016.

Arup (2017). World Bank Measuring Seismic Risk in Kyrgyz Republic, Seismic Risk Assessment Technical Report. Ove Arup and Partners International Ltd, 240323, Draft 1, 09 March 2017

Astroza, M., Moroni, O., Brzev, S., and Tanner, J. (2012). Seismic Performance of Engineered Masonry Buildings in the 2010 Maule Earthquake. Special Issue on the 2010 Chile Earthquake, Earthquake Spectra, Vol. 28, No. S1, pp. S385-S406.

ATC (1989). ATC-20 Procedures for Post-Earthquake Safety Evaluation of Buildings, Applied Technology Council, Redmond City, CA, USA.

Begaliev,U.T. and Uranova, S. (2002). Single-family brick masonry house. Report #36, World-Housing Encyclopedia, Earthquake Engineering Research Institute, Oakland, CA, USA (www.world-housing.net).

Brzev, S., Pandey, B., Maharjan, D.K., Ventura, C. (2017) Seismic vulnerability index for low rise composite reinforced concrete and masonry buildings in Nepal, Paper No. 3522, Proceedings of 16th World Conference on Earthquake Engineering, Santiago, Chile.

Brzev, S., Pandey, B., Maharjan, D.K., and Ventura, C. (2017a). Seismic Vulnerability Assessment of Low-Rise Reinforced Concrete Buildings Affected by the 2015 Gorkha, Nepal Earthquake, Earthquake Spectra, Special Issue on the 2015 Gorkha, Nepal earthquake, Vol. 33, No. S1, pp. S275-S298.

Brzev, S., Pandey, B., Pao, J. (2017). Urban Housing: Performance of Reinforced Concrete Buildings, Chapter 5, Report on Earthquake Reconnaissance of the M7.8 Gorkha, Nepal Earthquake on April 25, 2015 and its Aftershocks, Canadian Association of Earthquake Engineering, Vancouver, Canada (http://caee.ca/uploads/CAEE%20Nepal%20Report%202015%20-%20ISBN%20978-0-9685376-2-6r.pdf).

Bull, D.K. (2004). Understanding the Complexities of Designing Diaphragms in Buildings for Earthquakes, Bulletin of the New Zealand Society for Earthquake Engineering, Vol. 37, No.2, pp. 70-88.

CAIAG (2014). Schools and Pre-Schools Safety, Central Asian Institute for Applied Geosciences, Bishkek, Kyrgyz Republic (http://schooldb.caiag.kg).

Corney, S. R., Henry, R. S., & Ingham, J. M. (2014). Performance of Precast Concrete Floor Systems during the 2010/2011 Canterbury Earthquake Series, Magazine of Concrete Research, Vol. 66, No.11, pp. 563-575.

D'Ayala,D. and Speranza,E. (2003). Definition of Collapse Mechanisms and Seismic Vulnerability of Historic Masonry Buildings. Earthquake Spectra, Earthquake Engineering Research Institute, Vol. 19, No. 3, pp. 479-509.

FEMA 154 (1988). Rapid Visual Screening of Buildings for Potential Seismic Hazard: A Handbook (same as ATC-21). Federal Emergency Management Agency, Washington D.C., USA.

FEMA 547 (2006). Techniques for the Seismic Rehabilitation of Existing Buildings. Federal Emergency Management Agency, Washington D.C., USA.

Fenwick, R. C., Bull, D. K. and Gardiner, D. R. (2010). Assessment of Hollow-core Floors for Seismic Performance, Research Report, 2010-02, Department of Civil and Natural Resources Engineering, University of Canterbury, New Zealand, ISSN 1172-9511 (https://ir.canterbury.ac.nz/handle/10092/4211).

Госстрое СССР (1964). Серия ИИС-04-10 Выпуск 1. Монтажные узлы и детали для зданий 1 - 4 этажа, Государственный комитет по гражданскому строительству и архитектуре при Госстрое СССР (Gosstroy of the USSR (1964). Series IIS-04-10 Issue 1. Assembly Units and Parts for 1-4-Storey Buildings, State Committee for Civil Construction and Architecture under Gosstroy of the USSR) (in Russian).

Grünthal G. (ed.), Musson R M W, Schwarz J, Stucchi M (1998): European Macroseismic Scale 1998. Cahiers du Centre Européen de Géodynamique et de Séismologie, Volume 15, Luxembourg.

Gulkan,P., Akkar,S., and Yazgan,U. (2003) A Preliminary Engineering Report on the Bingol Earthquake of May 1, 2003. Middle East Technical University, Ankara, Turkey.

Khakimov,S. and Nurtaev,B. (2002). Precast reinforced concrete frame panel system of seria IIS-04. Report #66, World-Housing Encyclopedia, Earthquake Engineering Research Institute, Oakland, CA, USA (www.world-housing.net).

Matthews, J.G, Bull, D.K, and Mander, J.B. (2001). Investigating the Load Paths of Floor Diaphragm Forces following Severe Damaging Earthquakes, Conference Proceedings Combined Concrete Society and Ready Mix, TR24, Rotorua, New Zealand, pp. 122-131.

Matthews. J.G, Bull, D.K., and Mander, J.B. (2003). Background to the Testing of a Precast Concrete Hollow-core Floor Slab Building, Conference Proceedings, 2003 Pacific Conference on Earthquake Engineering, Christchurch, New Zealand.

Matthews, J.G, Bull, D.K., and Mander, J.B. (2003a). Preliminary Results from the Testing of a Precast Hollow-core Floor Slab Building, Conference Proceedings, 2003 Pacific Conference on Earthquake Engineering, Christchurch, New Zealand.

Matthews, J. (2004). Hollow-core Floor Slab Performance following a Severe Earthquake, Doctor of Philosophy Thesis, University of Canterbury, Christchurch, New Zealand.

MBIE (2017). Investigation into the Performance of Statistics House in the 14 November 2016 Kaikōura Earthquake, Ministry of Business, Innovation, and Employment, Government of New Zealand, 36 pp.

Murty, C.V.R, Brzev, S., Faison, H., Comartin,C.D., and Irfanoglu,A. (2006). At Risk: The Seismic Performance of Reinforced Concrete Frame Buildings with Masonry Infills. World Housing Encyclopedia, Earthquake Engineering Research Institute, Oakland, California, U.S.A., Publication WHE-2006-03, 70 pp (www.world-housing.net/tutorials/reinforced-concrete-frames-tutorials).

Murty, C.V.R. (2010). Earthquake Tips – Learning Earthquake Design and Construction. Indian Institute of Technology Kanpur and Building Materials and Technology Promotion Council, India.

Norton, J.A, King, A.B, Bull, D.K, Chapman, H.E, McVerry, G.H, Larkin, T.J, and Spring, K.C. (1994). Northridge Earthquake Reconnaissance Report, Bulletin of the New Zealand National Society for Earthquake Engineering, Vol. 27, No.4, pp. 235-339.

Paci-Green, R., Pandey,B., Friedman,R. (2015). Safer Schools, Resilient Communities: A Comparative Assessment of School Safety after the 2015 Nepal Earthquakes, Risk RED (http://riskred.wix.com/riskrednepal#!reports/c1qbl).

Pandey, B. (2017). Performance of School Buildings. Report on Earthquake Reconnaissance of the M7.8 Gorkha, Nepal Earthquake on April 25, 2015 and its Aftershocks, Canadian Association for Earthquake Engineering, Vancouver, Canada.

Paulay, T. and Priestley, M.J.N. (1992). Seismic Design of Concrete and Masonry Buildings, John Wiley and Sons, Inc., New York, USA, 744 pp.

Remstroyinfo (2017). (2017). RC Wall Panel-Column Connections (Узлы крепления стеновых железобетонных панелей к колоннам) (in Russian). http://www.remstroyinfo.ru/tom10/tom1014.php retrieved May 9, 2017.

SESOC (2017). Framed Buildings with Precast Concrete Floor Systems. Interim Note – March 2017, Structural Engineering Society New Zealand, New Zealand Society for Earthquake Engineering, New Zealand Concrete Society, Ministry of Business, Innovation, and Employment, Government of New Zealand, 4 pp. (https://www.building.govt.nz/building-code-compliance/b-stability/b1-structure/framed-buildings-precast-concrete-floor-systems/)

SESOC (2009). Seismic Performance of Hollow Core Floor Systems: Guidelines for Design Assessment and Retrofit, Preliminary Draft – April 2009, Structural Engineering Society New Zealand, New Zealand Society for Earthquake Engineering and New Zealand Concrete Society, Department of Building and Housing, New Zealand (https://www.nzsee.org.nz/db/PUBS/HollowCoreFloorSystems.pdf).

SNZ (2006). NSZ 3101:2006 Concrete Structure Standard Part 1: The design of concrete standards, Standards New Zealand, Wellington, New Zealand.

UNICEF (2013). Methodology and Tools for Safety Assessment of Schools and Pre-Schools in Kyrgyzstan, United Nations Children's Fund.

UNICEF (2014). Assessment of Safety in School and Pre-School Education Institutions in the Kyrgyz Republic: Summary Report, United Nations Children's Fund.

Uranova,S. and Begaliev,U.T. (2002). Two-story unreinforced brick masonry building with wooden floors. Report #41, World-Housing Encyclopedia, Earthquake Engineering Research Institute, Oakland, CA, USA (www.world-housing.net).

Wieland, M. et al. (2015). A Multiscale Exposure Model for Seismic Risk Assessment in Central Asia, Seismological Research Letters Volume 86, Number 1, pp. 210-222.

Wylie, L.A. and Lew, H.S. (1989). Performance of Engineered Structures, Chapter 6, Special Supplement: Armenia Earthquake Reconnaissance Report, Earthquake Spectra, Vol. 5, No. S1, pp. 70-92.

СН-8-57. Нормы и правила строительство в сейсмических районах (Norms and Rules for Construction in Seismic Regions) (in Russian).

СниП 22-01-98 КР Оценка сейсмостойкости зданий существующей застройки (Assessment of seismic safety of buildings) (in Russian).

4 Seismic Retrofitting Strategies and Techniques for Reinforced Concrete and Masonry Buildings

4.1 *Introduction*

Many older existing buildings are vulnerable to earthquake effects due to inadequate design, construction and detailing practices, which may lead to damage or even collapse in major earthquakes. These older buildings do not meet the current seismic design code requirements. Contemporary seismic codes contain more stringent requirements in terms of design provisions and seismic hazard levels compared to older codes. It is also true that the knowledge regarding detailing and construction practices for some building typologies, e.g. RC buildings, has evolved over the last few decades. Older RC buildings do not have many seismic features which are necessary for satisfactory ductile seismic performance. Other building typologies, like unreinforced masonry buildings, are inherently vulnerable to seismic effects and have shown poor performance in past earthquakes in several countries. Some countries have developed and implemented comprehensive programs to retrofit unreinforced masonry buildings (e.g. California, USA). Governments in several countries have undertaken retrofit programs for school buildings, e.g. Iran, Canada (Province of British Columbia), Peru, USA, Italy, Portugal, Nepal, etc.

The following terms are related to seismic retrofitting of buildings:

- *Rehabilitation* can be used to describe all types of repair and retrofitting (strengthening) that leads to reduced earthquake vulnerability.
- *Repair* is defined as restoring the original characteristics of a damaged section or a structural element.
- *Retrofit* (or *strengthening*) is defined as intervention that leads to enhancement of one or more seismic response parameters of the structure or structural element (stiffness, capacity, ductility, etc.).

Retrofitting technique is a technical option for enhancing the capacity, stiffness, and/or ductility of a structure or a structural element with respect to resisting earthquake effects. For example, several columns in an existing RC buildings or walls in a masonry building may be retrofitted using RC jacketing (a seismic retrofitting technique). Several retrofitting techniques for RC and masonry buildings will be discussed in this chapter.

A seismic *retrofit scheme* is a combination of retrofitting techniques applied to different structural elements in the same structure. For example, a retrofit scheme for a masonry building may involve seismic retrofitting of walls as well as floor and roof diaphragms. A retrofit scheme depends on the building typology and the corresponding seismic deficiencies.

The purpose of this chapter is to outline seismic retrofitting process, different approaches and strategies for seismic retrofitting, and present seismic retrofitting techniques which are feasible for RC and masonry buildings. It should be noted that the focus here is on the techniques appropriate for selected school building typologies which have been included in the Manual. This chapter presents necessary background for the retrofit case studies presented in Chapters 5 and 6.

4.2 *Seismic Retrofitting Process*

This section outlines the process for seismic retrofitting which is currently followed in the KR and consists of the following three phases:

1. Assessment of building condition and its seismic resistance, including the geotechnical studies, analyses and calculations according to СНиП 22-01-98 KP. The findings need to

be summarized in a report which outlines alternative retrofit solutions and the recommendations.

2. Detailed retrofit design, including architectural planning and engineering aspects (electric power scheme, water supply etc.). The retrofit design should contain all relevant information regarding the construction of new structural elements and retrofitting of the existing structural elements, including the drawings, the results of seismic analysis, and the design calculations.
3. Approval by the State Expertise based on the material prepared in the 1st and 2nd phase.

Seismic assessment of an existing building is performed based on i) verifying the compliance of the building and its structural elements to the requirements of the seismic design code СНиП КР 20-02:2009 and applicable material-related design codes (RC, steel, masonry); ii) condition assessment of the load-bearing structure; iii) seismic analysis and design calculations, and iii) determining the impact of construction activities on the building function and building occupants.

СНиП 22-01-98 КР addresses seismic assessment of existing buildings in the KR. The assessment of seismic resistance includes the following tasks:

a. Perform a preliminary seismic assessment study;
b. Analyze the design documentation and the results of engineering and geotechnical studies;
c. Classify the building according to SNiP 22-01-98 KR (see Table 3-1 in Chapter 3 for classification of school building typologies in the KR);
d. Conduct a detailed assessment of the actual condition of the structural elements and the entire building; this may include testing of the material properties (strength etc.), identifying defects, and testing of individual structural elements or the entire building;
e. Estimate the compliance of load-bearing structure with regard to the requirements of current building codes and standards;
f. Perform the seismic analysis and design calculations, and
g. Draw the conclusions.

Engineers working on the seismic retrofit projects should be qualified through civil engineering education at university level, plus an additional certification. The qualification certificates are issued by Gosstroy KR after the candidates have attended the required courses and passed the examination.

4.3 *Performance Objectives for Retrofitted Buildings*

4.3.1 Selection of performance objectives

Current KR seismic design code СНиП КР 20-02:2009 specifies the same requirements (and hence performance objectives) for the design of new buildings and retrofitting of the existing ones (refer to Section 2.5.2 for more information regarding the seismic performance levels and seismic performance objectives).

In many other countries, seismic performance objectives for existing buildings are relaxed compared to the new buildings. For example, US standard for existing buildings ASCE/SEI 41-13 (ASCE/SEI, 2014) specifies performance objectives for buildings which are associated with different seismic hazard levels. For example, it is expected that an existing building has Life Safety performance for an earthquake with 20% probability of exceedance in 50 years, but for the higher seismic hazard corresponding to 5% probability of exceedance in 50 years the expected performance level is Collapse Prevention. Note that the US seismic codes use a probabilistic approach for estimating the seismic hazard level for a specific site; this is different from the deterministic approach used for developing seismic hazard maps in the KR

(see Section 2.2.2 for more information regarding the seismic hazard in the KR). In Europe, Eurocode 8 - Part 3 (EN 1998-3:2005) identifies performance levels for existing buildings, but it does not prescribe the corresponding seismic hazard levels. For new buildings, Eurocode 8 - Part 1 recommends the seismic hazard level with 20% probability of exceedance in 50 years for the Life Safety performance of regular new buildings (this is same as the Life Safety performance objective for existing buildings according to ASCE/SEI 41-13).

Some codes and guidelines allow higher seismic risk for existing buildings by applying a reduction factor to the code-level seismic forces. For example, International Existing Building Code (ICC, 2012) permits a 75% factor on earthquake loads for seismic assessment and retrofit. Indian standard for seismic evaluation and strengthening of RC buildings (BIS, 2013) also permits a reduction in the code-level seismic forces prescribed for new buildings depending on the remaining useful life for an existing building. The maximum permitted reduction is 30%; this corresponds to a 70% multiplier on the code-level seismic forces for new buildings.

4.3.2 Seismic assessment of existing buildings: force-based versus performance-based approaches

Seismic assessment is an important task in the seismic retrofit process, as discussed in Section 4.2. When a detailed seismic assessment is performed, seismic deficiencies for an existing building can be identified by analyzing a numerical model of the structure which is subjected to code-level seismic forces (according to СНиП КР 20-02:2009). The analysis results provide information regarding the *seismic demand*, in terms of lateral displacements (drift) and internal forces (bending moments, shear and axial forces). When a linear elastic analysis is performed (modal analysis according to СНиП КР 20-02:2009), it is important to verify whether the capacity of structural elements is less that the seismic demand. This is often referred to as Capacity/Demand ratio, or C/D ratio; alternatively, an inverse value of this ratio, that is, Demand/Capacity ratio (DCR), can be used. For example, a C/D ratio for RC beams may be obtained by checking flexural (bending moment) and shear capacities against the seismic demand (earthquake-induced bending moments and shear forces) at the critical locations within a beam. This is illustrated through an RC building case study in Chapter 5 of the Manual. The СНиП КР 20-02:2009 also specifies lateral interstory displacement restrictions for buildings, which ensure that the structure is not excessively flexible.

The above outlined approach is force-based and is no longer considered feasible for the seismic assessment of existing buildings in the USA, Japan, and many European countries. Current trend in building codes and standards in some countries is to follow performance-based approach for assessing the seismic capacity of existing buildings (refer to Section 2.5 for explanation of the performance-based seismic design approach). The application of performance-based seismic approach offers more flexibility to the building owners in selecting suitable performance objectives for a specific building (as discussed in Section 4.3.1). Application of performance-based approach requires the use of nonlinear seismic analysis for assessment of existing buildings (refer to Section 2.5 for a discussion on nonlinear seismic analysis).

4.4 *Feasibility of Seismic Retrofitting*

Seismic retrofitting of existing buildings is a voluntary activity in most countries. An existing building is usually required to comply with the provisions of current seismic design code in case of a building renovation which involves some structural changes, e.g. addition of floors which result in an increase in the building weight). In the KR, seismic retrofitting of an existing building is required in case of building renovation, based on the estimation of its seismic resistance (Cl. 5.1.2 and 5.1.5 of ГОСТ 31937-2011, Cl. 2.10 of СНиП 22-01-98 КР, Sections 8 and 9 of СНиП 31-01-99, and Section 12 of СП 63.13330-2012).

When an existing building is considered for seismic retrofitting, the owner and other stakeholders usually compare the costs of retrofitting and replacement (where replacement denotes construction of a new building based on the current material and construction rates). It is a common practice to consider replacement of a building when retrofit cost exceeds 50% of the replacement cost, and/or the safety of a building is grossly inadequate. The final decision (retrofitting or replacement) is usually made after considering several factors, including the extent of seismic deficiency/ies, the building's importance, its overall condition, date of construction (age), target life, heritage value, site location (urban/rural), availability of construction materials and skilled construction labor, availability of equipment and skills required to perform demolition (in case it is required), etc.

4.5 *Retrofitting Strategies*

Seismic retrofitting schemes should be designed to enhance the performance of an existing structure to meet the desired Performance Objective. One or more seismic retrofitting techniques need to be identified based on the seismic assessment of the existing structure. The retrofit can result in enhancing capacity and/or stiffness and/or ductility of the existing structure, as discussed in Section 4.5.1.

The most common retrofitting strategies are local and global retrofitting, which are discussed in Section 4.5.2. Additional seismic retrofitting strategies are (ASCE/SEI, 2014):

- Removal or reduction of existing irregularities, including stiffness, mass, and capacity irregularities, torsional irregularity, soft story etc. This can be achieved by custom-designed addition of new structural elements and/or retrofitting of the selected existing structural elements.
- Mass reduction can be beneficial since it decreases the seismic mass of the structure, which in turn decreases the seismic force. Mass reduction can be achieved through demolition of upper stories, replacement of heavy cladding and interior partitions, etc.
- Seismic isolation, which is achieved by installing seismic isolation devices, usually at the base of the building, to modify dynamic characteristics of the structure and reduce its seismic demand.
- Passive energy dissipation devices installed at various locations within a building to increase damping level which results in a reduced seismic demand.

4.5.1 Enhancement of ductility, capacity and/or stiffness of the building

One of the common goals of seismic retrofitting is to enhance the capacity, stiffness and/or ductility of the existing building (FIB, 2003). Figure 4-1 shows capacity curves obtained from nonlinear static analysis of the existing and retrofitted building (Thermou, Pantazopoulou, and Elnashai, 2004). The enhancement of ductility (deformation capacity) is illustrated in Figure 4-1a), and it may be feasible for existing RC buildings with poor detailing, e.g. widely spaced transverse reinforcement (stirrups/ties) or insufficient lap splicing in existing structural elements. Deformation capacity can be increased without significant modifications of the overall stiffness and resistance (capacity), hence the displacement demands remain unchanged as a result of the retrofit. The ductility enhancement can be achieved through several retrofit techniques, such as RC or FRP jacketing of existing RC columns and beams. An effective way of increasing the displacement capacity is by changing the failure modes in existing structural elements from brittle to ductile. An example is increasing shear capacity of the existing RC columns to prevent shear failure.

Stiffness and capacity enhancement (illustrated in Figure 4-1b) are feasible for retrofitting of the existing buildings characterized by low ductility. This approach is effective when an existing building has several structural elements which are expected to fail at small lateral deflections. Addition of new RC shear walls or steel bracings are examples of effective retrofitting techniques for enhancing both the capacity and stiffness of existing buildings.

Stiffness, capacity, and ductility enhancement (illustrated in Figure 4-1c) are suitable for existing buildings with low capacity, or where seismic demand is high due to high seismic hazard.

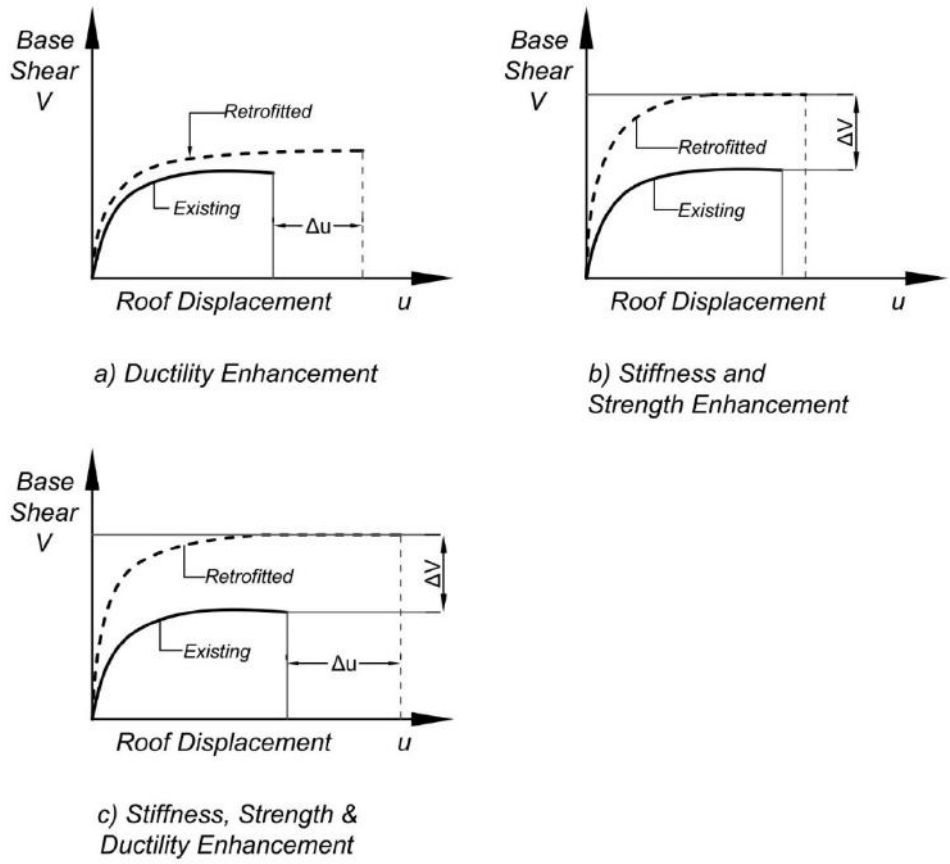

Figure 4-1. Seismic retrofitting goals (based on Thermou, Pantazopoulou, and Elnashai, 2004).

4.5.2 Local versus global retrofitting

Local and global retrofitting are two common approaches considered for seismic retrofitting of existing buildings. An overview of these approaches is given in ASCE/SEI 41-13 (2014), FEMA 547 (2006), etc.

Local retrofitting, that is, retrofitting at the structural member level, is deemed appropriate when an existing building is characterized by a substantial capacity and stiffness, but some of its structural elements may not have adequate capacity or deformation capacity to satisfy the Performance Objectives. An appropriate strategy for such structures may be to perform local modifications of structural members that are inadequate while retaining the basic configuration of the building's seismic-force-resisting system. Local modifications may include seismic retrofitting of a structural element in terms of the connectivity, capacity, ductility, or all three. A local retrofitting strategy tends to be the most economical retrofit approach where only a few of the building's structural elements are inadequate. An example of a local seismic retrofitting approach is RC jacketing of a few selected columns and beams in an RC building (see Section 4.7.2 for more information regarding the RC jacketing). Another example is addition of new RC shear walls or steel bracings within a specific floor level, to mitigate the effects of a soft (weak) story in a building.

Global retrofitting, that is, retrofitting at the structure level, involves global modification of the structural system, and is deemed appropriate for flexible structural systems and/or systems with an incomplete lateral load path. Global retrofitting is a suitable approach for increasing the stiffness of an existing structure. For example, new RC shear walls may be added to increase stiffness of an RC frame. A global retrofit may lead to a decrease in seismic demand (magnitude of internal forces and/or lateral displacements) in the existing structure. Global retrofitting may result in an increase in the lateral capacity of an existing structure.

Figure 4-2 shows capacity curves obtained from nonlinear static analysis of an existing building (before the retrofit) and a retrofitted building (see Section 2.5 for more information on nonlinear seismic analysis). It can be seen from Figure 4-2a) that local retrofitting does not lead to a significant capacity increase, but it results in a ductility increase. The retrofitted building shows better performance than the existing building at the target displacement level. Figure 4-2b) shows an example of global retrofitting. It can be seen from the figure that the retrofitted building has a significantly higher capacity and ductility than the existing building. Note that the target displacement for retrofitted building is less than for the existing building due to an increase in stiffness due to retrofit.

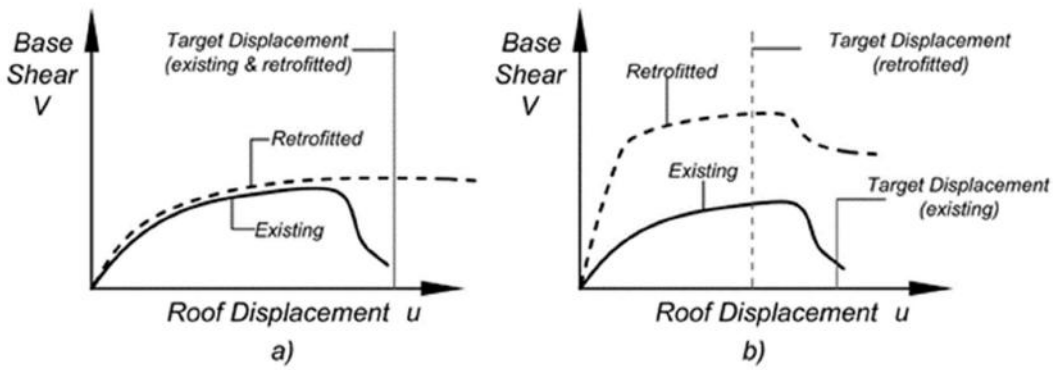

Figure 4-2. Retrofitting approaches: a) local and b) global (based on Moehle, 2000).

4.6 *Addition of New Structural Elements*

As discussed in Section 4.5.2, seismic retrofitting of RC and masonry buildings can be accomplished by either local or global retrofitting. Addition of new structural elements, such as RC shear walls (Section 4.6.1) and steel bracings (Section 4.6.2), can be used in both cases.

Addition of new structural elements is frequently used in seismic retrofitting projects and is considered to be an efficient seismic retrofit approach. The choice of type, number and size of the added elements depends on the specific structure and the functional layout of the building.

It is expected that addition of new structural elements in an existing building is likely going to change its dynamic properties and seismic response. A stiffness increase of the existing structure is likely going to cause an increase in the seismic forces.

These general guidelines may be followed when addition of new structural elements is considered as a retrofit approach:

1) New structural elements should be uniformly placed throughout the structure to avoid large concentration of forces in the existing structural elements with limited resistance and/or ductility capacity.
2) Whenever possible, new structural elements should be distributed in such a manner to reduce the effects of torsion and irregularities.

3) Added structural elements should result in an increase in capacity, stiffness, and ductility for the retrofitted structure.
4) Connections between the new structural elements and the existing structure must be sufficiently strong to transfer internal seismic forces.
5) It is critical to ensure displacement compatibility between the existing and new structural elements.

Examples of layouts of new structural elements are shown in Figure 4-3. New structural elements should be distributed uniformly in a building with flexible diaphragms (Figure 4-3a). Distance between the added structural elements can be larger in buildings with rigid diaphragms (Figure 4-3b). It is desirable to ensure a symmetrical layout of added elements (Figure 4-3c). Layout shown in Figure 4-3d) is undesirable because the elements in longitudinal direction are aligned on one end of the building (as opposed to being placed along both exterior gridlines). Also, layout with the added elements in transverse direction which are too close to one another is not deemed efficient for resisting torsional effects.

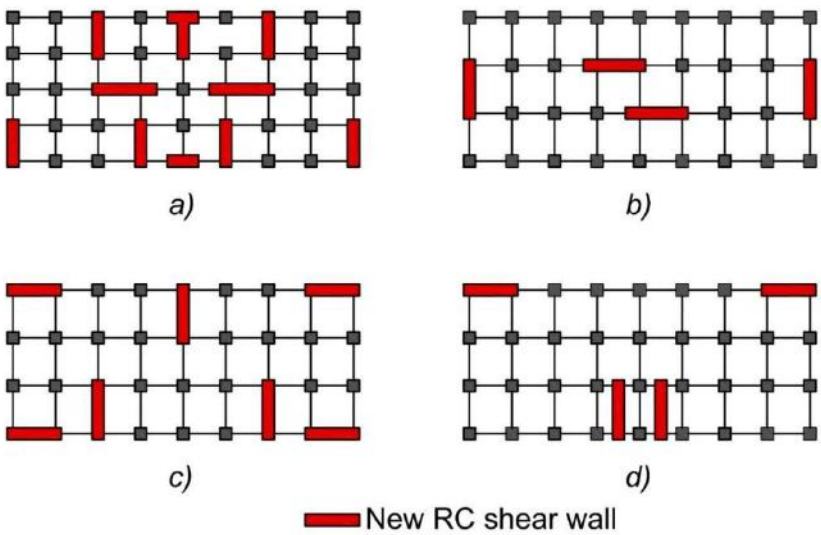

Figure 4-3. Possible layouts of new structural elements (RC shear walls) for retrofitting an existing RC structure (based on UNIDO, 1983).

New structural elements can be designed to resist the entire lateral load; this is particularly advantageous if the existing frame has an unfavorable failure mechanism.

The analysis model for a retrofitted building needs to take into account the effect of both the existing and new structural elements. In some cases, added elements may have similar stiffness as the elements of the existing building, hence the seismic forces should be distributed among the existing and new structural elements. In other cases, new structural elements (e.g. RC shear walls) may have a significantly higher stiffness than the existing structure. In that case, new shear walls should be sufficiently strong and stiff to resist the entire seismic load applied to the structure.

Addition of RC shear walls and steel bracings are discussed next. Note that the research basis for these techniques has been presented in Appendix A.

4.6.1 Addition of reinforced concrete shear walls

4.6.1.1 Seismic deficiencies addressed by this retrofit technique

New RC shear walls can be added when an existing building has inadequate shear capacity and or/inadequate stiffness. This retrofit technique has the following advantages: it results in

a decrease of lateral displacements (drifts) in the existing structure and it can prevent a soft story mechanism in RC structures. It can also mitigate the effects of plan and vertical irregularities.

4.6.1.2 Description

New RC shear walls are usually constructed in-situ and need to be provided continuously from the foundation to the roof level. The shear walls can be constructed both at the exterior and the interior of the building. Construction of shear walls at the building exterior causes less disruption to the building occupants. However, new shear walls at the exterior will likely influence the appearance of façade. The exterior walls are connected to the existing floor and roof diaphragms, usually by means of steel anchors embedded in the existing RC beams or floor slabs. *Figure 4-4* shows exterior application of RC shear walls at the perimeter of an existing RC frame building. New shear walls are connected to the building at the floor levels through anchors embedded into the existing perimeter (edge) beams.

Interior RC shear walls are connected to the floor/roof structure by means of vertical (longitudinal) reinforcement which passes through the holes drilled into the existing beams and slabs (see *Figure 4-7*).

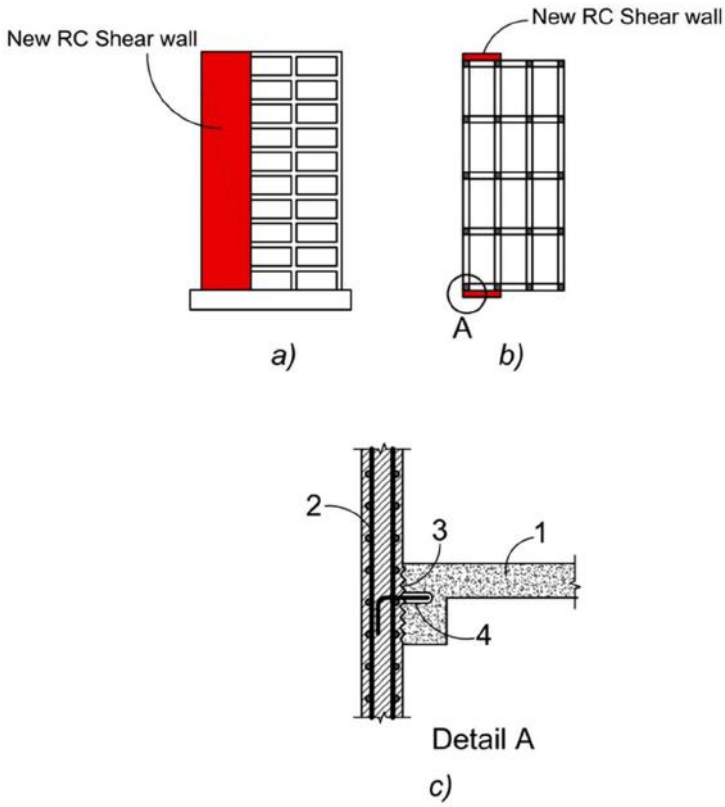

Figure 4-4. Addition of new RC shear walls at the perimeter: a) elevation view; b) plan view, and c) wall-to-floor connection (1- existing RC slab; 2- new RC shear wall; 3- roughened interface between the new and existing concrete; 4- steel anchors).

New shear walls can be integrated with the existing RC frame structure by encasing RC columns (*Figure 4-5*).

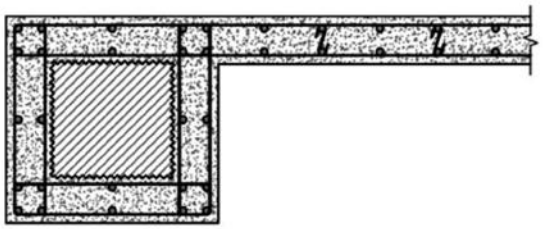

Figure 4-5. A new RC shear wall encases an existing RC column.

Alternatively, new RC shear walls can be constructed as “wing walls” at each side of an existing RC column (Figure 4-6). These wing walls are usually placed symmetrically with regard to an existing RC column. They can either be attached to an existing column (Figure 4-6a) or separated by a gap (Figure 4-6b). Alternatively, wing walls can encase the existing column (Figure 4-6c and d). In any case, continuity of the vertical reinforcement up the wall height must be ensured.

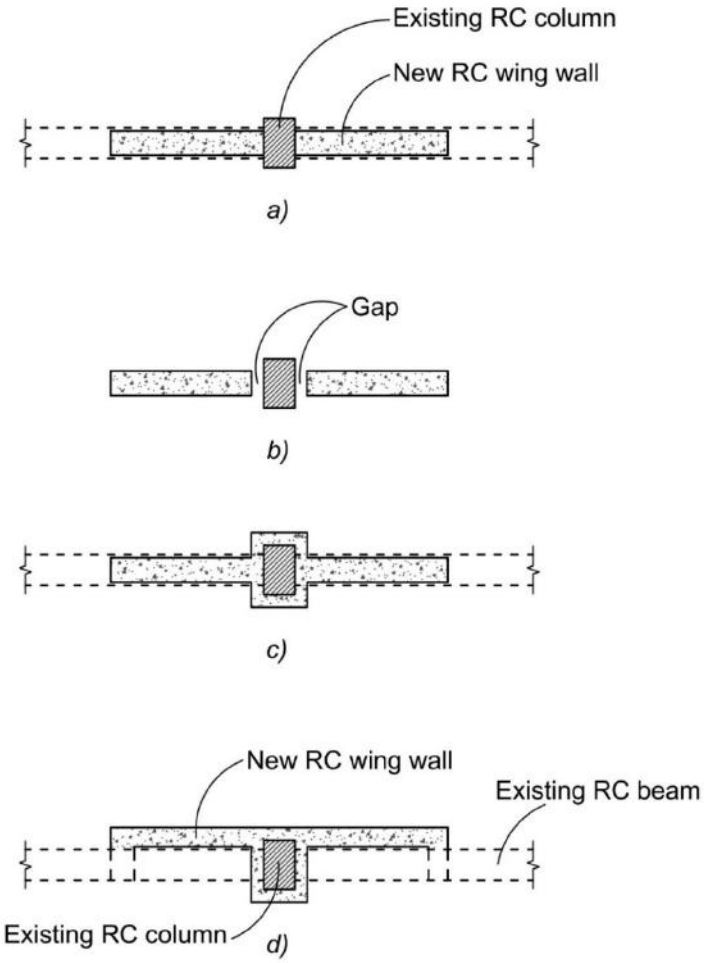

Figure 4-6. RC wing walls: a) wing walls integrated with an existing RC column; b) wing walls with a gap between the new wall and the existing RC column; c) interior wing walls enclosing an existing RC column, and d) exterior wing walls enclosing an existing RC column.

4.6.1.3 Analysis and design considerations

The key considerations for design of RC shear walls are discussed next.

Interaction between new RC shear walls and the existing structure

One of the critical design considerations for new RC shear walls in an existing structure is to ensure that lateral displacements in the existing structure are within the acceptable limits set by the code. Numerical model of the retrofitted structure should take into account the stiffness of new RC shear walls and the existing structure.

Wall location within a building (exterior or interior)

The wall location will depend on the specific building configuration and architectural plan. Addition of RC shear walls is going to impact exterior appearance of the building and may require changes in building function. During the planning stage it is important to consider the original building plan and layout of existing frame, partition walls, corridors, door and window openings, etc.

It is possible to place new walls at the exterior and/or interior of the building. It may be easier to construct new walls at the exterior of the building because of the easier construction access. The construction cost is likely going to be less for exterior than for interior walls. It is easier to ensure the continuity of vertical reinforcement in exterior walls, particularly when the wall is placed outside of the frame gridlines. The shear walls must be connected to the existing structure at the floor levels, as discussed earlier. The solution involving new exterior RC walls may have a negative impact on the building appearance and may require closure of some windows.

Interior walls placed along the frame lines need to be integrated with the existing beams and floor slabs in order to ensure continuity of vertical reinforcement at floor and roof levels.

Shear wall configuration

New RC shear walls can be either connected to the existing RC columns (integrated with the columns) or placed separately from the columns (*Figure 4-7*). The former approach is suitable when the columns have adequate resistance to act as boundary elements, which are usually provided at the wall ends (Case A, *Figure 4-7*). Also, the beams of the existing frame need to be strong enough to act as coupling beams. Alternatively, it is possible to follow the latter approach and construct RC shear walls separately from the frame (Cases B and C, *Figure 4-7*).

When RC shear walls are placed in the plane of the existing frame, it is necessary to ensure continuity of vertical wall reinforcement by providing holes in the beams and/or slabs at each floor level (Cases A and B, *Figure 4-7*). New shear walls can be separated by a gap from the adjacent columns (Case B, *Figure 4-7*). This arrangement has an advantage over Case A because it does not require provision of horizontal anchors (dowels) that need to be drilled into the existing columns.

Alternatively, new shear walls can be constructed off the frame gridlines (Case C, *Figure 4-7*). Finally, shear walls can be constructed as external buttresses to minimize disruption of the building function.

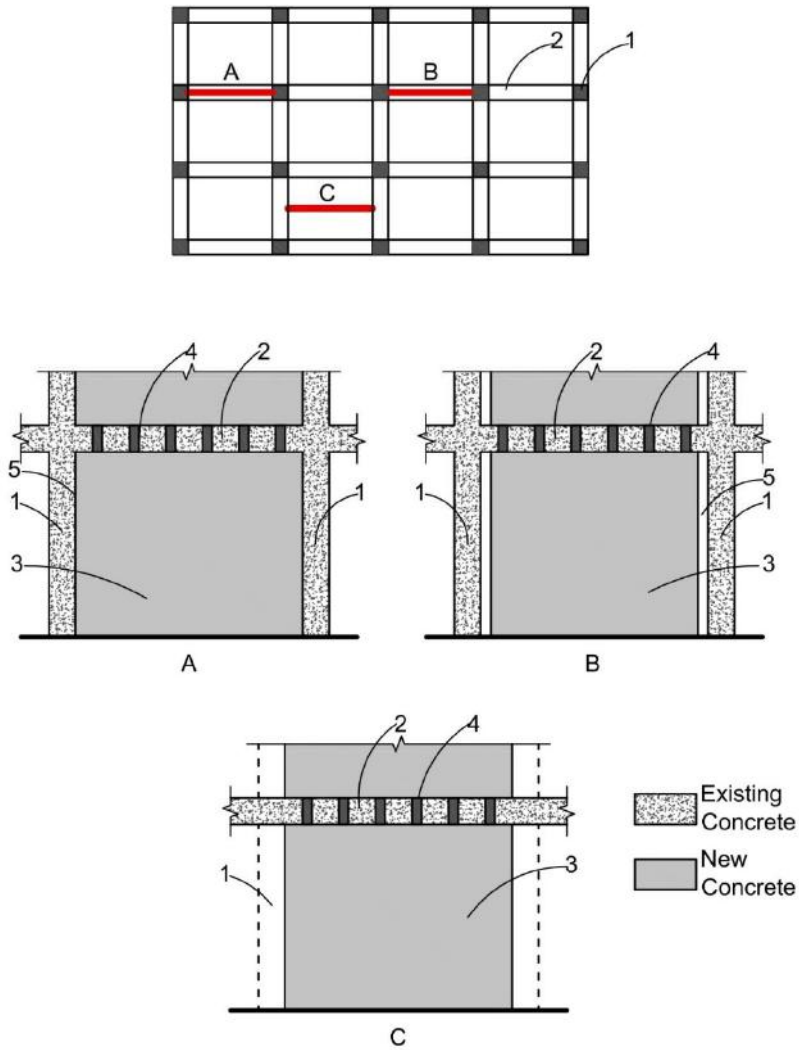

Figure 4-7. Various RC shear wall configurations: A – wall in line with the frame gridline, integrated with the columns; B – wall in line with the frame gridline, with gaps at the ends; C – wall offset with regard to the frame gridline (1- existing RC column; 2- existing RC floor slab; 3- new RC shear wall; 4- holes for passing the longitudinal wall reinforcement; 5- a gap between the new wall and the existing columns).

<u>Wall foundations</u>

A new RC shear wall is usually supported by a new RC foundation, which must be designed to resist the overturning bending moments and shear forces at the base of the wall, which may be high in some cases. Whenever possible, new wall foundations should be integrated with the existing column foundations (see Section 5.7.7 and Figure 5-69). When axial stresses due to the gravity load are much lower than the flexural tensile stresses due to the overturning bending moments, a foundation uplift might occur, unless it is controlled by means of soil anchors (*Figure 4-8*).

Also, shear force at the base of the wall will need to be transferred through the foundation-to-soil interface. A shear key and/or roughening of the foundation-to-soil interface may need to be provided to enhance the shear capacity, as illustrated in *Figure 4-8*.

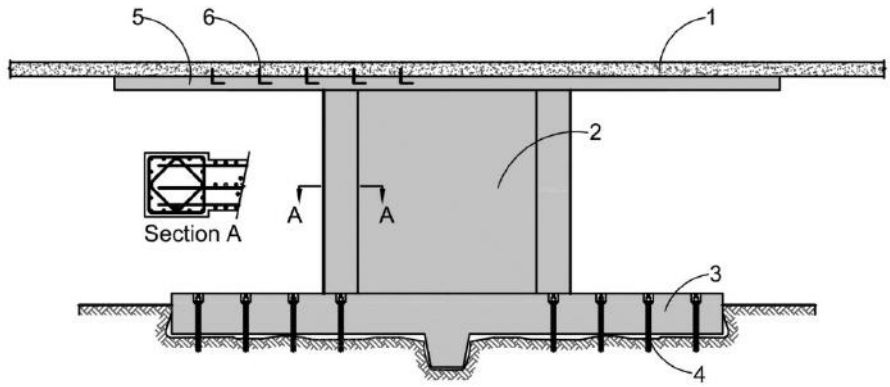

Figure 4-8. New RC shear wall with the foundations – note shear key and soil anchors at the foundation level: 1- existing RC slab; 2- new RC shear wall; 3- new RC foundation; 4- soil anchors; 5- new RC drag strut (collector); 6- steel anchors at the drag strut-to-slab interface (based on Nikolic-Brzev and Sherstobitoff, 1998).

<u>Drag strut (collector)</u>

Drag strut (collector) is a horizontal RC linear element which may need to be constructed between the top of the new RC shear wall and the existing floor/roof slab. A drag strut may be required when existing floor/roof slab does not have adequate shear capacity at the slab-to-wall interface. Drag strut usually extends symmetrically on each side of the shear wall (see *Figure 4-8*) and its length is determined based on the shear capacity of the existing floor/roof slab above the wall. A drag strut is subjected to uniaxial forces (equal to shear force in the RC shear wall), and the amount of longitudinal reinforcement needs to be determined accordingly. The connection between the drag strut and the floor above is achieved through vertical steel anchors (dowels) embedded into the drilled holes in the floor slab and filled with the grout. An example of a drag strut connected to an existing floor slab is shown in *Figure 4-9*a). Alternatively, a drag strut can be connected to an existing RC beam, as shown in *Figure 4-9*b).

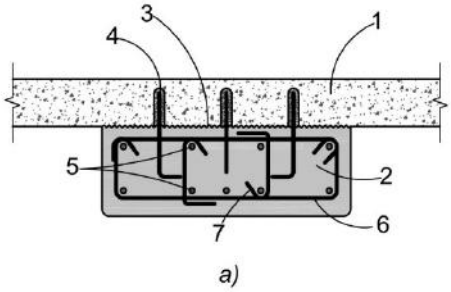

1- Existing RC slab
2- New RC drag strut
3- Roughened interface between the new and existing concrete
4- Steel anchors drilled into the slab
5- Longitudinal reinforcement (drag strut)
6- Steel tie enclosing longitudinal bars
7- Cross-tie providing additional support to the bars

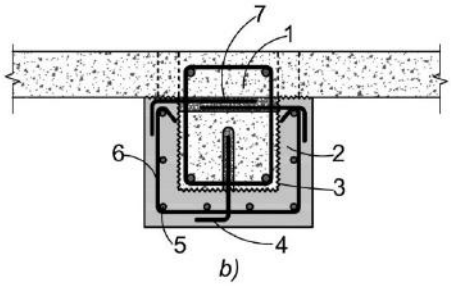

1- Existing RC slab and beam
2- New RC drag strut
3- Roughened interface between the new and existing concrete
4- Steel anchors drilled into the slab
5- Longitudinal reinforcement (drag strut)
6- Steel tie enclosing longitudinal bars
7- Cross-ties passing through a drilled hole in the existing beam

Figure 4-9. RC drag strut: a) connection to an existing floor slab and b) connection to an existing RC beam (based on FEMA 547, 2006)

4.6.1.4 Detailing and construction considerations

Connection between a new RC shear wall and an existing RC beam or floor slab is the most important detail associated with this retrofit technique. The construction joint at the wall-to-underside of floor slab should be able to transfer seismic shear forces from the floor/roof diaphragm to the wall below. The joint capacity must be verified based on the shear friction concept to ensure that the amount of vertical wall reinforcement across the wall-to-slab interface is adequate.

It is recommended to roughen the existing RC beam or floor slab surfaces by sandblasting. The connection between the wall and the existing beam or floor slab can be achieved by creating vertical holes through the slab (see *Figure 4-10*). The holes should be preferably drilled using impact tools (instead of saws or core drills) to avoid cutting or damaging existing beam/slab reinforcement. Vertical wall reinforcement (dowels) need to be placed through these holes. The holes need to be large enough to allow placement and consolidation of concrete for new walls. Hole diameter needs to be larger by at least 25 mm than the vertical reinforcing bar diameter. The spacing of holes depends on the design requirements.

Alternatively, it is possible to drill holes through the existing RC beam from top and bottom and provide chemical anchors. This solution is presented in Section 5.7.7 (see Figure 5-69).

New RC shear walls can be constructed using either cast in-place concrete or shotcrete. If shotcrete is used, it has to be placed directly up to underside of the slab to avoid gaps in the joint.

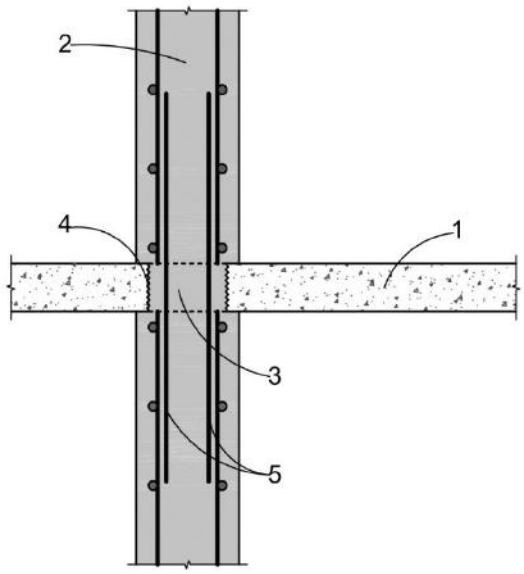

Figure 4-10. Shear wall connection to the existing RC slab: 1- existing RC slab; 2- new RC shear wall; 3- a hole in the existing slab for passing the longitudinal wall reinforcement; 4- roughened interface between the existing and new concrete; 5- longitudinal dowels passing through the hole (based on FEMA 547, 2006).

4.6.1.5 Design applications and performance in past earthquakes

Addition of new RC shear walls has been used as a retrofit technique in several post-earthquake rehabilitation projects, e.g. after the 1999 Turkey earthquakes (Gulkan et al., 2003) and the 2003 Boumerdes, Algeria earthquake. *Figure 4-11* shows retrofitting of an existing RC building with new RC shear walls after the 2003 Algeria earthquake.

4.6.1.6 Design codes and guidelines

Addition of new RC shear walls has been addressed by the following KR codes: СНиП КР 20-02:2009, СП 63.13330-2012, СНиП II-А.12-69*, and a guideline from the Russian Federation (Харьковский Промстройниипроект, НИИЖБ, 1992).

This retrofitting technique has also been addressed by several international codes and guidelines, including UNIDO (1983), JBDPA (2001), FEMA 547 (2006), and FIB (2003).

Figure 4-11. An existing RC frame building retrofitted by constructing new RC shear walls after the 2003 Boumerdes, Algeria earthquake (Photo: M. Farsi).

4.6.2 Addition of steel bracings

4.6.2.1 Seismic deficiencies addressed by this retrofit technique

New steel bracings can be added when an existing building has an inadequate shear capacity and or/inadequate stiffness. This retrofit technique is very effective in increasing the capacity of the existing structure by selecting an appropriate layout of braced panels and/or brace sizes. It should be noted that an increase in lateral stiffness due to the addition of new steel bracing is not significant, so this retrofit technique may not be feasible for application on RC frames with masonry infills (unless infills are separated from the frame). The braces are relatively light and add minimum weight to the structure. It is possible to accommodate openings (doors, windows) within a braced panel, which is not possible with some other retrofit techniques (e.g. addition of new RC shear walls).

4.6.2.2 Description

New steel bracings are placed along the selected frame gridlines and within selected panels in the building and act like a braced frame. The bracings are usually provided continuously from the foundation to the roof level, but it is also possible to install the bracings at selected levels within a building (for example, at a soft story level). *Figure 4-12* shows a typical bracing elevation within an RC frame. It is an inverted-V bracing configuration and the braces are connected to the existing RC columns at the base, and to the existing RC beam at the top.

New bracings can be constructed both at the exterior and the interior of the building. Construction of the bracings at the exterior of the building causes less disruption to the building occupants.

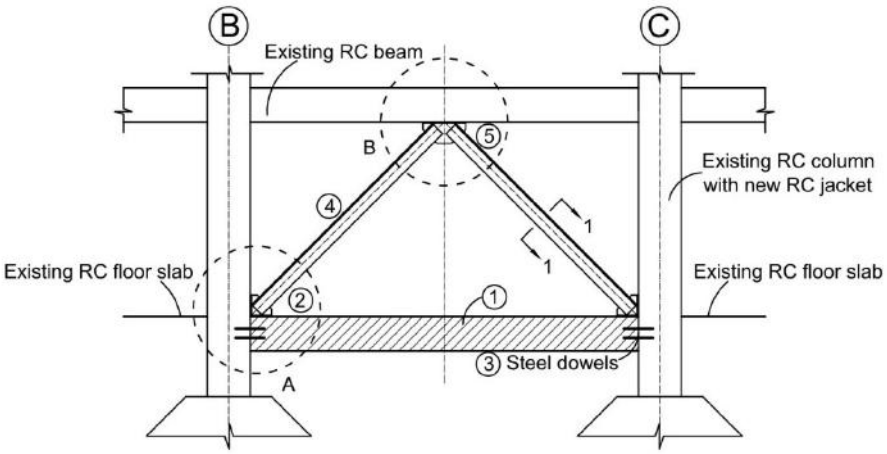

Figure 4-12. Example of added steel bracing in an existing RC frame: 1-new RC tie-beam; 2 – new steel gusset plate for the brace-to-column connection; 3 – steel dowels for brace-to-tie-beam connections (various locations); 4 – new double-angle steel braces; 5 – new steel gusset plate for the brace-to-beam connection.

Most common bracing configurations are concentric braces and (less often) eccentric braces. Different member section types are used for the braces, such as angles, tubes, etc. Various brace configurations are shown in *Figure 4-13*. Types of concentric bracings include diagonal, X-shaped (cross-diagonal bracings), super X-shaped, V-shaped, inverted V- shaped (also known as Chevron bracings), etc.

K-bracings, in which the inclined braces are connected to a point within the clear height of a column, should not be used for seismic retrofit purposes (these bracings are not shown in the figure).

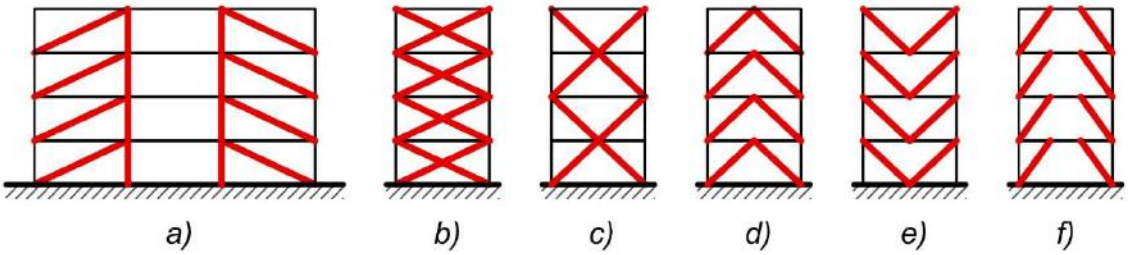

Figure 4-13. Types of bracings: a) diagonal braces; b) X-braces; c) super-X braces; d) inverted-V (Chevron) braces; e) V-braces, and f) eccentric braces.

4.6.2.3 Analysis and design considerations

The key design considerations are discussed next.

<u>Interaction between new steel bracings and the existing structure</u>

One of the critical considerations for designing new steel bracings in existing RC frame structures is to ensure that lateral displacements in the existing RC frame are within the acceptable limits set by the code. Numerical model of the retrofitted structure usually takes into account stiffness of both the new steel bracings and the existing RC frame. Alternatively, it is possible to consider braced frame as the main lateral load-resisting system, and check whether lateral displacements imposed on the braced frame are acceptable for the existing RC building.

Bracing location within a building (exterior or interior)

Bracing location will depend on the configuration and architectural plan for specific building. In the planning stage it is important to consider the original building plan and existing frame layout, partition walls, corridors, door and window openings, etc. It is possible to place new bracings at the exterior and/or the interior of the building. It may be easier to construct new bracings at the exterior of the building because of the easier construction access. The construction cost is likely to be less for exterior than for interior bracings, but exterior bracings are exposed and require more maintenance than interior bracings. Exterior bracings placed parallel to the façade must be connected to the existing RC frame. Interior bracings are usually placed along the existing frame gridlines.

Bracing configuration

When the existing RC columns and beams have adequate capacity and ductility, bracings can be connected directly to the RC frame, that is, beams and columns of the existing frame form chords for the braced frame members. In case of X-bracings, braces are connected to the beam-column joints of the frame, and the internal brace forces are transferred to the existing RC frame members as axial tension and compression. In some cases, these forces are excessively high, hence either some of the frame members may need to be retrofitted or brace layout may need to be revised.

When the resistance of the existing RC beams and columns is not sufficient, which is usually the case in older RC buildings, a full braced frame with vertical and horizontal members can be added (this is also referred to as “rim”) (FIB, 2003). The role of steel members is to strengthen the existing RC frame by resisting the seismic effects (bending moments, axial and shear forces). Horizontal members act as the drag struts which transfer horizontal inertia forces from the slab into the bracing system. Vertical truss members can resist a fraction of axial forces due to gravity load in the columns, and they can act as a backup system for the existing columns (should the columns experience failure in an earthquake). These vertical members also need to provide resistance to lateral seismic forces and the overturning seismic bending moments in the braced panel. These vertical members need to be continuous up the building height (through the existing floor slabs). New vertical steel elements may consist of four vertical angles at the column corners and are connected by means of steel straps welded to the angles; this is similar to Figure 4-25.

It should be noted that the bracing configuration shown in Figure 4-14a) requires less consumption of steel than the configuration shown in Figure 4-14b), but this configuration is more difficult to implement at sites where skilled labor is not available.

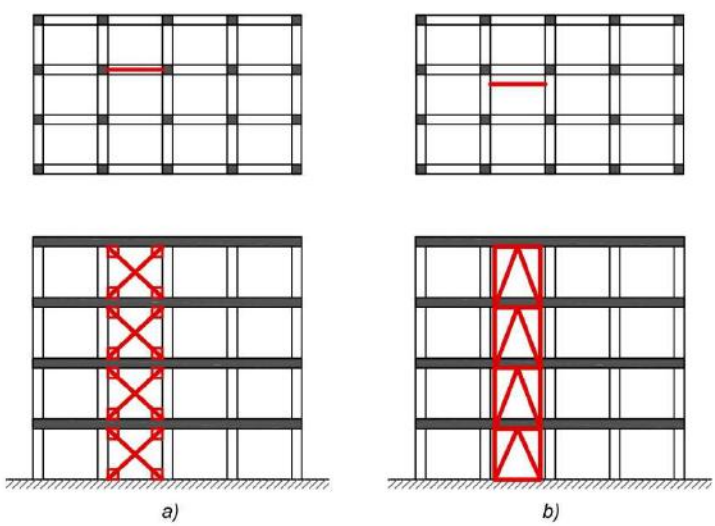

Figure 4-14. Bracing configurations: a) a bracing connected directly to the existing frame (“infill” configuration) and b) a bracing placed alongside of the frame.

The bracings can be either directly fitted into an existing RC frame ("infill" configuration) or constructed alongside of the existing frame. The latter configuration is preferable.

Design considerations for braces

Critical seismic design consideration for the braced frame system is its ability to withstand post-buckling cyclic deformations without experiencing a premature failure.

For the diagonal- and "X"-shaped bracings it is recommended to rely on the tension diagonal to provide lateral load resistance and energy dissipation. Slenderness of braces should be limited to prevent the loss of compression diagonals in post-buckling stage (FIB, 2003). Studies have shown that slenderness ratio should not exceed 80 to ensure a satisfactory hysteretic behavior (Badoux, 1987). Ideally, axial seismic force in a compression brace should be less than its buckling capacity; this will also be beneficial for preventing overloading of the existing frame members.

"V"- and inverted "V"-shaped braces have reduced unbraced lengths of compression braces. In those configurations braces act both in tension and compression, and are able to engage their capacity and dissipation capacity earlier than in X-shaped braces (due to the smaller brace length). On the other hand, horizontal member to which the two braces are connected needs to be designed to resist the balanced vertical load due to internal forces in "V"-braces. The existing RC beams are usually not able to resist these forces and they need to be retrofitted. Alternatively, a new horizontal steel member can be added and connected to the existing RC beam.

Seismic design considerations for steel braced systems were discussed by Sabelli, Roeder, and Hajjar (2013).

Foundations

When bracing is directly connected to the existing RC frame there is no need for a new foundation for the braced panels, but there is a need to construct a RC tie-beam beneath the braced panel at the plinth level. There may be a need to retrofit the existing foundations when axial tensile or compressive forces in the existing columns are excessive. Tie-downs may need to be provided to resist tensile (uplift) forces in the existing RC columns. A new foundation will be required when the bracing is constructed alongside of the existing RC frame.

4.6.2.4 Detailing and construction considerations

Construction of steel bracings in an existing RC frame structure may be a challenge, since it requires a relatively advanced level of construction skills related to welding and installation of chemical anchors. Brace assemblages usually cannot be prefabricated, and most of the welding needs to be done in the field. The quality of welding is critical – poorly welded connections can become weak links of the retrofit solution.

Connections between the new steel bracings and the existing RC frame members are usually achieved through chemical anchors. *Figure 4-15* shows brace connections to the existing RC columns and beams for an "infill" configuration (see bracing elevation in *Figure 4-12*).

Steel bracings are often enclosed by a rim which consists of horizontal and vertical steel members (see Figure 4-14b). This bracing configuration may be constructed alongside of the existing RC frame. Horizontal steel members are usually connected to the existing RC beams using chemical anchors (see Figure 4-16a). Vertical steel members can be also connected to the existing RC columns using chemical anchors, as shown in Figure 4-16b).

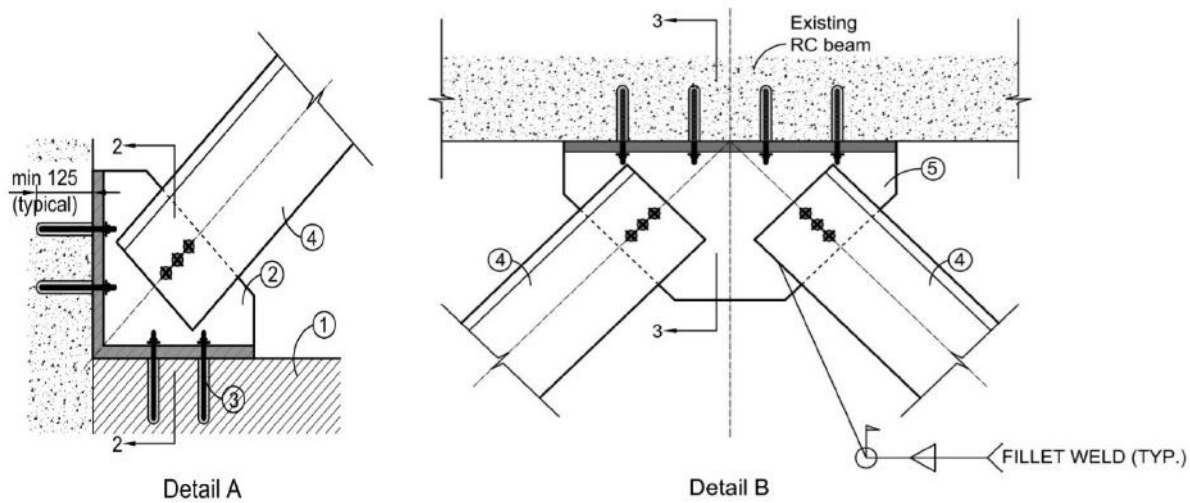

Figure 4-15. Braced frame connections for "infilled" bracing configuration (inverted-V bracing): a) brace connection to the existing column and b) brace connection to the existing beam/slab: 1-new RC tie-beam; 2 – new steel gusset plate for the brace-to-column connection; 3 – steel anchors for brace-to-concrete connections (various locations); 4 – new double-angle steel braces; 5 – new steel gusset plate for the brace-to-beam connection.

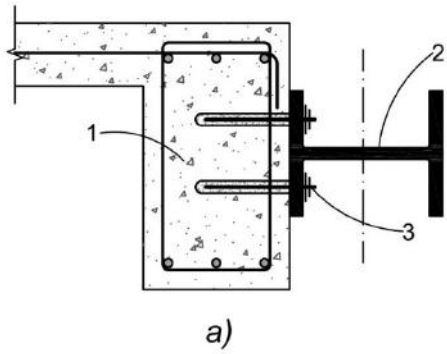

a)

1- Existing RC beam
2- Horizontal member of the braced frame
3- Steel anchors drilled into the beam

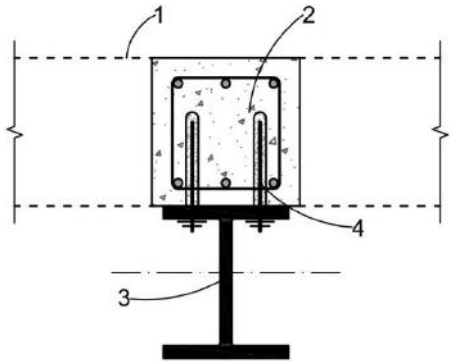

b)

1- Existing RC beam (above and below)
2- Existing RC column
3- Braced frame column
4- Steel anchors drilled into the column

Figure 4-16. Connections of a steel braced frame constructed alongside of the existing RC frame: a) connection between the horizontal member and the existing RC beam and b) connection between the vertical member and the existing RC column (based on FEMA 547, 2006).

4.6.2.5 Design applications and performance in past earthquakes

Addition of steel bracing in RC structures was used in pre- and post-earthquake retrofit projects. A school building in Sendai, Japan damaged in the 1978 Miyagi-Ken-Oki earthquake was retrofitted by constructing an exterior steel braced frame (Badoux and Jirsa, 1990). Several other buildings were also retrofitted after the same earthquake, as reported by Sugano (1981). A series of buildings retrofitted with steel bracing withstood the 1985 Michoacán earthquake in Mexico (magnitude 8.0) without structural damage (Foutch et al., 1989), see *Figure 4-17*. A 12-story RC frame building in Mexico City was retrofitted in 1980 by constructing steel braced frame at the perimeter. The foundations of the perimeter frames were strengthened with steel piles. Unlike many surrounding buildings, the retrofitted building performed well in the 1985 earthquake. A hospital in Mexico City was retrofitted with steel bracings after the 1985 earthquake. Prefabricated steel bracing assemblages were installed at the building perimeter (Badoux and Jirsa, 1990).

Figure 4-17. Retrofitting of RC buildings with steel bracings after the 1985 Mexico City earthquake (Photos: Jirsa, 2010).

4.6.2.6 Design codes and guidelines

Addition of steel bracings has been addressed by the following codes in the KR: СНиП КР 31-01-99, СП 63.13330-2012, and СНиП II-А.12-69*, and a guideline from the Russian Federation (Харьковский Промстройниипроект, НИИЖБ, 1992).

This retrofitting technique has been discussed in several international codes and guidelines, including UNIDO (1983), JBDPA (2001), FEMA 547 (2006), and FIB (2003).

4.7 *Seismic Retrofitting Techniques for Reinforced Concrete Buildings*

4.7.1 Background

Seismic retrofitting of RC buildings has been practiced for more than 50 years in some countries. For example, initial applications of seismic retrofitting RC buildings were reported in the 1960s (Sugano, 1981). Retrofitting of RC buildings has been performed either for mitigating the effects of damaging earthquakes or as a part of post-earthquake rehabilitation. The choice of appropriate technique(s) for a specific building depends on the retrofit objectives. For example, a retrofit technique can be employed to increase the resistance and/or stiffness and/or ductility of the exiting RC building. In this section, the focus is on retrofitting techniques suitable for RC frame building typologies of school buildings in the KR (see Section 3.6). It is acknowledged that other RC school building typologies, such as large panel buildings and others, may require different retrofit techniques.

This section presents retrofit techniques which have been practiced in several countries, have been evaluated through research studies, and are deemed feasible for application in the KR, considering construction- and cost-related constraints. Retrofitting techniques included in this section include RC jacketing (Section 4.7.2), steel jacketing (Section 4.7.3), and FRP jacketing (Section 4.7.4).

Key international resources (guidelines and reports) for this section include FEMA 547 (2006), FIB Bulletin No. 24 (2003), JBDPA (2001), UNIDO (1983), and Fardis (2009). A comparison of seismic retrofitting techniques for RC buildings was presented by several authors, including Sugano (1981) and Thermou and Elnashai (2006).

Whenever possible, references have been made to resources from the KR (КНИИПС, 1996) and the former Soviet Union (Харьковский Промстройниипроект, НИИЖБ, 1992; Госстрой, 1987; ЦНИИСК им. Кучеренко, 1984).

Seismic retrofitting of RC buildings has been addressed by design codes in several countries, including Japan (JBDPA, 2001) and USA (ASCE/SEI, 2014). Majority of European countries use Eurocode 8, which contains provisions for seismic retrofitting of existing RC buildings (EN 1998-3:2005).

A discussion on various seismic retrofit techniques is presented in the following sections. A case study illustrating application of these retrofit techniques on a RC school building in the KR is presented in Chapter 5. Note that the research basis related to these techniques has been presented in Appendix A.

4.7.2 RC Jacketing of existing RC beams and columns

4.7.2.1 Seismic deficiencies addressed by this retrofit technique

Jacketing can be used to mitigate the following seismic deficiencies in RC frame buildings:

- Inadequate capacity (shear/flexural/axial),
- Inadequate confinement (e.g. widely spaced transverse reinforcement), and/or
- Inadequate reinforcement detailing (e.g. insufficient length of lap splices).

An RC jacket can have multiple simultaneous effects, such as enhancement of stiffness, shear capacity, flexural capacity, ductility, and continuity of reinforcement within anchorage or lap splice zone.

Enhancement of stiffness and flexural resistance can be achieved by i) increasing cross-sectional dimensions of a column or a beam, and ii) by adding longitudinal reinforcement which can extend into the beam-column joint regions.

Enhanced confinement and shear resistance can be achieved by providing new transverse reinforcement within the jacketed region.

4.7.2.2 Description

RC jacketing is typically used for retrofitting the existing RC frame structures, and it can be applied to columns, beams, and/or beam-column joints. RC jacketing consists of constructing a jacket that encloses an existing RC member. The jacket consists of longitudinal and transverse reinforcement embedded in cast-in-place concrete or shotcrete “skin”.

One of the critical aspects of RC jacketing is to ensure continuity of longitudinal reinforcement through the beam-column joint. It is necessary to ensure the continuity of reinforcement through beam-column joints when the purpose of jacketing is to enhance flexural resistance of an RC column. However, when the purpose of jacketing is to enhance axial and shear resistance of an RC column, there is no need to maintain continuity of longitudinal reinforcement through the beam-column joint. Different jacketing configurations for RC columns are presented in Figure 4-18. RC column sections showing different reinforcement arrangements in RC jackets are shown in Figure 4-19.

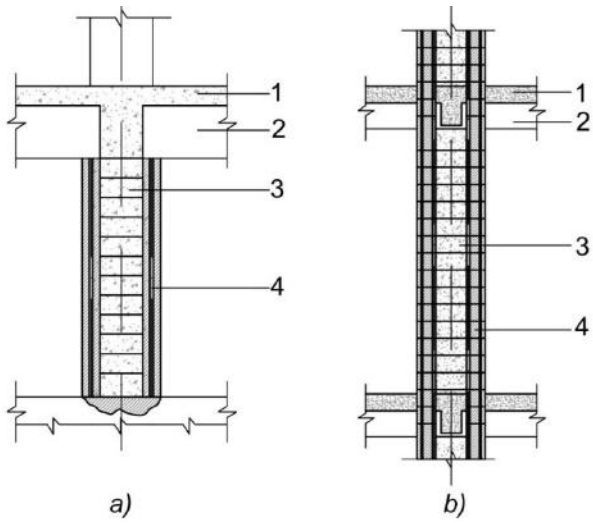

Figure 4-18. Types of RC column jackets: a) story level (discontinuous) jackets for enhancing the shear resistance, axial resistance and confinement, and b) continuous jacketing for enhancing the flexural resistance: 1- existing RC slab; 2- existing RC beam; 3- existing RC column; 4- new RC jacket (based on UNIDO, 1983).

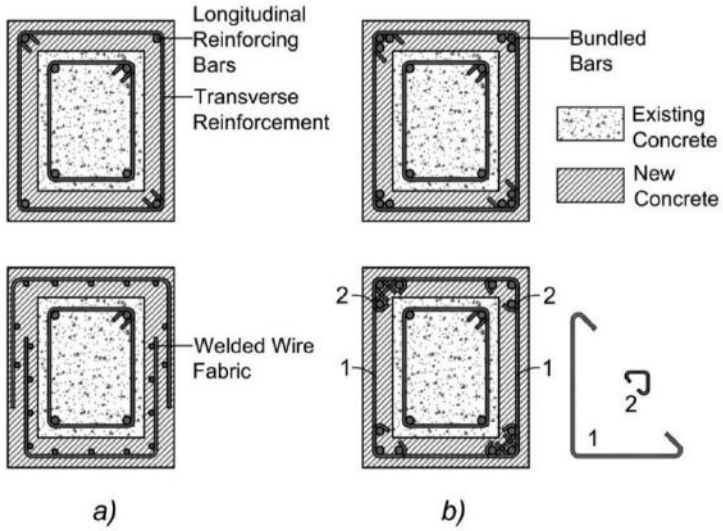

Figure 4-19. Cross-section and reinforcement for RC column jackets: a) jackets for enhancing axial and shear resistance and b) jackets for enhancing flexural resistance.

Beam jacketing can be applied i) partially, i.e. within localized areas, e.g. at beam ends (Figure 4-20a), or ii) in the form of a continuous jacket (along the entire beam length), as shown in Figure 4-20b). Partial jacketing may be used for retrofitting plastic hinge regions of the beam in order to enhance ductility. Continuous jacketing may be needed when flexural resistance of the beam is deficient and needs to be enhanced.

When the beam jacketing is constructed on 4 sides, it is necessary to provide new transverse reinforcement. This requires drilling through the floor slab and/or removing sections of the slab above the beam. A beam section retrofitted by RC jacketing is shown in Figure 4-21.

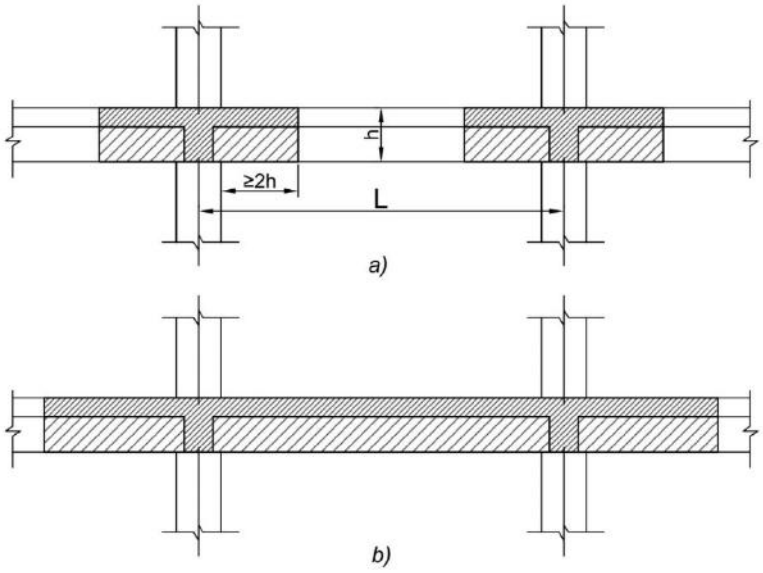

Figure 4-20. Different configurations of RC beam jackets: a) partial jacketing and b) continuous jacketing.

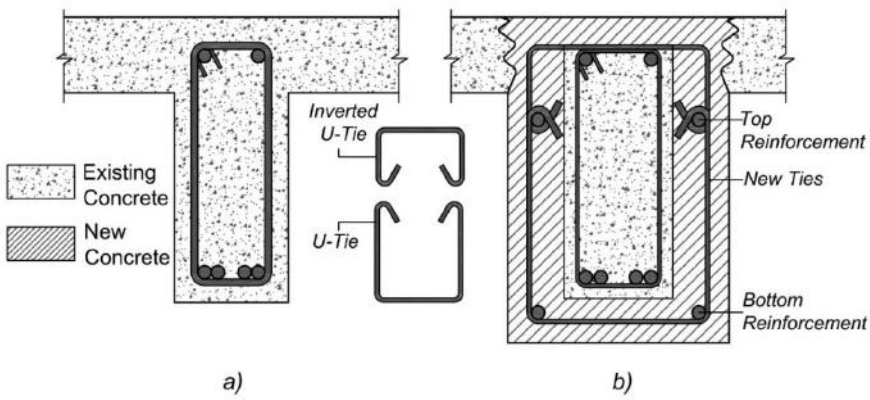

Figure 4-21. Cross-section and reinforcement for a RC beam with an RC jacket: a) existing beam section and b) retrofitted beam section (based on Alcocer, 1993).

4.7.2.3 Analysis and design considerations

Seismic analysis of RC buildings retrofitted with RC jacketing should be performed in the same manner as the analysis of existing buildings. The numerical model should be modified to take into account increased member sizes for the jacketed portions of structural members.

It should be noted that a retrofitted frame will have increased stiffness due to the jacketing of beams and columns, and it should be considered when seismic forces are determined for the retrofitted structure. Due to stiffness increase in the retrofitted structure, fundamental period will decrease, and consequently the seismic forces (seismic demand) may increase.

Design considerations depend on seismic deficiencies of the existing structure and the goals of the seismic retrofit. There are several scenarios:

1. Increase shear resistance of the existing RC columns and beams – this can be achieved when shear resistance of the jacketed RC member is higher than the original member by the required safety margin (based on the results of seismic analysis).
2. Increase the flexural resistance of existing RC columns and beams – this can be achieved when flexural resistance of the jacketed RC member is higher than the existing RC member by the required safety margin (based on the results of seismic analysis).
3. Increase the ductility of the existing frame by achieving a ductile “strong column-weak beam” failure mechanism. That can be accomplished when plastic hinge regions in beams and columns are retrofitted by means of RC jackets. These regions are located at the column ends (top/bottom) at each floor level, and also at the beam ends (close to the beam-column joints). Retrofitted RC frames need to meet the criteria for ductile seismic behavior set by СП 63.13330.2012 (Clauses 5.1.2 and 7.1.8).

It is possible that an RC jacket may need to be extended from the column downwards into the foundation. This is required when flexural capacity of the column at the ground floor level has increased due to the jacketing.

Material requirements for RC jackets in RC frame structures are summarized below:

1. Minimum steel grade for bars should not be less than class A240, A300 (yield strength 295 MPa), A400C, A500C (yield strength 235 MPa), and for wire mesh A240 and Bp-I (yield strength 235 MPa).
2. Concrete used for an RC jacket should have compressive strength not less than the existing RC member, and its compressive strength should not be higher by more than 5 MPa than the existing member.

Minimum jacket thickness should be 40 mm for either cast-in-place concrete or shotcrete.

The design of jacketed beam/column sections should be performed using the same approach as structural design of existing RC columns and beams (according to СП 63.13330.2012).

The following assumptions need to be taken for the design of RC members retrofitted with RC jackets (FIB, 2003):

1. The jacketed RC member can be considered as monolithic, provided that interface between the existing and the new concrete has been roughened (the surface preparation has been done).
2. Full axial load can be considered to act on the retrofitted RC member.
3. Concrete strength for the retrofitted section can be taken the same as the jacket.
4. In determining the flexural resistance of the jacketed column longitudinal reinforcement of both the jacket and the existing column section should be taken into account.
5. Only transverse reinforcement of the jacket should be taken into account for confinement and shear resistance of the jacketed RC member.
6. When RC jacketing is performed to enhance ductility of the existing RC frame, the design should ensure that the shear resistance of retrofitted section is higher than the shear force corresponding to the bending capacity of the same section. This is intended to ensure a ductile flexural behavior, and is in line with the Capacity Design approach.

4.7.2.4 Detailing and construction considerations

The surface of an existing RC member should be roughened by sandblasting or chipping by hand up to 6 mm amplitude. The surface should be cleaned of all loose material, dust, and grease. The surface must be wetted (moistened) before the new concrete is placed. A few additional construction-related recommendations regarding RC jacketing of existing RC beams and columns are summarized below.

<u>Column jacketing</u>

1. All exposed vertical surfaces of the existing column should be enclosed by an RC jacket. Ideally, RC jacketing shall be applied on all 4 column sides (surfaces), however that may not be always be possible. In some cases, jacketing needs to be applied on 2 or 3 sides (surfaces).
2. Transverse reinforcement in RC jackets can be in the form of welded wire mesh or reinforcing bars.
   2.1. When welded wire mesh is used, it should be lapped over sufficient length. Minimum size of welded wire mesh is 6 mm diameter wire at 50 mm spacing.
   2.2. When reinforcing bars are used to form ties, the minimum bar diameter should be 8 mm and the spacing should not exceed 150 mm. The ties need to be L-shaped and arranged to provide a 135-degree hooked anchorage. Alternatively, the ties can be joined by welding.
3. Longitudinal reinforcement should be in the form of bars placed at the column corners. At least one bar should be placed at each corner. The minimum bar diameter is 16 mm. A maximum of 3 bundled bars can be provided at each corner. The area of longitudinal reinforcement should ideally not be less than 1% of the gross cross-section of the jacketed member.
4. a) When retrofitting aims to enhance flexural resistance of an existing column, longitudinal reinforcement must be continuous through the floor. Holes should be filled with cement grout (microconcrete). Lap splices for the longitudinal reinforcement should be placed at the story midheight, see Figure 4-18b.
   b) When retrofitting aims to enhance shear and axial resistance of an existing column, a 30 to 50 mm gap can be placed at the column ends at each floor level (longitudinal reinforcement does not need to be continuous), see Figure 4-18a.

Beam jacketing

1. Ideally, all exposed beam sides (surfaces) should be enclosed by a RC jacket. However, that may not be possible, hence in some cases the jacketing can be applied to 3 sides (2 vertical sides and the bottom).
2. To place and consolidate new concrete in the beam (in case of cast-in-place construction), it is required to perforate a slab along the beam edge in an alternate pattern using an electric jackhammer.
3. Transverse reinforcement should be in the form of two U-shaped ties. A transverse groove needs to be cut in the beam top cover to insert the inverted U-shaped ties.
4. Bottom longitudinal reinforcing bars in beam-column joint region are placed through the holes in the column (beam reinforcement must pass through the column).
5. Top longitudinal reinforcing bars in the beam should be placed in position and U-shaped ties are lowered to the final position and secured.
6. Finally, bottom longitudinal bars should be placed and secured in the position.

Note that electric or pneumatic tools should be used for drilling holes, without creating dynamic loads, in accordance with the requirements of СНиП KR 12-01-99.

It should be noted that the beam jacketing requires significant effort and is more disruptive than column jacketing. According to research studies, beam jacketing requires 9 times longer time for surface preparation and slab perforations than column jacketing (Alcocer, 1993).

Shotcrete is the preferred concrete technology since there is no need to use formwork and the construction is faster than in case of cast-in-place concrete. However, in shotcrete applications there is a potential for the material build-up behind the reinforcing bars. Shotcrete application must be performed by skilled construction workers (additional training may be needed for shotcrete application).

4.7.2.5 Design applications and performance in past earthquakes

RC jacketing is one of the most widely used techniques for seismic retrofitting of existing RC buildings before and after earthquakes. This technique was initially used in Japan after the 1968 Tokachi-oki and the 1978 Miyagiken-oki earthquakes (Sugano, 1981), and in the Balkan region since the damaging earthquakes which affected the region in the 1970s (UNIDO, 1983).

This technique was also used for retrofitting RC buildings damaged in the 1985 Mexico City earthquake (Aguilar et al., 1989), see Figure 4-22. Case studies of retrofitted buildings were presented by Jara et al. (1989). RC jacketing was used for retrofitting RC buildings damaged in the 2001 Bhuj, Gujarat earthquake in India (GREAT, 2001), as shown in Figure 4-23. An application of RC jacketing for the retrofitting of RC buildings in Colombia was described by Mejia (2002) (Figure 4-24).

4.7.2.6 Design codes and guidelines

RC jacketing has been addressed by the following codes in the KR: СП 63.13330-2012, СНиП II-A.12-69*, and guidelines from the KR (КНИИПС, 1996) and the Russian Federation (Харьковский Промстройниипроект, НИИЖБ, 1992).

RC jacketing has been addressed by several international guidelines (UNIDO, 1983; FEMA 547, 2006; FIB 2003; Chakrabarti, Menon, and Sengupta, 2008) and by design codes in several countries, including Japan (JBDPA, 2001) and India (BIS, 2013).

Figure 4-22. Beam and column jacketing of RC buildings in Mexico City after the 1985 earthquake (Photos: Jirsa, 2010).

Figure 4-23. RC jacketing of an existing RC column after the 2001 Bhuj, India earthquake (Photo: Jain et al., 2002).

Figure 4-24. RC jacketing of an existing RC column in Colombia (Photos: Mejia, 2002).

4.7.3 Steel jacketing of RC frame members

Jacketing of RC columns can be performed by steel jacketing which consists of vertical steel angle sections provided at the column corners and transverse steel straps (or bars) welded to the steel sections. This method can be effective only when the gaps and voids between the new steel members and the existing concrete are filled with non-shrink cement- or epoxy-based grout. This technique can be used to enhance confinement and shear resistance of existing RC columns. Flexural resistance of an RC column can be enhanced using this technique only when the steel angle sections are continuous through the floor slab. However, this may not be effective after the column is subjected to several cycles of earthquake shaking (FIB, 2003). Steel jacketing technique has been recommended by various guidelines, e.g. UNIDO (1983); Госстрой (1987); КНИИПС (1996); BIS (2013), and it has been used on some retrofit projects in the KR. An advantage of steel jacketing is that it causes less disruption during the construction, and the construction is faster compared to RC jacketing. However, it is difficult to ensure the quality of construction, especially the quality of field welding and grouting. Also, steel sections are prone to corrosion, hence a periodic maintenance is required after the construction is completed. It is expected that steel jacketing is more expensive than RC jacketing (FIB, 2003).

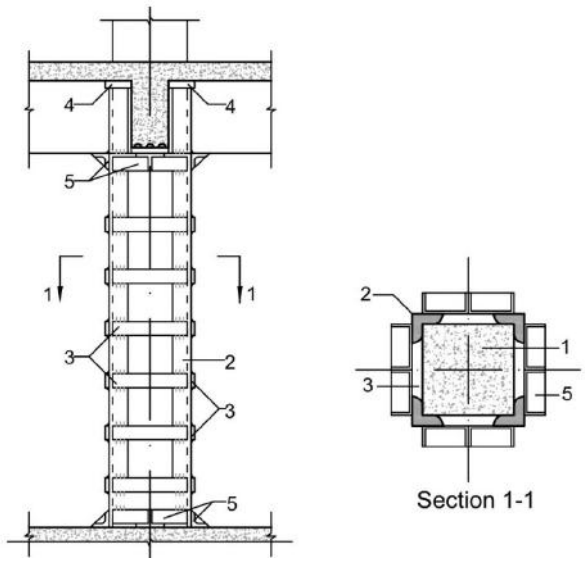

Figure 4-25. Steel jacketing of a RC column (1- existing column; 2- steel angle section; 3- steel strap; 4 – supporting plate; 5- top/bottom stiffeners) (UNIDO, 1983).

Steel jacketing was used to retrofit damaged RC buildings after the 2001 Bhuj, India earthquake (Jain et al., 2002). The jacketing was done using 75 mm steel angles at corners and 25 mm wide steel straps (*Figure 4-26*). The jacketing was implemented at the ground floor level, and steel angles were usually not extended into the foundation.

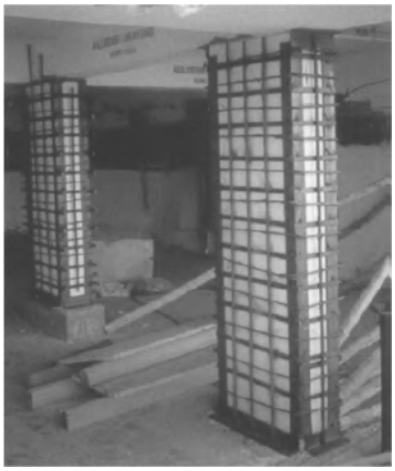

Figure 4-26. Jacketing of RC columns with steel angle sections and steel straps after the 2001 Bhuj, India earthquake (Photo: Jain et al., 2002).

4.7.4 Jacketing using Fiber Reinforced Polymer (FRP) overlays

This retrofitting technique involves the use of Fiber Reinforced Polymer (FRP) overlays (wraps) for enclosing RC beams and columns. FRP overlays act in similar manner like RC jacketing, and are suitable for application to existing RC columns with deficient shear capacity and/or inadequate confinement provided by transverse reinforcement (ties). FRP overlays are also suitable for application to the existing RC beams with deficient shear capacity, flexural capacity, and/or ductility. The cost is expected to be significantly higher than similar retrofit techniques.

This retrofit technique had not been used in the KR until the present time (June 2018), but it has a potential for future applications and for that reason it has been included in this Manual.

Over the last 30 years, FRP materials have been extensively used both for structural rehabilitation (strengthening) and also for seismic retrofitting of RC and masonry structures. Advantages of FRPs include ease and speed of application, thus resulting in minimal disruption to the occupants. FRPs are corrosion-resistant and have high strength-to-weight ratio. These materials are light-weight and hence do not add weight to the existing structure.

FRP materials in the form of overlays (wraps) can be applied externally to RC and masonry structures. FRPs are available in the form of continuous fibers made of carbon (CFRP), glass (GFRP), or aramid (AFRP), which are bonded together in a matrix made of epoxy, vinylester or polyester resin. The most commonly used FRPs are GFRPs and CFRPs, but GFRPs are significantly less expensive than CFRPs. Mechanical properties of FRPs are very different from steel, which has been traditionally used to provide tensile resistance as reinforcement in RC structures (FIB, 2001). *Figure 4-27* shows a comparison of tension stress-strain diagrams for fibers used for various FRPs and steel. It can be seen that some FRPs (e.g. CFRPs) have modulus of elasticity which is similar to or higher than steel (215-700 GPa), while GFRPs have smaller modulus of elasticity (around 70 – 90 GPa).(Modulus of elasticity for steel is around 200 GPa.) It should be also noted that FRPs have significantly higher ultimate tensile strength (f_u) than steel. The CFRPs have the highest tensile strength of all FRPs (in the range from 2100 to 4800 MPa). The ultimate tensile strain (ε_u) for FRPs, also known as rupture strain, is variable, but it is lowest for CFRP (from 0.2 to 2.0%), while for GFRP it is in the range from 3.0 to 5.5%. It is important to note that FRP materials act only in tension – they are not able to resist compression. For that reason, it is important to ensure that fibers are aligned in the direction in which they are subjected to tension. Note that mechanical properties of FRPs can vary depending on the manufacturer.

Design of FRP overlays needs to take into account that FRPs behave in linear-elastic manner up to the failure. A sudden rupture will occur once the ultimate tensile strain (ε_u) has been reached. This behavior is different from steel, which is characterized by yielding and plastic deformations. The design procedures for structures with externally applied FRP overlays are similar to the design of RC structures in elastic stage of behavior, before the steel yielding takes place.

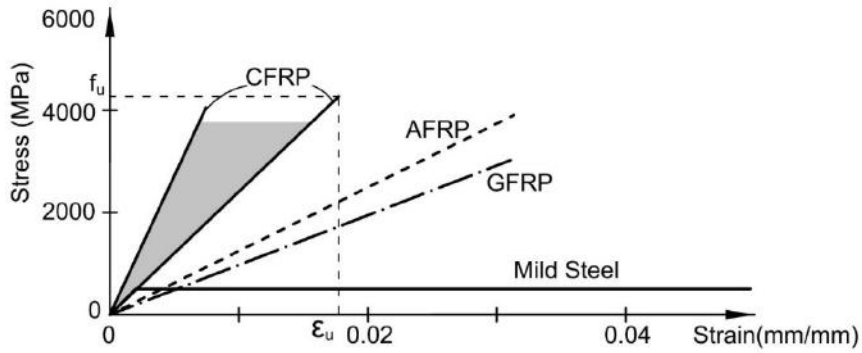

Figure 4-27. Uniaxial tension stress-strain diagram for various fibers used for the FRPs and steel: CFRP= carbon FRP; AFRP= aramid FRP; GFRP= glass FRP (based on Triantafillou, 2006).

FRP overlays can be provided at the column ends (at each floor level) when the retrofit aims to enhance confinement, or over the entire height when shear capacity needs to be enhanced. When FRP wraps are applied at the column ends, it is usually required to ensure that the height of wrapped zone at each column end is at least equal to 1.5 times the larger cross-sectional dimension of the column.

Since RC columns in older buildings are characterized by more than one seismic deficiency, it is usually required to apply FRP overlay over the entire column height. A nominal gap may be provided at the top and bottom of a column. *Figure 4-28* illustrates possible applications of FRP wraps for retrofitting RC columns. Note that a gap is usually provided between the top of the wrap and the floor slab (above or below). For most applications it is not required to ensure the continuity of column wrap through the floor beam or slab.

It is critical to ensure that RC columns are continuously wrapped at least twice around the perimeter. For the beam and column applications the first layer should be considered ineffective due to the possibility of abrasion and other factors. The overall thickness of the wrap (number of layers) needs to be determined by design for each application. *Figure 4-29* shows cross-sections of RC columns with externally applied FRP wraps. It can be seen that a lap needs to be provided. To ensure the effectiveness of wrapping, the corners of square or rectangular RC columns need to be rounded to an approximately 20 mm radius.

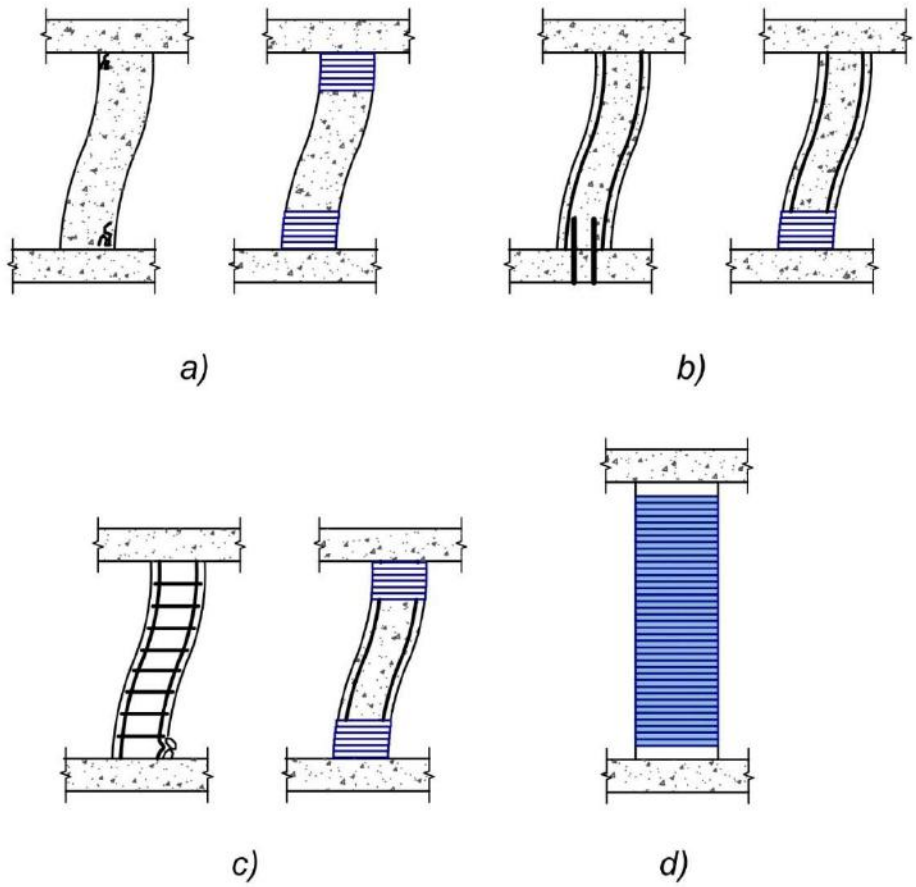

Figure 4-28. Retrofitting of RC columns using FRP overlays: a) confinement to increase lateral deformation capacity; b) confinement to prevent lap splice failure; c) confinement to prevent reinforcement buckling, and d) wrapping to increase shear capacity (Triantafillou, 2006).

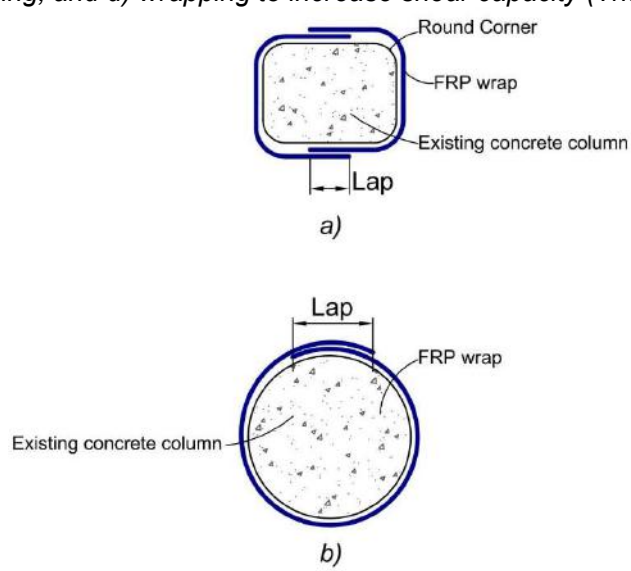

Figure 4-29. Seismic retrofit of RC columns using FRP overlays: a) rectangular section and b) circular section (FEMA 547, 2006).

FRP wraps are more effective for applications to circular- than rectangular-shaped columns. In circular sections, the passive radial pressure due to lateral dilation caused by the wrap provides confinement by placing section in triaxial state of stress (*Figure 4-30*a). However, in columns with rectangular or square cross-sections lateral dilation is only present at the corners, thus concrete needs to form an arch spanning between the corners to achieve the confinement (*Figure 4-30*b). This results in a reduced concrete core size. It is recommended to use FRP wraps for rectangular columns with the depth/width aspect ratio of maximum 1.5.

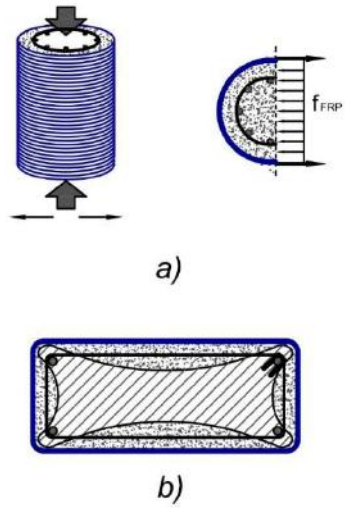

Figure 4-30. FRP-induced confinement in RC columns: a) circular column and b) rectangular column (ISIS, 2004).

FRP overlays can be also used to retrofit existing RC beams, but this application is somewhat different from the columns. When the goal of the retrofit is to enhance the beam shear capacity, retrofit can be applied in the form of U-shaped strips on 3 sides of the beam (so drilling through the slab is not required). However, when the goal is to increase ductility in the beam's plastic hinge zone, it is required to wrap all 4 sides of the section. Alternatively, special FRP anchors (usually proprietary products) can be used at the web-to-flange interface of the beam. *Figure 4-31* illustrates application of FRPs for retrofitting of existing RC beams.

The construction quality assurance is critical for verifying that the retrofit was done in accordance with the manufacturer's specifications. The construction labor needs to be trained (certified) to perform the retrofitting using this technique.

There are several design guidelines for RC structures retrofitted with externally bonded FRP overlays, including ICC (2017), INRC (2014), ACI (2008), and ISIS (2008). A standard for design of structures with FRPs and a specification for FRP materials are available in Canada (CAN/CSA 2012; 2014).

An example of retrofitting a RC column using GFRP wrap is shown in *Figure 4-32*.

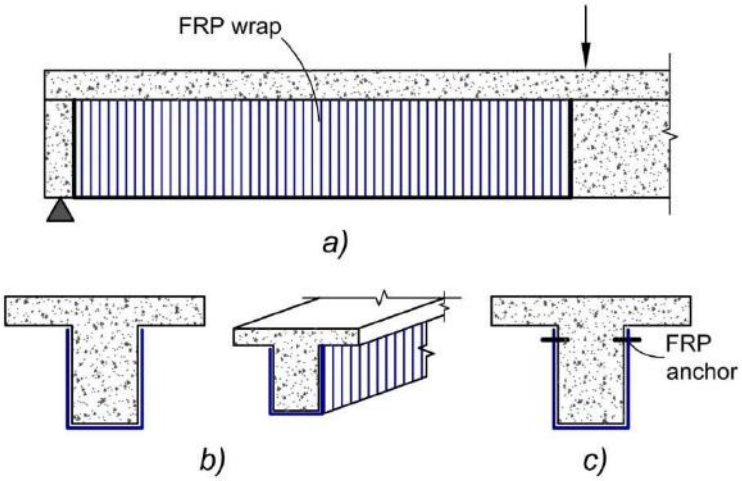

Figure 4-31. Seismic retrofitting of beams using FRP overlays (based on Triantafillou, 2006): a) beam elevation showing a region covered by the FRP wrap; b) beam cross-section showing 3-sided wrapping, and c) FRP anchors facilitate the anchorage and eliminate the need for drilling through the slab.

Figure 4-32. Jacketing of RC columns using FRP wraps: field application of a GFRP wrap[1].

4.8 *Seismic Retrofitting Techniques for Masonry Buildings*

4.8.1 Background

Seismic retrofitting has been implemented on thousands of masonry buildings around the globe, either to mitigate the effects of damaging earthquakes or as a part of post-earthquake rehabilitation process. There are numerous seismic retrofitting techniques, but the focus of this section is on the techniques which are feasible for seismic retrofitting of masonry school buildings in the KR (see Section 3.5). The main seismic deficiencies in these buildings are related to the in-plane lateral capacity of masonry walls, hence appropriate retrofitting techniques are related to mitigating those deficiencies. Due to the presence of RC slabs, wall-to-floor connections, and significant wall thickness, retrofitting for the out-of-plane seismic effects is not critical for these building typologies. However, it should be acknowledged that other masonry school building typologies may require different seismic retrofit techniques.

[1] http://concretesolutions.co.nz/all-services/commercial/frp-composite-strengthening/

This section presents retrofit techniques which have been implemented in countries with similar construction practices and labor skills like the KR and have been tested through experimental studies. These techniques are considered to be feasible for application in the KR, considering construction- and cost-related constraints. Retrofitting techniques included in this section are RC jacketing/reinforced plaster (Section 4.8.2) and the use of FRP overlays and strips (Section 4.8.3).

Key international resources related to this subject include FEMA 547 (FEMA, 2006), FEMA 306 (1999), FEMA 308 (1999a), UNIDO (1983), NIST (1997), and Tomaževič (1999). Comparisons of seismic retrofitting techniques for masonry buildings have been presented by Karantoni and Fardis (1992); ElGawady, Lestuzzi and Badoux (2004); and Amiraslanzadeh et al. (2012).

There are a few resources from the KR, e.g. КНИИПС (1996) and the former Soviet Union, e.g. Госстрой (1987) and ЦНИИСК им. Кучеренко (1974; 1984).

Seismic retrofitting of masonry buildings has been addressed by design codes in several countries, for example the USA (ASCE/SEI 41-13). Majority of European countries use Eurocode 8, which also contains provisions for seismic retrofitting of existing masonry buildings (EN 1998-3:2005).

A discussion on various seismic retrofit techniques is presented in the following sections. Note that the research basis related to these techniques has been presented in Appendix A.

4.8.2 Use of RC jacketing/reinforced plaster for seismic retrofitting of masonry walls

4.8.2.1 Seismic deficiencies addressed by this retrofit technique

RC jacketing can be used to enhance the in-plane shear and bending capacity of masonry walls, but it can be also used to enhance their out-of-plane bending capacity. RC jacketing is also effective in increasing the stiffness of existing walls.

4.8.2.2 Description

RC jacketing technique consists of double-sided RC jackets attached to masonry walls (exterior and interior wall surface), as shown in *Figure 4-33*. An RC jacket is attached to an existing masonry wall using chemical anchors. Either cast-in-place concrete or shotcrete are used for this application. This retrofit technique is also referred to as “RC overlay” or “shotcrete overlay” (when shotcrete is used). A case study illustrating an application of this retrofit technique on a masonry school building in the KR is presented in Chapter 6.

Retrofit of the existing wall foundations is usually required in combination with the RC jacketing of walls. Concrete needs to be applied in two layers with steel reinforcing mesh in between. The meshes on both exterior and interior wall surfaces are inter-connected by means of steel anchors.

One of the critical aspects of RC jacketing is to ensure continuity of vertical reinforcement through the floor slab.

RC jacketing is usually implemented using cast-in-situ concrete or shotcrete with the minimum jacket thickness of 100 mm. This technique can be also implemented using a much thinner cement mortar overlay with the minimum thickness of 13 mm (1/2 inch); that technique is referred to as “reinforced plaster” (RP) (NIST, 1997). In some cases, glass or steel fibers are added to increase the plaster strength (Hutchison, Yong, and McKenzie, 1984). Alternatively,

fiberglass mesh, which is used for plastering walls in non-seismic applications, can be used instead of steel mesh. The RP technique was used for retrofitting a school building in Portugal, as discussed later in this section (Proença et al., 2012).

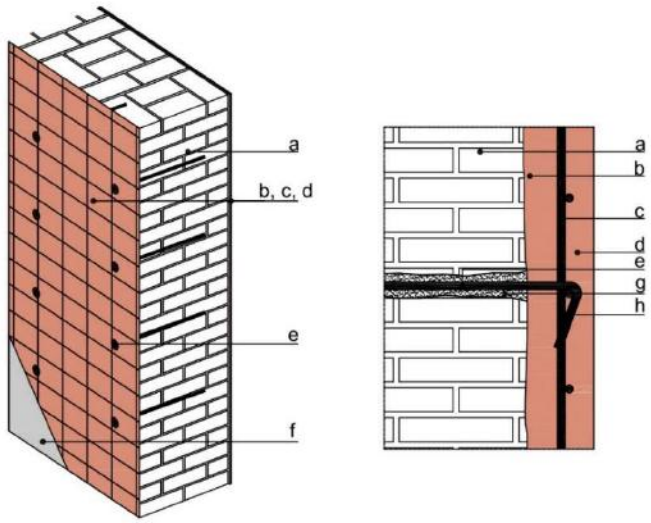

Figure 4-33. RC jacketing of an existing masonry wall: a) existing masonry; b) first layer of concrete; c) steel wire mesh; d) second layer of concrete; e) steel anchors; g) hole in the masonry wall filled with epoxy resin or cementitious grout, and h) steel anchor with a 90 degree hook (Source: ALL Ingegneria and AIRES Ingegneria).

4.8.2.3 Analysis and design considerations

The thickness of RC jacket is determined by design and can be in the range from 40 to 120 mm (when concrete is used). Design requirements for RC jackets are addressed in Clause 10.3.2 and Table 10.1 of СП 63.13330.2012. The minimum thickness of RC jacket should not be less than 40 and 50 mm for interior and exterior walls respectively.

Both horizontal and vertical reinforcement need to be provided. The minimum grade for steel reinforcement should not be less than class A240, A300 (yield strength 295 MPa), A400C, A500C (yield strength 235 MPa), and for wire mesh A240 and Bp-I (yield strength 235 MPa).

RC jackets should be constructed using at least MI50 grade concrete (ЦНИИСК им. Кучеренко 1984). The walls need to be retrofitted using through-wall steel anchors (ЦНИИСК им. Кучеренко 1984). The spacing of anchors should not exceed twice the wall thickness. Horizontal and vertical spacing of anchors should not exceed 100 and 75 cm respectively. The anchors should be securely fastened.

RP technique can be used as an alternative to RC jacketing. The minimum plaster thickness is about 13 mm and it is reinforced with steel hardware cloth (1 mm diameter wire at 13 mm spacing). Minimum 75-100 grade cement mortar should be used for the plaster (ЦНИИСК им. Кучеренко 1984). The plaster is attached to the wall by means of steel anchors.

The analysis of a masonry wall retrofitted with RC jackets should be performed in the same manner as for the existing structure. The analysis model should be modified to take into account mechanical properties and thickness of the RC jackets.

It should be noted that the retrofitted building will be characterized by an increased stiffness due to the RC jacketing. However, a stiffness increase due to the retrofit usually does not lead to increased seismic forces because masonry buildings are inherently very stiff.

RC jacketing for masonry walls is usually designed according to the force-based design approach. The following two alternative design scenarios may be considered (FEMA 547, 2006):

1. RC jacketing resists the entire seismic force applied to the wall – this means that the existing masonry may be significantly damaged before the jacketing starts to resist seismic load, or
2. Seismic loading is shared by the jacket and the masonry wall in proportion to their relative stiffnesses. This approach requires that the capacity of both existing masonry wall and RC jacket need to be adequate to resist the total seismic load (see Section 6.5.4).

The first approach is considered reasonable for the design since the flexural and shear resistance of an RC jacket can be significantly higher than the original masonry wall. This assumption may cause cracking in the masonry wall once the reinforcement in the RC jacket starts to yield.

RC jackets usually need to be extended downwards into the foundation and the reinforcement needs to be anchored by means of chemical anchors embedded into the existing foundation. Upgrading of the existing foundation is likely required due to the increase of shear and bending capacity of the wall at the ground floor level due to the jacketing (see Section 6.5.5.2 and Figure 6-21).

4.8.2.4 Detailing and construction considerations

The construction procedure for RC jackets in masonry walls is discussed in Section 6.5.6, based on JV “ALL Ingegneria and AIRES Ingegneria” (2017a).

The construction procedure for RC jacketing is summarized below (see Figure 4-34):

1. Surface of the existing masonry wall should be prepared by removing loose plaster, dust, grease, etc. using wire brushes. The surface should be thoroughly washed with clean water before the concrete is applied.
2. Steel anchors (dowels) need to be installed to connect the existing wall to the new RC jacket. These anchors need to be provided at regular spacing, which is determined based on the design requirements, but it usually does not exceed 90 cm.
3. The first layer of concrete is placed manually or with a spraying machine to create a support for the reinforcement (detail "b" on the figure).
4. The reinforcement (e.g. welded wire mesh) is placed on top of the jacket, while the first layer of jacket is still fresh. After the mesh is placed, bend steel anchors to form 90 degree hooks.
5. The second layer of concrete is placed.

Note that electric or pneumatic tools should be used for drilling holes, without creating dynamic loads, in accordance with the requirements of СНиП KR 12-01-99.

Shotcrete is the preferred concrete technology for RC jackets in masonry walls. The use of shotcrete has a few advantages: there is no need to use formwork and the construction is faster than for the cast-in-place concrete. However, in shotcrete applications there is a potential for the material build-up behind the reinforcing bars. The amount of reinforcing steel in the wall should be kept to the minimum to facilitate the application of shotcrete (FEMA 308, 1999a) and to control cracking (Karantoni and Fardis, 1992).

Shotcrete application must be performed by skilled construction workers (additional training may be needed in some cases).

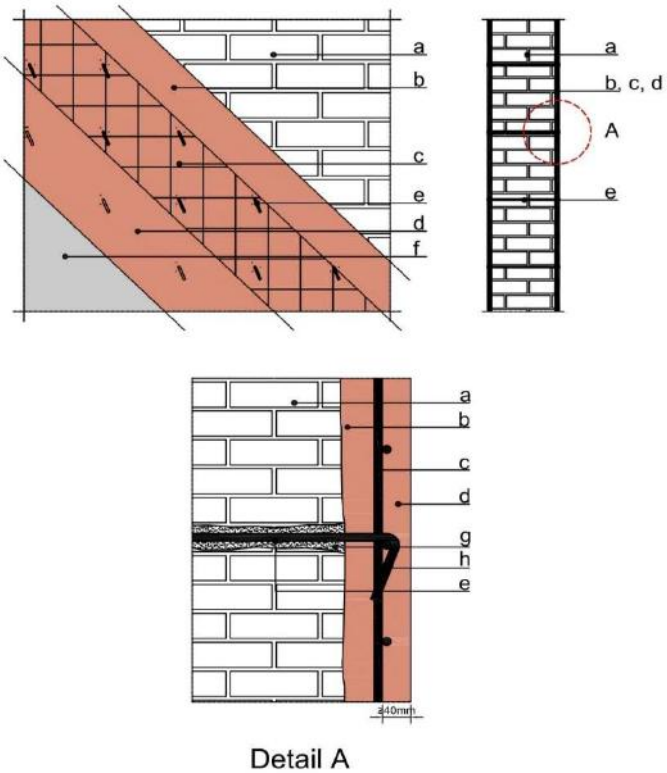

Figure 4-34. RC jacketing details: a) existing masonry wall; b) first layer of concrete jacketing; c) welded steel wire mesh; d) second layer of concrete jacketing; e) cross-connection steel anchors; f) plaster; g) hole in the masonry wall filled with epoxy resin or cement mortar grout, and h) steel anchor with a 90° degree hook (Source: ALL Ingegneria and AIRES Ingegneria).

As an alternative to chemical anchors for RC jacketing, it is possible to create shear connectors reinforced with steel bars which act like shear keys, as shown in Figure 4-35. Brick(s) need to be removed from the existing masonry wall at regular intervals and a reinforcement cage is placed in the chase or void created. Finally, concrete/shotcrete is placed within the chase. This technique is most suitable for applications with one-sided jacketing.

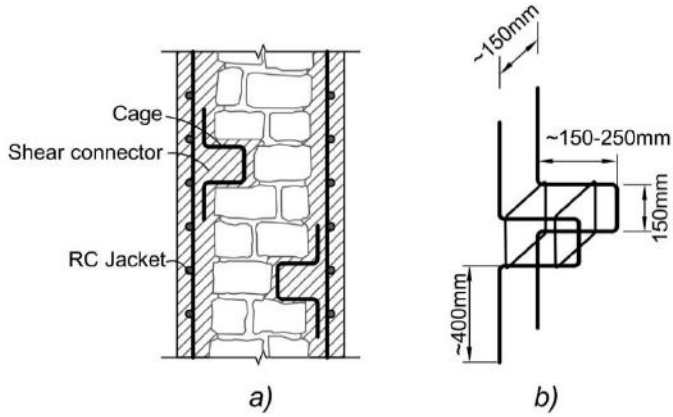

Figure 4-35. RC jacketing of masonry walls using shear connectors instead of steel anchors (based on UNIDO, 1983).

4.8.2.5 Design applications and performance in past earthquakes

RC jacketing is one of the most widely used techniques for the retrofitting of masonry buildings before and after earthquakes in many countries. This technique was used in the Balkan region after the damaging earthquakes in the 1970s and was documented by UNIDO (1983). RC jacketing was used to retrofit earthquake-damaged buildings in Italy (D'Ayala, Speranza, and D'Ercole, 2001) and Slovenia (Lutman and Tomaževič, 2003). Kehoe (1996) reported that some unreinforced masonry buildings were retrofitted using shotcrete jacketing on exterior walls before the 1994 Northridge, California earthquake. There is no specific report regarding the performance of these buildings in the earthquake. Figure 4-36 shows an application of RC jacketing in New Zealand after the 2011 earthquake (magnitude 6.2).

Figure 4-36. Shotcrete application for retrofitting masonry walls in New Zealand after the 2011 earthquake (Photo: K.J. Elwood).

RP technique was used for seismic retrofitting of a 100-year old masonry school in Portugal as an earthquake mitigation activity (Proença et al., 2012). Galvanized expanded steel mesh was used to retrofit interior walls, while fiberglass mesh was used for exterior walls (*Figure 4-37*). Application of shotcrete jacketing for retrofitting of historic masonry buildings in the USA is discussed by Snow (1999), see Figure 4-38.

a) b)

Figure 4-37. Application of reinforced cement plaster for retrofitting a school in Portugal: a) steel mesh application to an interior wall and b) fiberglass application to an exterior wall (Photos: Proença et al., 2012).

Figure 4-38. A field application of RC jacketing in an older brick masonry building in California, USA (Photo: J. Sherstobitoff).

4.8.2.6 Design codes and guidelines

RC jacketing of existing masonry walls has been addressed in the code СП 63.13330.2012 and guidelines from the former Soviet Union, e.g. ЦНИИСК им. Кучеренко (1974; 1984).

This technique has been addressed by several international guidelines (UNIDO, 1983; FEMA 547, 2006; Chakrabarti, Menon, and Sengupta, 2008).

4.8.3 Use of Fiber Reinforced Polymer (FRP) overlays and strips for seismic retrofitting of existing masonry walls

FRP overlays are an alternative to RC jacketing technique and can be used to enhance the in-plane stiffness, shear and bending capacity of unreinforced masonry walls. FRP overlays may be also effective in enhancing the out-of-plane bending capacity of unreinforced masonry walls (which is beyond the scope of this section). General properties of FRP materials for retrofitting RC and masonry structures are discussed in Section 4.7.4.

Seismic retrofitting of buildings using FRPs was not used in the KR until the present time (June 2018), but it has a potential for future applications and for that reason it has been included in this Manual.

This technique consists of applying FRP overlays or strips to wall surfaces that were previously saturated by an epoxy resin binder. FRP overlays can be applied over the entire wall surface, e.g. using GFRP fabrics (thin glass fibers woven info a fabric sheet). Alternatively, horizontal and vertical FRP strips can be connected with fiber anchors – for example, using CFRP. In both applications, fibers are used as tension reinforcement for the wall and should be aligned in the direction of tensile stresses. Possible uses of FRPs for retrofitting masonry walls are illustrated in *Figure 4-39*.

FRP overlays and strips can be used either as one-sided or two-sided applications, i.e. they can be applied to one or both wall surfaces. They should be wrapped around the wall ends to ensure adequate bond to the wall surface and anchorage. Alternatively, fiber anchors can be installed along the wall perimeter (see Figure 4-39a).

For most applications where FRPs are used to enhance the in-plane wall capacity it is not required to ensure continuity of the FRP overlay vertically through the floor beams or slabs (which would be difficult to achieve with this technique). Also, a FRP overlay cannot be bent at 90 degrees, for example, it is required to have a radius/bent when the FRP overlay extends

from the wall to underside of the floor slab (see Figure 4-40a). Special details may need to be developed when load transfer is needed from floor/roof diaphragm into the wall.

FRP overlay must be adequately anchored at the base of the wall. This could be done using steel angles or fiber anchors (these are usually proprietary products available from FRP manufacturers). Retrofitting of the existing wall foundations may be required in some cases, in order to account for increased shear forces and bending moments resulting from the retrofit.

The shear resistance contribution from the FRPs can be determined in a similar manner to that used to determine the required amount of wall reinforcement. The required effective fiber area per unit width (corresponding to the thickness) and its contribution to shear resistance are governed by the bond and anchorage strength at the FRP-to-wall interface.

FRP overlays or strips are commonly used to enhance the shear capacity of existing masonry walls. The equations for estimating the shear capacity of a FRP overlay are proposed by ICC (2017) and INRC (2014). ElGawady, Lestuzzi, and Badoux (2006) proposed an analytical model for estimating the shear capacity of masonry walls retrofitted with FRPs based on the experimental data.

Several design guidelines for retrofitting masonry structures using FRP overlays are available, including ICC (2017) and INRC (2014). Also, some publications related to RC structures are also relevant, e.g. ACI (2008). A design standard for structures reinforced with FRPs and a specification for FRP materials are available in Canada (CAN/CSA 2012; 2014).

Installation of FRP overlays and strips can be performed faster than other retrofitting techniques, but it needs to be done carefully, and qualified construction labor needs to be engaged. A general construction procedure is summarized below (based on FEMA 308, 1999a and FEMA 547, 2006), and the procedure is illustrated in Figure 4-40:

1. Wall surface must be cleaned using a wire brush, that is, any loose paint, plaster, dirt, etc. must be removed. Loose masonry needs to be reset and deteriorated or cracked mortar joints repointed.
2. A thin epoxy resin coat needs to be applied to the surface using rollers. The FRP fabric or strips are saturated in epoxy and are pressed into the epoxy resin binder with a roller. The number of layers and their orientation depend on the design requirements. Additional epoxy resin may be applied to fully coat the fibers. The fabric should be either wrapped around the wall edges (Figure 4-40b), or fiber anchors should be installed along the wall perimeter (Figure 4-40c).
3. The epoxy is usually allowed to cure for at least 24 hours.
4. After the epoxy has cured, the wall should be covered with a nonstructural coating (e.g. plaster). Exterior walls need to be protected from UV light by painting. Special fire-resistant coatings are also available.

The construction quality assurance is critical for verifying that the installation was performed in accordance with the manufacturer's specifications. The construction labor needs to be trained (certified) to perform the retrofitting using this technique.

FRP overlays and strips have been widely used for seismic retrofitting of existing masonry buildings since the 1990s in countries like the USA, Japan, Canada, Italy, New Zealand, etc. *Figure 4-41* shows an exterior wall in a masonry building in New Zealand retrofitted using FRP overlay (UA, 2011).

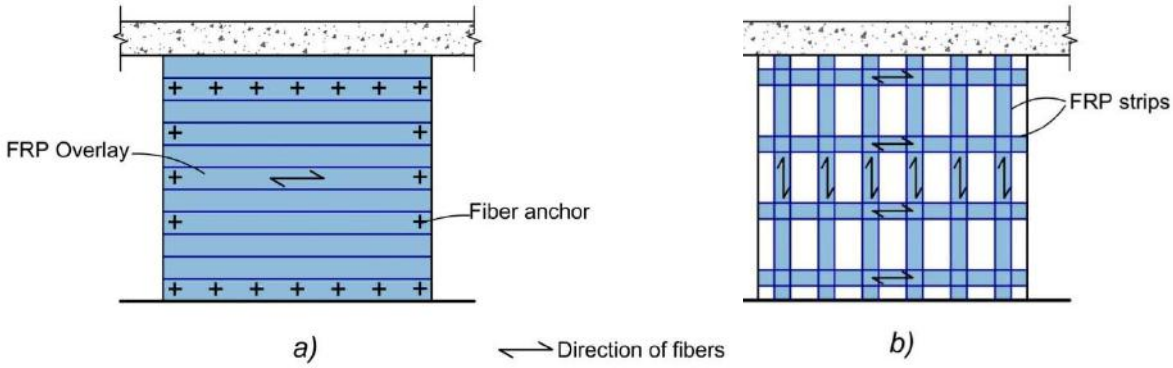

Figure 4-39. Retrofitting of masonry walls using FRPs: a) a FRP overlay with fiber anchors and b) horizontal and vertical FRP strips.

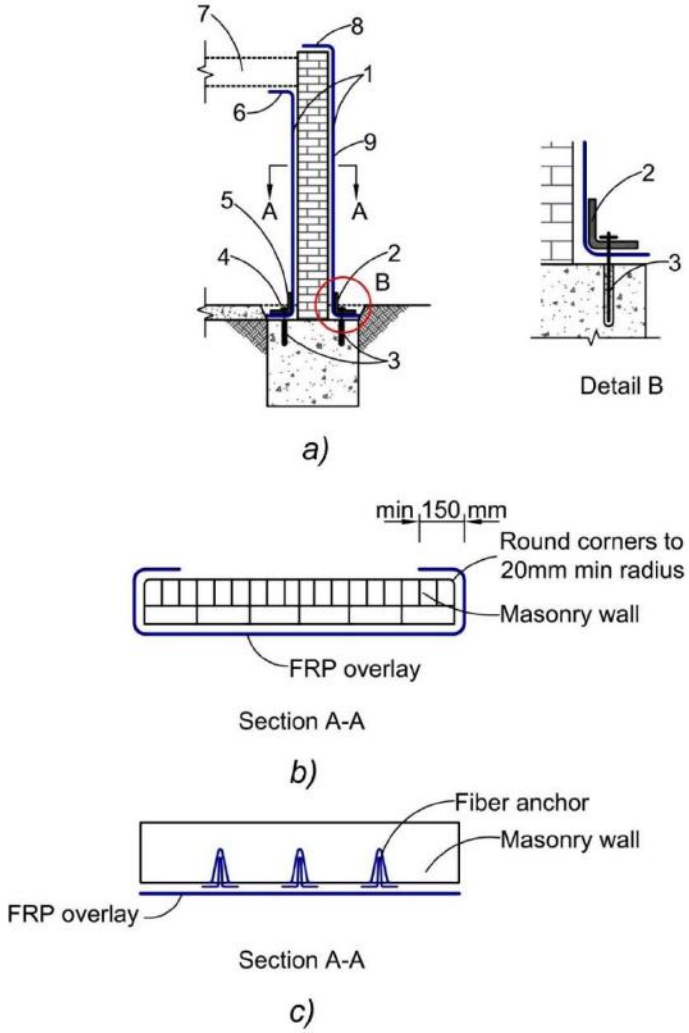

1- Clean the wall surface by wire brushing and apply FRP overlay.
2- Excavate soil up to the foundation level and install steel angles (exterior).
3- Fasten the angles to the foundation with chemical anchors
4- Chip slab on grade to install angles. Fill with grout to restore to the original condition.
5- Fasten edge of FRP with angle and anchors.
6- Extend the FRP to underside of the roof slab.
7- Existing roof slab
8- Extend the FRP to the top of the wall
9- Cover the FRP with plaster and UV/fire protection if needed.

Figure 4-40. Construction of FRP overlays for retrofitting masonry walls: a) wall elevation; b) horizontal section showing wrapping of FRPs around the corner, and c) horizontal section showing fiber anchors.

Figure 4-41. A brick masonry building retrofitted with FRP overlays (visible at the exterior) in New Zealand (Photo: UA, 2011).

4.9 *Comparisons of Seismic Retrofitting Techniques for Reinforced Concrete and Masonry Buildings*

Comparisons of seismic retrofitting techniques for RC and masonry buildings outlined in this chapter are summarized in Tables 4-1 and 4-2. The selected criteria are deemed relevant for selecting the most suitable retrofit technique for a specific application in the KR. The criteria are: i) local availability of construction materials, ii) required level of construction skills, iii) construction cost, iv) disruption to the occupants, and v) required maintenance. It should be noted that the costs have been compared in relative terms (actual retrofit costs are not available in the KR as of June 2018).

Table 4-1. A Comparison of Seismic Retrofitting Techniques for RC Frame Buildings

Retrofitting Technique	Advantages	Disadvantages	Local availability of construction materials	Required level of construction skills	Relative construction cost	Disruption to the occupants	Required maintenance
(1)	(2)	(3)	(4)	(5)	(6)	(7)	(8)
RC jacketing	• One of the most cost-effective retrofitting techniques • Ability of a jacket to have multiple effects (enhancement of flexural and/or shear capacity and/or ductility)	• Adds weight to the structure • Uncertainty with regard to effectiveness of bond between the RC jacket and the existing RC structure • Drilling holes through the existing RC beams/slabs may be required	High	Low	Low	Medium to High	Low
Steel jacketing	• Increases shear capacity and ductility of the columns • Moderate added weight due to steel elements	• Does not increase flexural capacity of the column • Prone to corrosion and fire	High	Medium	Medium	Low	Medium
FRP jacketing	• Increases ductility and/or flexural and/or shear capacity of the RC columns • Light-weight • Rapid installation	• Requires fire and UV protection	Low	Medium to High	High	Low	Low
Addition of RC shear walls	• One of the most effective retrofit techniques • Significantly increases stiffness and reduces lateral displacements	• Possible increase of seismic forces at the wall-to-floor slab interface • Requires a new foundation • Drilling holes through the existing RC beams/slabs is required	High	Medium	Medium	High	Low
Addition of steel bracings	• Adds minimum weight to the structure • Existing doors/windows can be accommodated	• May introduce large internal forces in the adjacent RC beams/columns • Drilling holes through the existing RC beams/slabs is required	High	Medium to High	Medium to High	Medium	High

Table 4-2. A Comparison of Seismic Retrofitting Techniques for Masonry Buildings

Retrofitting Technique	Advantages	Disadvantages	Local availability of construction materials	Required level of construction skills	Relative construction cost	Disruption to the occupants	Required maintenance
(1)	(2)	(3)	(4)	(5)	(6)	(7)	(8)
RC jacketing	• One of the most cost-effective retrofitting techniques • Ability of a jacket to have multiple effects (enhancement of flexural and/or shear capacity and/or ductility)	• Adds weight to the structure • Drilling holes through the existing walls may be required	High	Low	Low	Medium to High	Low
FRP overlays and strips	• Increases shear and/or flexural capacity of the existing masonry walls • Light-weight • Rapid installation	• Requires fire and UV protection	Low	Medium to High	High	Low	Low
Addition of RC shear walls	• One of the most effective retrofit techniques	• Possible increase of seismic forces at the wall-to-floor slab interface • New foundations are required • Drilling holes through the existing RC beams/slabs is required	High	Medium	Medium	High	Low
Addition of steel bracings	• Adds minimum weight to the structure • Existing doors/windows can be accommodated	• May introduce large internal forces in the adjacent structural elements • Drilling holes through the existing RC beams/slabs is required	High	Medium to High	Medium to High	Medium	High

4.10 *Seismic Retrofitting of Horizontal Floor and Roof Diaphragms*

4.10.1 Seismic deficiencies addressed by this retrofit technique

This section is focused on the seismic retrofit of horizontal floor diaphragms, specifically hollow core RC floor slabs which are common in masonry and RC schools in the KR. Seismic deficiencies of this floor system were discussed in Section 3.6.2.

Floor diaphragms which consist of hollow core precast RC planks may have inadequate shear resistance, especially when concrete topping is not present. Cracking may occur at the interface between the planks due to high earthquake-induced shear stresses. As a result, the diaphragm may cease to act as a rigid diaphragm, which is a common seismic design assumption for this floor system.

Chord members at the perimeter of the diaphragm may not have adequate capacity to resist internal axial tension/compression forces due to the earthquake-induced bending moments in the diaphragm.

4.10.2 Description

The objective of the retrofit is to enhance the shear resistance and integrity of the existing floor slab. A common retrofitting technique consists of adding new concrete topping (overlay) cast over the existing floor slab. The overlay needs to be reinforced with the steel mesh embedded into concrete. In order to enhance the integrity of retrofitted floor slab, selected hollow core planks need to be sawcut on the top to access the hollow cores. These hollow cores need to be filled with microconcrete and reinforced with steel dowels. Joints between the adjacent hollow core planks need to be grouted with microconcrete. This retrofitting technique is illustrated in *Figure 4-42*.

Alternatively, FRP overlays can be installed instead of concrete topping. FRP overlays are light-weight and the construction is significantly faster compared to the retrofit using concrete topping.

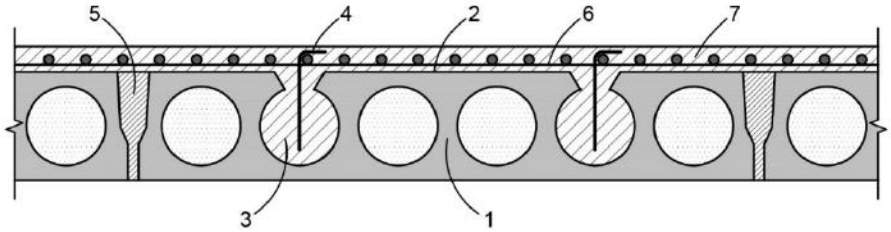

Figure 4-42. Retrofitting of hollow core RC slab with concrete topping: 1- existing slab; 2- removal of existing topping and roughening of the interface; 3- slits cut in the selected hollow cores along the slab length filled with concrete; 4- L-shaped steel bars embedded in the selected hollow cores; 5- re-grouted joints between the hollow core planks (as needed); 6- steel mesh reinforcement; 7- concrete topping.

When chord forces in the diaphragm induced by seismic bending moments (see Figure 4-44) are too high and cannot be resisted by the RC perimeter beams, it is required to retrofit the beam-to-slab connection along the perimeter of a floor plan. This can be achieved by installing new steel angles which need to be attached both to the beam and the hollow core planks, usually by means of steel anchors embedded into the concrete (Figure 4-43).

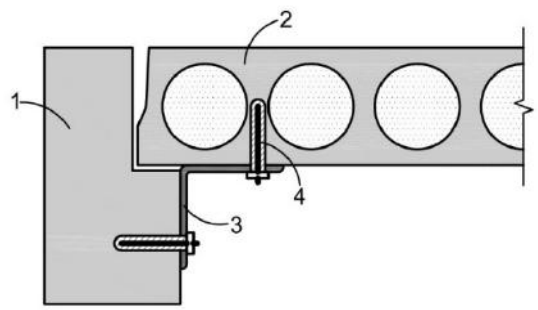

Figure 4-43. Retrofitting of the diaphragm chords at the floor perimeter: 1- existing RC beam; 2- existing hollow core RC plank; 3- steel angle, and 4- steel anchor.

4.10.3 Analysis and design considerations

Girder model is commonly used for seismic design of diaphragms in new buildings, but it can be also used to assess seismic safety of retrofitted diaphragms. It assumes that a floor diaphragm is like an I-shaped girder, in which the web resists shear and the flanges resist bending moments. The model is illustrated in Figure 4-44, which shows a simple plan of horizontal diaphragm at floor level *j* in a building subjected to seismic forces. The structural system is RC frame, consisting of beams and columns. The floor system consists of hollow core planks spanning in one direction (in this case perpendicular to the direction of seismic forces). Seismic forces acting on the diaphragm at the floor level (I_j) can be represented by uniformly distributed load (i_j). The diaphragm is treated as a deep beam, and its supports are provided by vertical elements of the structural system resisting seismic effects (e.g. RC frames or walls). Internal forces in the plane of diaphragm are shear forces Q acting in the same direction as seismic force I_j, and bending moments M due to bending of the diaphragm caused by seismic load I_j. Shear forces Q are highest at the support locations. The diaphragm is able to resist these shear forces and the resulting shear stresses, when that they do not exceed the diaphragm shear resistance (which depends on the diaphragm properties, such as concrete grade, amount and distribution of steel, and dimensions). Distribution of bending moments M depends on the location of vertical elements of the structural system (note that this pertains only to elements aligned in the direction of seismic forces). These bending moments are resisted through the tension and compression forces in chord members located at the floor perimeter and aligned perpendicular to the direction of seismic forces. Note that the location of chord members depends on the direction of seismic forces - chord members are always aligned perpendicular to direction of seismic force.

There are a few useful resources pertaining the seismic analysis and design of precast concrete floor diaphragms in buildings, including Ghosh, Cleland, and Naito (2017); Fleischman (2014), and Nakaki (2000). Zhang and Fleischman (2016) proposed seismic design factors for performance-based design of precast concrete floors. Other useful resources were developed by Moehle, Hooper, and Meyer (2016) and Naeim (2001).

A few relevant analysis and design considerations regarding the diaphragm retrofit are discussed below.

The size of steel mesh reinforcement and L-shaped steel bars embedded into the hole need to be determined based on the design requirements (applied loads) for specific floor slab.

In terms of the floor areas that need to be retrofitted, it may be possible to limit retrofit to the regions of largest shear stress demands (maximum shear forces). Partial retrofit is particularly feasible when FRP overlays are used instead of concrete topping. Retrofit may also be required in the joint areas between the adjacent floor planks in the regions of high seismic shear demand.

When the retrofit is performed by adding new concrete topping, it is usually not feasible to perform partial retrofit – the entire floor slab needs to be retrofitted.
When the retrofit involves the construction of new concrete topping, it is required to check whether the existing floor slab has a sufficient capacity to resist the weight of concrete topping. An additional consideration for the retrofit which involves the construction of concrete topping is related to the topping thickness and reinforcement. Requirements regarding the minimum thickness of concrete topping vary in international codes. For example, New Zealand concrete code NZS3101:2006 (SNZ, 2006) required a 50 mm toping thickness, but that requirement was revised after the 2010&2011 New Zealand earthquakes and it was required to increase the thickness to 75 mm. However, the code requires a check of shear stresses in the hollow core slab which is expected to confirm the actual required thickness of concrete topping. In terms of the topping reinforcement, NZS3101:2006 (SNZ, 2006) prescribed high ductility mesh for the seismic applications. Experimental studies in New Zealand and the 2010&2011 earthquakes revealed instances of mesh fracture in situations where non-ductile mesh had been used.

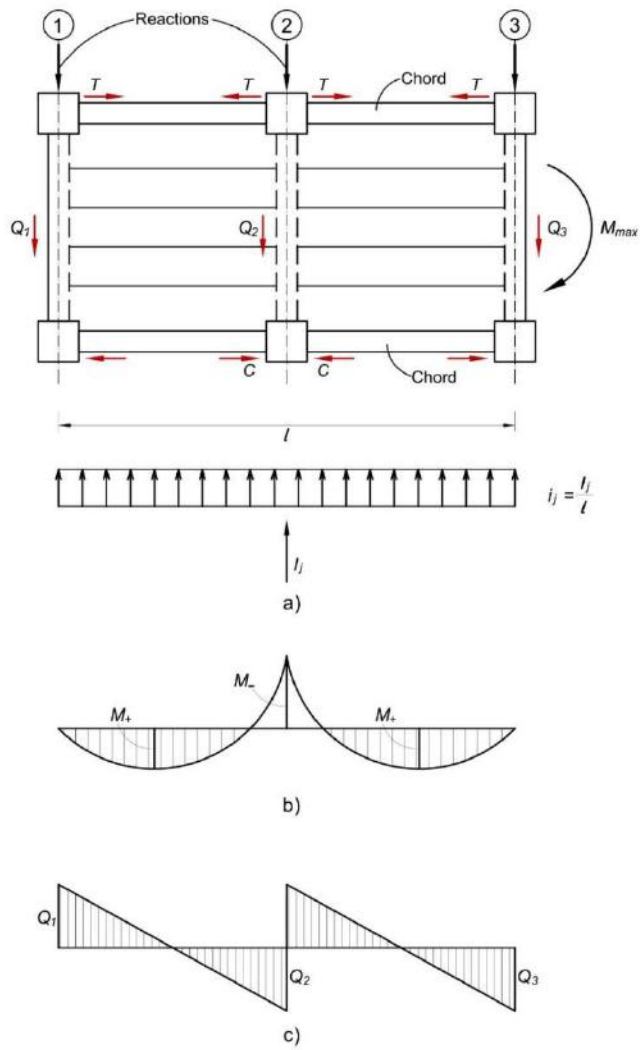

Figure 4-44. Floor diaphragm at level j: a) plan view of the diaphragm showing seismic loading and internal forces: positive and negative bending moment M, shear forces along the frames Q1, Q2, and Q3, and chord forces (T and C); b) bending moment diagram, and c) shear force diagram.

4.10.4 Detailing and construction considerations

The construction procedure for retrofitting of floor slabs is summarized below:

1. Prepare top surface of the existing floor planks by removing existing concrete topping, dust, grease, etc. using wire brushes or sandblasting.
2. Sawcut 70 to 90 mm wide grooves in the slab along the length of selected hollow cores (which need to be later filled with concrete). Clean the holes with blow of compressed air.
3. Place L-shaped steel bars in the holes which have been previously exposed by drilling. The tops of the bars should extend above the top of the slab (to be embedded in the new topping).
4. Place and compact the concrete in the selected hollow cores which have been previously exposed (step 2).
5. The first layer of concrete topping is placed to create a support for the reinforcement (about one-half of the overall topping thickness).
6. The reinforcement (e.g. welded wire mesh) is placed on top of the first layer while the layer is still fresh.
7. The second layer of concrete (one-half of the overall topping thickness) is placed on top of the first layer.

Topping thickness is recommended to be up to 50 mm. The steel mesh reinforcement (size and spacing) should be determined based on the project requirements.

Center-to-center spacing of hollow cores which are filled with concrete may be 50 to 70 cm. Size and spacing of the L-shaped steel bars for the hollow cores is determined based on the project requirements.

Note that electric or pneumatic tools should be used for drilling holes in order to avoid dynamic loads, in accordance with the requirements of СНиП КР 12-01-99.

Implementation of this retrofit technique requires the removal of existing floor covering and is disruptive to the occupants. The floor areas being retrofitted cannot be used during the construction.

4.10.5 Design applications and performance in past earthquakes

There is no published evidence regarding the application of retrofitting of precast RC floors in post-earthquake rehabilitation projects, and there is no published evidence of performance of retrofitted precast RC floors in past earthquakes.

4.10.6 Design codes and guidelines

Seismic retrofit of hollow core precast RC slabs has been addressed by a guideline from the former Soviet Union (Госстрой, 1987).

Seismic retrofitting of floor diaphragms has been discussed in several international codes and guidelines, including UNIDO (1983), FEMA 547 (2006), and Fenwick, Bull, and Gardiner (2010).

4.11 *References*

Resources from the Kyrgyz Republic and the former Soviet Union

СНиП 3.03.01-87. Несущие и ограждающие конструкции (Load-bearing and separating constructions) (in Russian).

СНиП 2.01.07-85*. Нагрузки и воздействия (The Loads) (in Russian).

СП 63.13330.2012. Бетонные и железобетонные конструкции (Concrete and Reinforced Concrete Structures – Basic Requirements) (in Russian).

СП 16.13330.2011. Стальные конструкции (Steel Structures) (in Russian).

СП 52-103-2007. Железобетонные монолитные конструкции зданий (Concrete Monolithic Building Structures) (in Russian).

СП 15.13330.2012. Каменные и Армокаменные Конструкции (Masonry and Reinforced Masonry Structures). Министерство Регионального Развития Российской Федерации, Moscow, Russia (in Russian).

СНиП 22-01-98 КР. Оценка сейсмостойкости зданий существующей застройки (Assessment of seismic safety of buildings). Минархстрой Кыргызской Республики, Bishkek, Kyrgyz Republic (in Russian).

СНиП КР 20-02:2009. Сейсмостойкое строительство. Нормы проектирования (Earthquake engineering design standard). Государственное Агентство По Архитектуре И Строительству При Правительстве Кыргызской Республики, Bishkek, Kyrgyz Republic (in Russian).

СНиП КР31-01:2001. Перепрофилирование помещений жилых зданий существующей застройки (Renovation of the existing residential buildings). Государственное Агентство По Архитектуре И Строительству При Правительстве Кыргызской Республики, Bishkek, Kyrgyz Republic (in Russian).

СНиП КР 52-01:2009. Несущие и ограждающие конструкции (Load-bearing and separating structures). Государственное Агентство по Архитектуре и Строительству при Правительстве Кыргызской Республики, Bishkek, Kyrgyz Republic (in Russian).

СНиП КР 31-08:2013. Школьные здания (School buildings). Государственное Агентство По Архитектуре И Строительству При Правительстве Кыргызской Республики, Bishkek, Kyrgyz Republic (in Russian).

СНиП КР 12-01-99. Техника безопасности в строительстве (Safety in construction). Государственное Агентство По Архитектуре И Строительству При Правительстве Кыргызской Республики, Bishkek, Kyrgyz Republic (in Russian).

ГОСТ 31937-2011. Здания и сооружения. Правила обследования и мониторинга технического состояния (Buildings and building structures. Rules of inspection and monitoring of the technical condition). Межгосударственный Совет по стандартизации, метрологии и сертификации, Стандартифнорм, Москва, 55с (in Russian).

КНИИПСС (1996). Проектирование Зданий и Сооружении в Сейсмических Районах (Design of Buildings and Structures in Seismic Zones), Bishkek, Kyrgyz Republic (in Russian).

Госстрой (1987). Каталог Конструктивныx Решений по Усилению и Восстановлению Строительньx Конструкций Промышленныx Зданий (Catalog of Constructive Solutions for Strengthening and Restoration of Construction Elements of Industrial Buildings), Госстрой СССР, Москва (in Russian).

ЦНИИСК им. Кучеренко (1984). Рекомендации по усилению каменных конструкций зданий и сооружений (Recommendations for Strengthening of Masonry Structures and Buildings), Стройиздат, Москва 3'б с (in Russian).

ЦНИИСК им. Кучеренко (1974). Руководство по проектированию каменных и армокаменных конструкций (Guidelines for the design of stone and reinforced masonry structures), ордена Трудового Красного Знамени Центральный науч.-исслед. ин-т строительных конструкций им. В. А. Кучеренко Госстроя СССР, Стройиздат, Москва, 183 с (in Russian).

Харьковский Промстройниипроект, НИИЖБ. (1992). Рекомендации по проектированию усиления железобетонных конструкций зданий и сооружений реконструируемых предприятий. Надземные конструкции и сооружения (Recommendations for Design of Reinforcement of RC Structures under Reconstruction. Aboveground Structures), Стройиздат, Москва, 191с (in Russian).

Промпроект (2017). Повышение сейсмической безопасности, энергоэффективности и капитальный ремонт пилотной школы №5 им. Ч. Айтматова г.Балыкчы. Проект городского развития «Улучшение сейсмической безопасности и энергоэффективности социальных инфраструктур в городах участниках». Стадия рабочий проект. Конструкции железобетонные 1722-1-КЖ. Проект адаптирован ОАО «Промпроект». (Improving Seismic

Safety, Energy Efficiency and Capital Repairs of Pilot Aitmatov School No. 5 in Balykchy. Urban Development Project, Working Draft Stage, Reinforced Concrete Structures 1722-1-KZh, Adapted by Promproekt OJSC), Бишкек, Kyrgyz Republic (in Russian).

JV “ALL Ingegneria and AIRES Ingegneria” (2017). Preparation of Feasibility Studies and Designs for Improved Energy Efficiency and Seismic Safety of Pilot Schools and Kindergartens in Balykchy and Toktogul, School No. 5 “Aitmatova”– Balykchy- Detail Design – Technical Report – Section 1: General Part (in English).

JV “ALL Ingegneria and AIRES Ingegneria” (2017a). Preparation of Feasibility Studies and Designs for Improved Energy Efficiency and Seismic Safety of Pilot Schools and Kindergartens in Balykchy and Toktogul, School No. 5 “Aitmatova” – Balykchy - Detail Design – Section 2: Structural Retrofit Part (in English).

International resources

ACI (2008). Guide for the Design and Construction of Externally Bonded FRP Systems for Strengthening Concrete Structures, ACI 440.2R-08, American Concrete Institute (ACI), Committee 440, Farmington Hills, MI, USA.

Aguilar J, Juarez H, Ortega R & Iglesias J. (1989). The Mexico Earthquake of September 19, 1985. Typical Cases of Repair and Strengthening of Concrete Buildings, Earthquake Spectra, 5(1): 175–193.

Alcocer, S.M. (1993). RC Frame Connections Rehabilitated by Jacketing, Journal of Structural Engineering, ASCE, 119(5): 1413-1431.

Amiraslanzadeh,R. et al. (2012). A Comparative Study on Seismic Retrofitting Methods for Unreinforced Masonry Brick Walls, Proceedings of the 15th World Conference on Earthquake Engineering, Lisbon, Portugal.

ASCE/SEI (2014). Seismic Evaluation and Retrofit of Existing Buildings, ASCE Standard ASCE/SEI 41-13, American Society of Civil Engineers, Reston, VA, USA.

Badoux M.E. (1987). Seismic Retrofitting of Reinforced Concrete Structures with Steel Bracing System, Doctoral Dissertation, University of Texas, Austin, TX, USA.

Badoux, M. and Jirsa, J.O. (1990). Steel Bracing of RC Frame for Seismic Retrofitting, Journal of Structural Engineering, ASCE, 116(1): 55-74.

BIS (2013). IS 15988:2013 Indian Standard Seismic Evaluation and Strengthening of Existing Reinforced Concrete Buildings — Guidelines. Bureau of Indian Standards, New Delhi, India.

BIS (2009). IS 13935:2009 Indian Standard Seismic Evaluation, Repair and Strengthening of Masonry Buildings — Guidelines. Bureau of Indian Standards, New Delhi, India.

CAN/CSA (2014). Specification for Fibre-Reinforced Polymer (FRP) Materials for Externally Reinforcing Structures, CSA S808-14, Canadian Standards Association, Mississauga, ON, Canada.

CAN/CSA (2012). Design and Construction of Building Structures with Fibre-Reinforced Polymers, CSA S806-12 (reaffirmed 2017). Canadian Standards Association, Mississauga, ON, Canada.

Chakrabarti, A., Menon, D., Sengupta, A.K. (2008). Handbook on Seismic Retrofit of Buildings, Narosa Publishers, India.

Churilov, S. and Dumova-Jovanoska, E. (2012). Analysis of Masonry Walls Strengthened with RC Jackets, Proceedings of the 15th World Conference on Earthquake Engineering, Lisbon, Portugal.

D’Ayala, D., Speranza, E., and D'Ercole, F. (2001). Single-Family Historic Brick Masonry House (Casa unifamiliare in centro storico, Centro Italia), Report 29, Italy, World Housing Encyclopedia, Earthquake Engineering Research Institute, Oakland, CA, USA (http://db.world-housing.net/building/29/).

ElGawady, Lestuzzi, M.P., and Badoux, M. (2004). A Review of Conventional Seismic Retrofitting Techniques for URM, Proceedings of the 13th International Brick and Block Masonry Conference, Amsterdam, The Netherlands.

ElGawady, M., Lestuzzi, P., and Badoux, M. (2006). Analytical Model for In-Plane Shear Behavior of URM Walls Retrofitted with FRP, Composites Science and Technology, 66:459–474.

EN 1998-1:2004 (2004). Eurocode 8: Design of Structures for Earthquake Resistance – Part 1: General Rules, Seismic Actions and rules for buildings, European Committee for Standardization, Brussels, Belgium.

EN 1998-3:2005 (2005). Eurocode 8: Design of Structures for Earthquake Resistance – Part 3: Assessment and Retrofitting of Buildings and Bridges, European Committee for Standardization, Brussels, Belgium.

Fardis, M. (2009). Seismic Design, Assessment and Retrofitting of Concrete Buildings: Based on EN-Eurocode 8, Springer, Dordrecht, Germany.

FEMA 547 (2006). Techniques for the Seismic Rehabilitation of Existing Buildings (FEMA 547). Washington D.C., USA.

FEMA 306 (1999). Evaluation of Earthquake Damaged Concrete and Masonry Wall Buildings- Basic Procedures Manual (FEMA 306). Federal Emergency Management Agency, Washington, D.C., USA.

FEMA 308 (1999a). Repair of Earthquake Damaged Concrete and Masonry Wall Buildings (FEMA 308). Federal Emergency Management Agency, Washington, D.C., USA.

Fenwick, R. C., Bull, D. K. and Gardiner, D. R. (2010). Assessment of Hollow-core Floors for Seismic Performance, Research Report, 2010-02, Department of Civil and Natural Resources Engineering, University of Canterbury, New Zealand, ISSN 1172-9511 (https://ir.canterbury.ac.nz/handle/10092/4211).

FIB (2001). Externally Bonded FRP Reinforcement for RC Structures, International Federation for Structural Concrete, Bulletin No. 14, Lausanne, Switzerland.

FIB (2003). Seismic Assessment and Retrofit of Reinforced Concrete Buildings, State-of-the-art report, International Federation for Structural Concrete, Bulletin No. 24, Lausanne, Switzerland.

FIB (2006). Retrofitting of Concrete Structures by Externally Bonded FRPs, with Emphasis on Seismic Applications, International Federation for Structural Concrete, Bulletin No. 35, Lausanne, Switzerland.

Fleischman, R.B. (2014). Seismic Design Methodology Document for Precast Concrete Diaphragms, Charles Pankow Foundation, Vancouver, WA, USA.

Foutch,D.A., Hjelmstad,K.D., Del Valle Calderón, E., Figueroa Gutiérrez,E., and Downs,R.E. (1989). The Mexico Earthquake of September 19, 1985 – Case Studies of Seismic Strengthening for Two Buildings in Mexico City, Earthquake Spectra, 5(1): 153-174.

Ghosh, S.K., Cleland, N.M., and Naito,C.J. (2017). Seismic Design of Precast Concrete Diaphragms: A Guide for Practicing Engineers. NIST GCR 17-917-47, NEHRP Seismic Design Technical Brief No. 13, The National Institute of Standards and Technology, Gaithersburg, MD, USA.

GREAT (2001). Repair and Strengthening Guide for Earthquake Damaged Low-Rise Domestic Buildings in Gujarat, India. Gujarat Relief Engineering Advice Team, India.

Gulkan, P., Aschheim, M., and Spence, R. (2003). Reinforced Concrete Frame Building with Masonry Infills, Report 64, Turkey, World Housing Encyclopedia, Earthquake Engineering Research Institute, Oakland, CA, USA (http://db.world-housing.net/building/64/).

Hutchison, D., Yong, P., McKenzie, G. (1984), Laboratory Testing of a Variety of Strengthening Solutions for Brick Masonry Wall Panels, Proceedings of the 8th World Conference on Earthquake Engineering, San Francisco, USA, pp. 575-582.

ICC (2012). International Existing Building Code, International Code Council Inc., USA.

ICC (2017). Concrete and Reinforced and Unreinforced Masonry Strengthening Using Externally Bonded Fiber-reinforced Polymer (FRP) Composite Systems, AC125, International Code Council, USA.

INRC (2014). Guide for the Design and Construction of Externally Bonded FRP Systems for Strengthening Existing Structures: Materials, RC and PC structures, Masonry Structures, Italian National Research Council, Advisory Committee on Technical Recommendations for Construction, CNR-DT 200 R1/2013, Rome, Italy, 154 pp.

ISIS (2008). FRP Rehabilitation of Reinforced Concrete Structures, Design Manual No. 4, ISIS Canada Corporation, Winnipeg, MB, Canada.

ISIS (2004). An Introduction to FRP Strengthening of Concrete Structures, ISIS Educational Module 4, ISIS Canada: A Canadian Network of Centres of Excellence, Winnipeg, MB, Canada.

Jain, S.K., Murty C.V.R., Jaiswal A., Shah D, Mehta V.V., Shah R.J., and Desai,N.S. (2002). Postearthquake Handling of Buildings. Earthquake Spectra, 18(S1): 297-317.

Jara M, Hernandez C, Garcia R & Robles F. (1989). Mexico Earthquake of September 19, 1985. Statistics of Damage and Retrofitting Techniques in Reinforced Concrete Buildings affected by the 1985 Earthquake, Earthquake Spectra, 5(1):145–151.

JBDPA (2001). Guidelines for Seismic Retrofit of Existing Reinforced Concrete Buildings and Commentary, Japan Building Disaster Prevention Association, Tokyo, Japan.

JBDPA (2001a). Earthquake Resistance Evaluation Standards for Existing Reinforced Concrete Buildings and Commentary, Japan Building Disaster Prevention Association, Tokyo, Japan.

Jirsa, J. (2010). Research on Seismic Rehabilitation of RC Structures – Past and Future, Proceedings, US-Japan Symposium on Seismic Rehabilitation of Concrete Structures.

Karantoni, F. and Fardis, M. (1992). Effectiveness of Seismic Strengthening Techniques for Masonry Buildings, Journal of Structural Engineering, ASCE, 118(7): 1884-1902.

Kehoe, B. E. (1996). Performance of Retrofitted Unreinforced Masonry Buildings, Proceedings of the 11th World Conference on Earthquake Engineering, Acapulco, Mexico, Paper No. 1417.

Lutman, M. and Tomaževič, M. (2003). Unreinforced Masonry Building, Report 73, Slovenia, World Housing Encyclopedia, Earthquake Engineering Research Institute, Oakland, CA, USA (http://db.world-housing.net/building/73/).

Mejia L.G. (2002). Gravity Concrete Frame Buildings (Predating Seismic Codes), Report 11, Colombia, World Housing Encyclopedia, Earthquake Engineering Research Institute, Oakland, CA, USA (http://db.world-housing.net/building/11/).

Moehle, J.P., Hooper, J.D., and Meyer, T.R. (2016). Seismic Design of Cast-in-Place Concrete Diaphragms, Chords, and Collectors: A Guide for Practicing Engineers. Second Edition, NEHRP Seismic Design Technical Brief No. 3, NIST GCR 16-917-42, The National Institute of Standards and Technology, Gaithersburg, MD, USA.

Moehle, J.P. (2000). State of Research on Seismic Retrofit of Concrete Building Structures in the US, Proceedings of the US-Japan Symposium and Workshop on Seismic Retrofit of Concrete Structures – State of Research and Practice.

Murty, C.V.R. (2010). Earthquake Tips – Learning Earthquake Design and Construction, Indian Institute of Technology Kanpur and Building Materials and Technology Promotion Council, India.

Nakaki, S.D. (2000). Design Guidelines for Precast and Cast-In-Place Concrete Diaphragms. EERI professional fellowship report, Earthquake Engineering Research Institute, Oakland, CA, USA.

NIST (1997). Development of Procedures to Enhance the Performance of Rehabilitated URM Buildings, Building and Fire Research Laboratory, National Institute of Standards and Technology, Report NIST GCR 97-724-1, Gaithersburg, Maryland, USA.

Nikolic-Brzev, S. and Sherstobitoff, J. (1998). Seismic Upgrade Techniques for Concrete Reservoirs - a Canadian Experience, Paper 255, Proceedings of the Sixth US National Conference on Earthquake Engineering, Seattle, WA, USA.

Priestley, M.J.N. and Seible, F. (1995). Design of Seismic Retrofit Measures for Concrete and Masonry Structures, Construction and Building Materials, 9(6): 365-377.

Proença, J. M. et al. (2012). Strengthening of Masonry Wall Load Bearing Structures with Reinforced Plastering Mortar Solution, Proceedings of the 15th World Conference on Earthquake Engineering, Lisbon, Portugal.

Sabelli, R., Roeder, C.W., and Hajjar, J.F. (2013). Seismic Design of Steel Special Concentrically Braced Frame Systems: A Guide for Practicing Engineers, NEHRP Seismic Design Technical Brief No. 8, NIST GCR 13-917-24, National Institute for Standards and Technology, USA.

Snow, B. (1999). Seismic Reinforcing of Masonry Walls with Shotcrete, Shotcrete Magazine, November, pp.14-16.

SNZ (2006). NSZ 3101:2006 Concrete Strucure Standard Part 1: The design of concrete standards, Standards New Zealand, Wellington, New Zealand.

Sugano S. (1981). Seismic Strengthening of Existing Reinforced Buildings in Japan, Bulletin of the New Zealand National Society for Earthquake Engineering, 14(4):209–222.

Thermou, G.E., and Elnashai, A.S. (2006). Seismic Retrofit Schemes for RC Structures and Local–Global Consequences, Prog. Structural Engineering Materials, 8: 1-15.

Thermou, G.E., Pantazopoulou, S.J., and Elnashai, A.S. (2004). Upgrading of RC Structures for a Target Response Shape, Proceedings of the 13th World Conference on Earthquake Engineering, Vancouver, BC, Canada, Paper No. 1412.

Tomaževič, M. (1999). Earthquake-Resistant Design of Masonry Buildings, Imperial College Press, London, U.K.

Triantafillou, T. (2006). General Concepts and Design Aspects – Materials and Techniques, International Federation for Structural Concrete, Bulletin No. 35, Lausanne, Switzerland.

Tsionis, G., Apostolska, R., and Taucer, F. (2014). Seismic Strengthening of RC Buildings, Institute for the Protection and Security of the Citizen, Joint Research Centre, European Commission, Ispra, Italy, 70 pp.

UA (2011). Commentary to Assessment and Improvement of Unreinforced Masonry Buildings for Earthquake Resistance, Supplement to “Assessment and Improvement of the Structural Performance of Buildings in Earthquakes”, Draft, Faculty of Engineering, the University of Auckland, New Zealand.

UNIDO (1983). Building Construction Under Seismic Conditions in the Balkan Region: Repair and Strengthening of Reinforced Concrete, Stone and Brick Masonry Buildings, Vol.5, First Edition, United Nations Industrial Development Programme, Vienna, 231 pp.

Zhang, D., and Fleischman, R.B. (2016). Establishment of performance-based seismic design factors for precast concrete floor diaphragms, Earthquake Engineering and Structural Dynamics, Vol. 45, No. 5.

5 Retrofit Case Study 1: Reinforced Concrete Frame Building

5.1 Building Description

This two-story school building was constructed in 1970 according to СНиП II-В.1-62 Code Concrete and Reinforced Concrete (issued in 1962) and seismic code СНиП II.А-12.62 The Building in Seismic Areas. The overall building height is 7.42 m.

The building has an irregular plan shape, and it has built up area per floor of 2378 m.sq. Ground floor plan is shown in *Figure 5-1*. The building is divided into 11 rectangular-shaped blocks by means of separation joints (seismic gaps). A floor plan showing individual building blocks is presented in *Figure 5-2*.

The structural system consists of precast RC frames (columns and beams) which are connected by welding. This construction technology was known as Series IIS-04 in the former Soviet Union (see Section 3.6.2 for a detailed description). The original design for buildings of Series IIS-04 was developed for building sites with seismic intensity of 8 bals, but the school under consideration was built in the area with seismic intensity of more than 9 bals. Seismic zonation maps for the KR has changed since 1970, when the building was originally constructed.

Floor and roof structures consist of precast hollow RC slabs which span in one direction and are 220 mm thick. These floor and roof slabs are overlaid by at least 20 mm thick concrete topping.

Interior partition walls are made of unreinforced brick masonry: there are 125 mm thick walls between the classrooms and 250 mm thick walls in longitudinal direction between the classrooms and corridors. The exterior precast RC wall panels (thickness 300 mm) are attached to the exterior columns by welding, as discussed in Section 3.6.2 (see Figure 3-32).

This chapter presents a detailed discussion on the seismic retrofit for building block A. Typical floor plans for Block A are presented in Figures 5-3 and 5-4. The block has rectangular cross-section and its plan dimensions are: 33 m length by 12 m width. The overall height is 7.42 m.

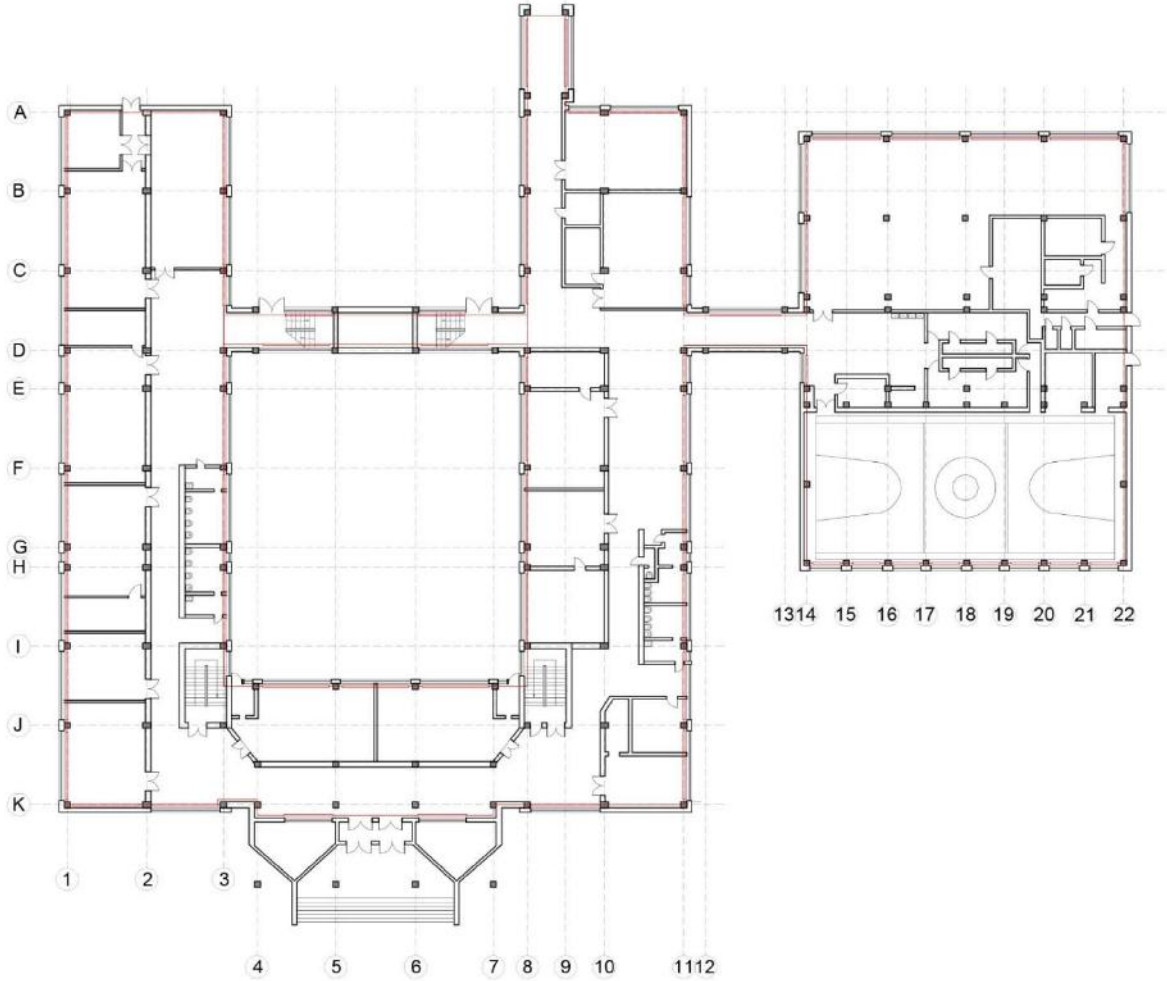

Figure 5-1. Floor plan of the school building.

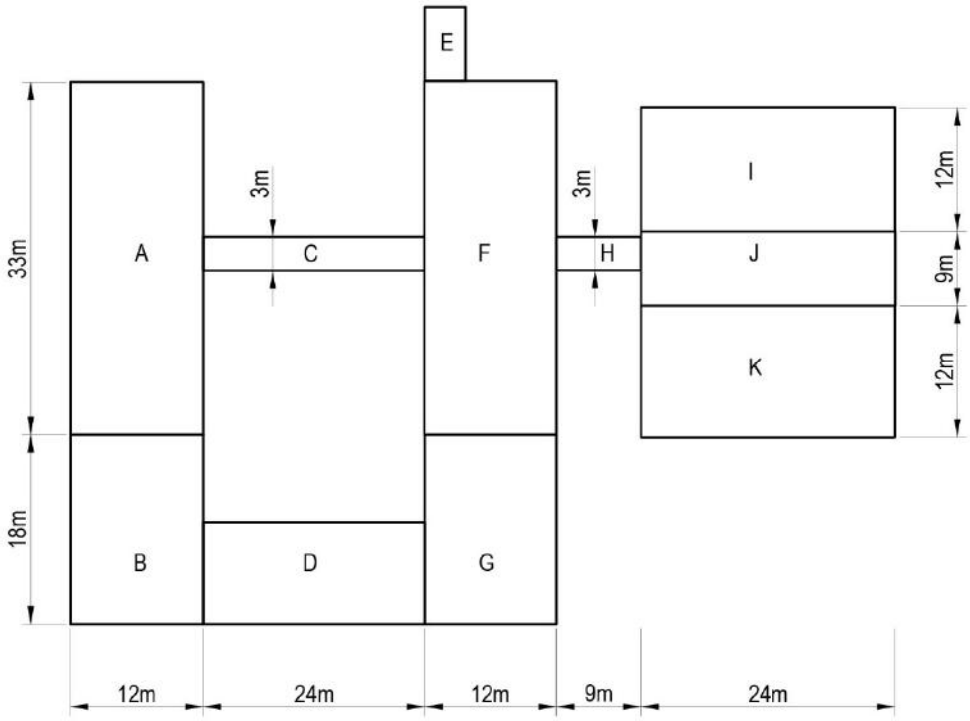

Figure 5-2. Building blocks.

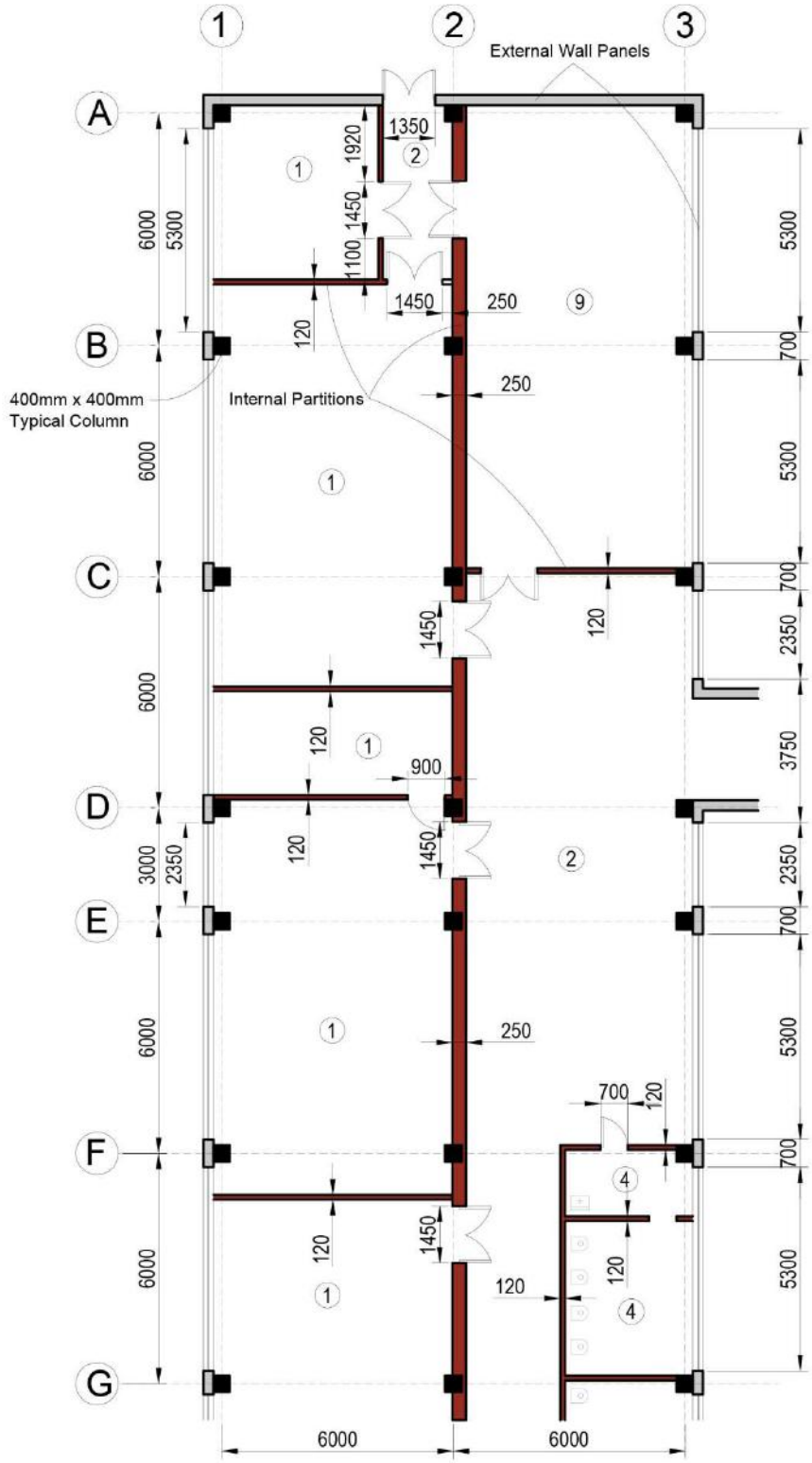

Figure 5-3. First floor plan – Block A.

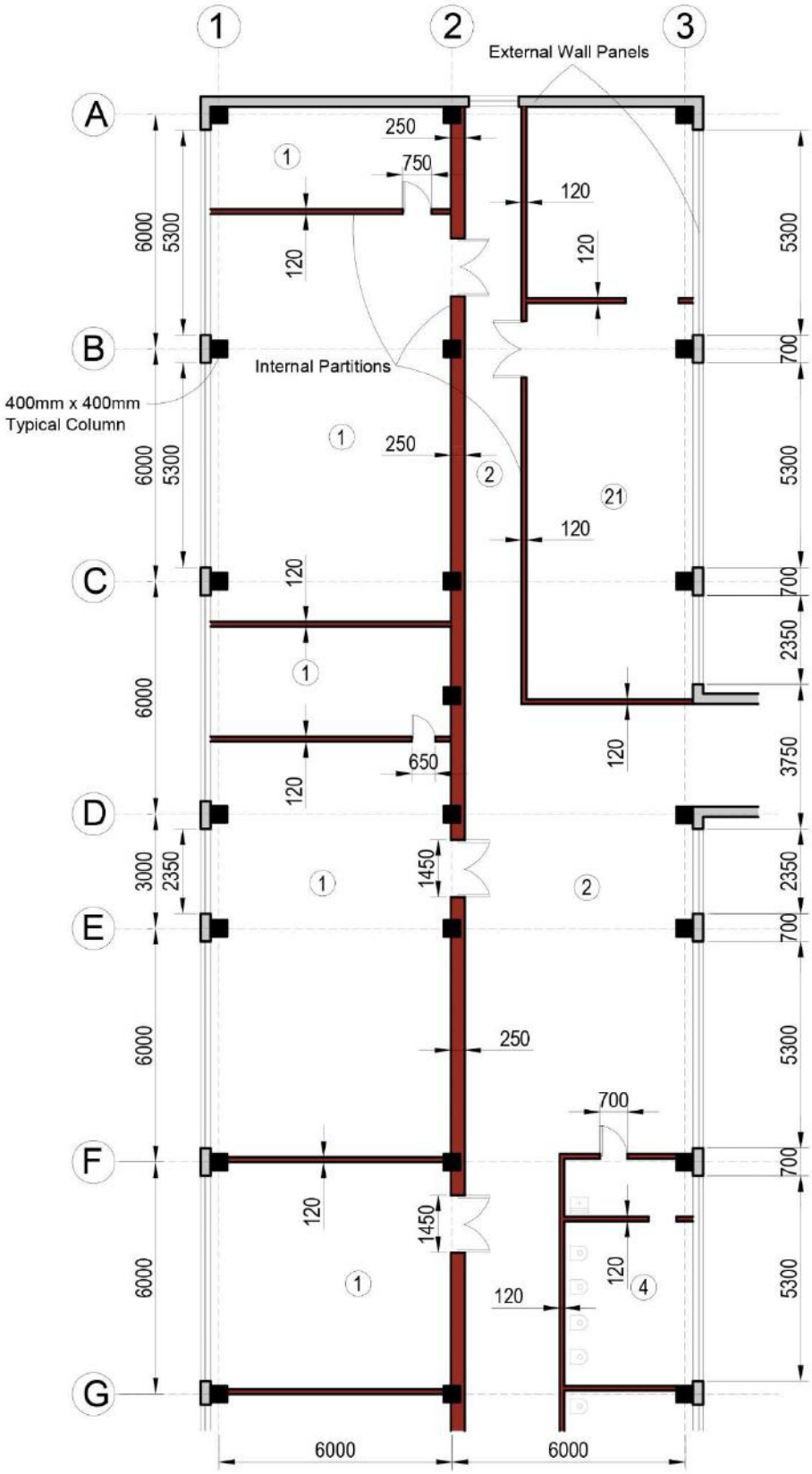

Figure 5-4. Second floor plan – Block A.

A detail showing connections of precast RC frame members (Series IIS-04) is presented in Figure 5-5. It can be seen that the columns are joined above the floor level. Beams and columns are joined by means of a welded connection, through a steel plate which is welded both to a beam and a column.

Building components are connected to the columns through inserts, RC cantilevers, welded metal cantilevers and supporting tables in columns. Columns have a unified set of inserts. Some column inserts in projects can remain untapped. In such case, it should be specified which column inserts may be neglected.

Metal supporting tables and cantilevers are welded to the columns before cantilevers are assembled. These supporting tables are used for columns to support wall-attached slabs.
The supporting tables are only used to connect near-stairs extension slabs and wall-attached slabs in the inner corner of a building to columns.

All floor slabs are placed on flanges on a 10 mm thick cement mortar bed spread just before the assembly. Braced (wall-attached and middle) slabs are laid after the frame is being mounted. Slab planks are welded at their junctions. These slabs are also welded to the columns and beams. Floor slab joints are sealed with Grade 200 mortar or higher. It must be ensured that jointing mortar strongly bonds to side surfaces of floor slabs.

Columns have 400 mm square cross-section and beams have an ⊥-section with 420 mm flange width and 470 mm overall depth. Beam web is 240 mm wide. Columns are reinforced with 4 longitudinal bars. The spacing of transverse reinforcement is variable (from 100 to 300 mm), but 100 mm spacing was considered for the seismic analysis, because this spacing was used at column end zones at each floor level. Beams are reinforced with four longitudinal reinforcing bars (two at the bottom and two at the top). Stirrup spacing in the beams is variable, but 75 mm spacing was considered for the seismic analysis, since this spacing was used at beam end zones (close to the column faces). Transverse reinforcement in beams and columns has 90-degree ties. Precast concrete slab planks are 1200 mm wide and 220 mm thick. Each plank has 6 hollow cores (156 mm diameter). Slabs are reinforced with 14 mm diameter longitudinal reinforcement at the bottom (4 bars per plank).

Geometric properties and reinforcement information for columns, beams, and slabs are illustrated in Figure 5-6.

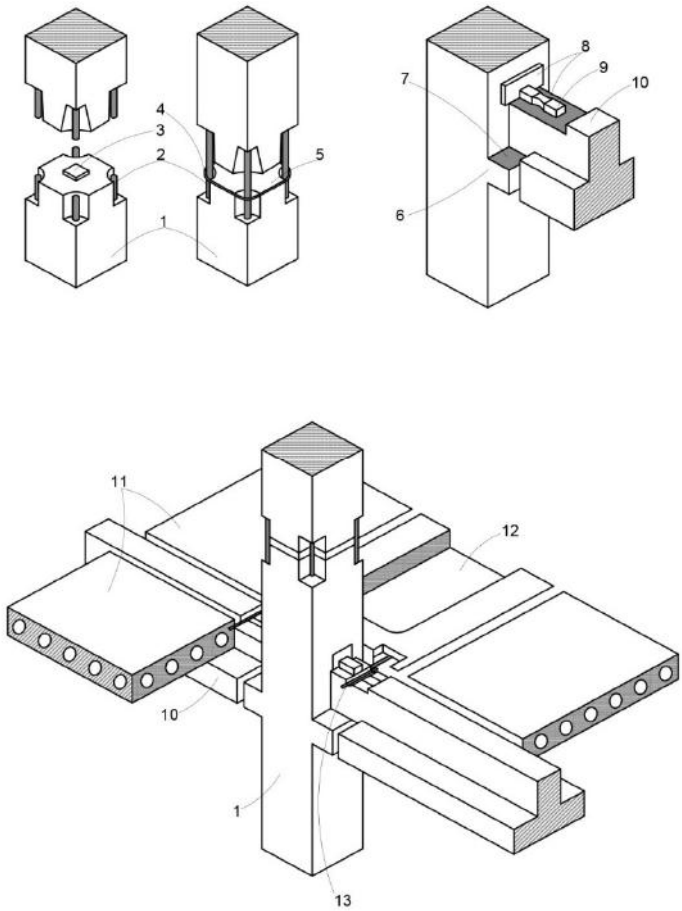

Figure 5-5. Precast RC frame elements and their connections: 1 – concrete column; 2 – free length of reinforcement; 3 – concrete corbel; 4 – steel link; 5 – grouted joint; 6 – concealed column cantilever; 7, 8 – built-in items; 9 – steel splice piece; 10 – concrete beam; 11 – floor slab; 12 – column (braced) slab; 13 – steel tie.

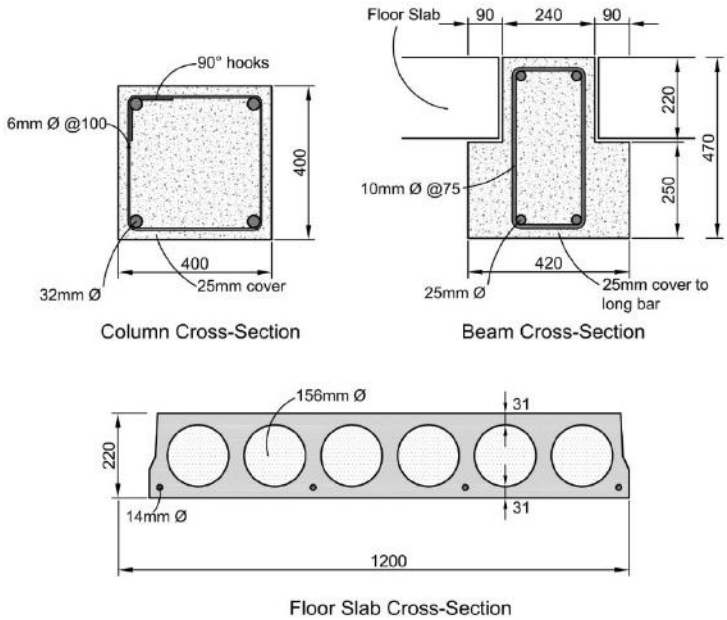

Figure 5-6. Cross-sectional dimensions and reinforcement for columns, beams, and slabs.

5.2 Numerical Model of the Existing Building

5.2.1 Description of the model and the key modelling assumptions

A 3-D frame model was used for the linear elastic analysis (Spectral Method), as shown in Figure 5-7. The model consists of linear elements (beams and columns) and 2-D slab elements.

The following important modelling assumptions were taken in this case study:

1. **Rigid beam-column connections were assumed.** In other words, RC frame was treated as a monolithic moment frame structure. In reality, this is a precast structure with the welded beam-column connections and welded column splices (according to Seria IIS-04, see Section 3.6.2). Both linear and nonlinear seismic analyses presented in this chapter considered monolithic beam-column connections, however a parametric study was performed to evaluate the effect of welded connection on the seismic response of the existing structure (see Section 5.3.3).
2. **It was assumed that floor and roof slabs act like rigid diaphragms.** In this case, a flexible RC frame system is supported by precast hollow RC floors. The assumption that floors act as rigid diaphragms is deemed reasonable for this analysis. Validity of the assumption could be verified by comparing relative diaphragm displacements and the total lateral displacements at the same floor level. Para 4.3.1 of Eurocode 8, Part 1 (EN 1998-1:2004) states that the diaphragm can be considered as rigid when the relative diaphragm displacements don't exceed 10% of the absolute (total) seismic horizontal displacements at the floor level under consideration.
3. **It was assumed that the brick masonry partition walls are isolated from the frame structure by a gap and that they don't contribute to the frame stiffness for seismic analysis purposes** (see Section 3.6.2.1). The mass of these partition walls was considered for determining seismic weight of the building.
4. **The stiffness of non-structural exterior walls was not considered in the analysis.** These walls are precast RC panels attached to the exterior columns by means of the welded connections (see Figure 3-32). It was assumed that the mass of the walls contributes to the seismic weight of the building. A discussion regarding the stiffness of RC frame with exterior precast walls is presented later in this section.
5. **It was assumed that the model has pinned connections at the base for horizontal (X and Y) directions and that the model is infinitely rigid in vertical direction (although Figure 5-7 shows a model with the fixed base supports).** A discussion regarding the support conditions is included later in this section.

It is important to note that the above assumptions were deemed reasonable for the analysis of this structure, but they should not be used for seismic analyses of other structures without considering specific features of each structure.

It is expected that the exterior wall panels will initially cause a stiffness increase of the RC frames to which they are attached. These exterior walls are likely going to experience a brittle failure at the welded connections. Since the brittle failure is expected, shear capacity of an exterior panel is governed by the weld capacity. After the exterior walls experience failure, RC frames are expected to behave like bare frames. This is illustrated in Figure 5-8, which shows a nonlinear base shear versus lateral displacement relationship for a typical exterior 2-D frame subjected to in-plane seismic effects (this is a result of nonlinear static analysis discussed later in Section 5.3.2). Initially, the frame and the exterior walls act in unison (see dashed line 1-2). When the total capacity of all welded panel connections has been reached (point 2), the panels are expected to disconnect from the frame and topple (this is based on an assumption that all welded connections fail simultaneously). Subsequently, the frame behaves as a bare frame (solid line 3-4) and its stiffness is no

longer affected by the exterior walls. This is a simplified scenario, but it can be used to illustrate a conceptual failure mechanism for exterior panels. It is possible that at the initial stage (when exterior panels are rigidly connected to the frames) these panels may induce additional torsional effects in the structure. These torsional effects may need to be considered in the seismic analysis, in addition to the torsional effects due to other sources.

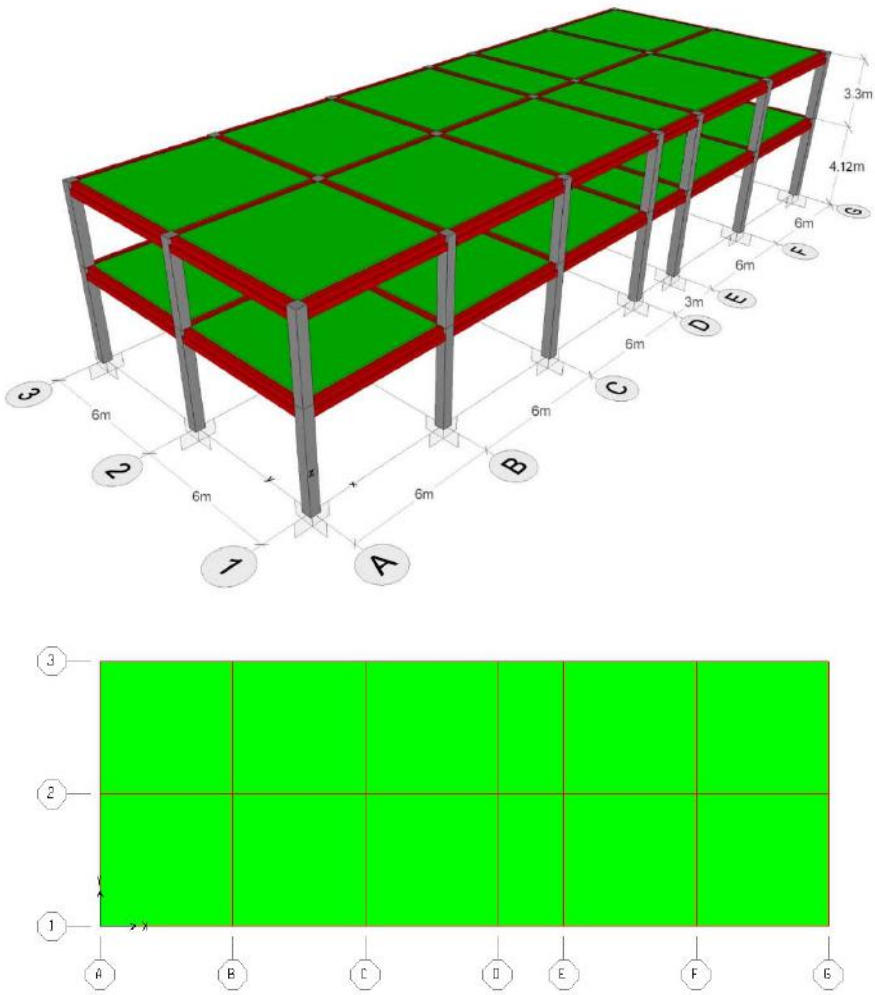

Figure 5-7. Numerical model of the frame structure for 3-D analysis (all dimensions in m).

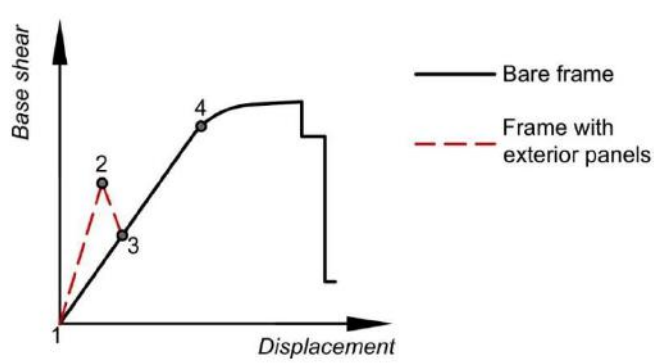

Figure 5-8. Capacity curves for the frame model with exterior panels (dashed line) and a bare frame (solid line).

The following 3 column support conditions were initially considered:

1. Pinned base conditions (point supports),
2. Fixed base conditions (point supports), and
3. Isolated footings at the base (plan dimensions 2.1 by 2.1 m and 1.0 m thickness) and flexible springs in vertical direction with stiffness 3000 t/m^3.

Three different models (with each of the above support conditions) were analyzed to determine dynamic properties of the structure. However, only the model with pinned base conditions was used for both linear and nonlinear seismic analyses. It is believed that pinned base support conditions are most suitable to simulate dynamic behavior of a framed structure in which columns are supported by isolated footings.

The following 2-D models were used for nonlinear pushover analysis: Frame 1 in longitudinal (X) direction and frame B in transverse (Y) direction (see Figure 5-9).

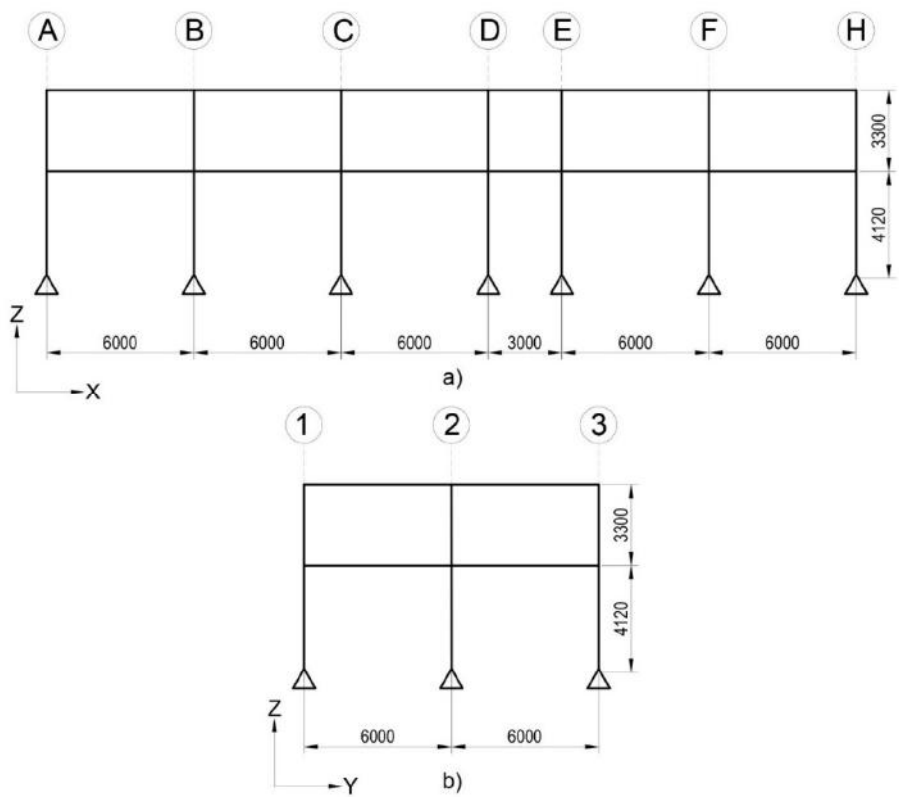

Figure 5-9. Numerical models for 2-D analysis: a) frame 1 in longitudinal direction and b) frame B in transverse direction (all dimensions in mm).

5.2.2 Material Properties

Concrete and steel material properties for the RC structural elements are summarized below.

Table 5-1. Concrete Properties: Existing Building

No.	Property	Unit	Value
1	Modulus of elasticity	t/m^2	3.06x10^6
2	Design axial compression strength	t/m^2	1480
3	Normative axial tensile strength	t/m^2	163
4	Mass density (2500 * 1.1)	kg/m^3	2750

Table 5-2. Steel Properties: Existing Building
Longitudinal reinforcement: Grade A-III
Transverse reinforcement: Grade A-I

No.	Property	Unit	Value
1	Modulus of elasticity	t/m^2	2.0x10^7
2	Design tensile strength of longitudinal reinforcement	t/m^2	37500
3	Design tensile strength of transverse reinforcement	t/m^2	30000

5.2.3 Seismic weight

The masses included in the seismic weight are due to self-weight of structural elements, self-weight of interior and exterior walls, live load, and snow load. The design seismic mass was obtained by multiplying prescribed load by an appropriate reliability coefficient (γ_f) in accordance with СНиП 2.01.07-85*.

The following prescribed occupancy (live) loads were used for the analysis:
1. Corridors, stairways, hallways, foyers of public buildings: 300 kg/m^2 (γ_f = 1.2)
2. Office space and classrooms: 200 kg/m^2 (γ_f = 1.2)
3. Roof: 70 kg/m^2 (γ_f = 1.3)

Snow load on the roof is equal to 70 kg/m^2 (γ_f = 1.4).

A summary of the masses taken for seismic analysis is presented in *Table 5-3*. Note that the floor and roof plan area was taken as 396 m^2.

Table 5-3. Seismic weight

No	Loads	Weight (tons)
1	Building weight	229.2
2	Total load from floor and roof	604.3
3	Total load from external walls and partitions	343.0
4	Total live load	145.1
5	Total snow load	38.8
	Total	1360.4

The total seismic weight of 1360 t was considered for the seismic analysis.

The mass was distributed at floor and roof levels based on the tributary masses. Masses of the exterior walls were lumped around the building perimeter at the floor level.

5.3 Seismic Evaluation of the Existing Building

5.3.1 Linear elastic analysis (Spectral Method)

5.3.1.1 Seismic analysis parameters

Spectral Method was used for seismic analysis according to paragraph 5.2.10 of СНиП КР 20-02:2009. Refer to Section 2.4.1 for a description of the Spectral Method and seismic analysis parameters.

The following seismic hazard parameters were considered in the analysis:
1. Soil category III
2. Seismicity more than 9 bals (Table 5.1 of СНиП КР 20-02:2009)

Soil properties were taken based on paragraph 5.3.3 of СНиП КР 20-02:2009. An approximate assumption was taken that C_{z1} = 300*10 = 3000 t/m^3.

The values of dynamic coefficient β for soil category III depend on the fundamental period *T* and can be determined from the following relationship (Table 5.7 of СНиП КР 20-02:2009):

For $T \leq 0.96$: $\beta = 2.5$
For $0.96 < T \leq 2.0$: $\beta = 2.4/T$
For $T > 2.0$: $\beta = 1.2$

The following coefficients were used for the seismic analysis (СНиП КР 20-02:2009), see Section 2.4.1:
K_1 = 1.2 importance factor for schools (Table 5.3)
K_2 = 0.30 coefficient of structural scheme – RC frame (Table 5.4)
K_3 = 1.0 + 0.06 * (2-5) = 1.0 coefficient which depends on the building height ($1.0 \leq K_3 \leq 1.8$)
K_ψ = 1.0 the energy dissipation coefficient (Table.5.6)
A = 0.7 seismic hazard coefficient – for more than 9 points (bals) (Table 5.5)

The maximum acceleration for the response spectrum was determined from the following equations presented in Section 2.4.1:

$$S_{ik} = K_1 K_2 K_3 S_{0ik},$$
$$S_{0ik} = Q_k A \beta_i K_\psi \eta_{ik}$$

The product of these coefficients is equal to

$$K_1 K_2 K_3 K_\psi A = 1.2 * 0.3 * 1.0 * 1.0 * 0.7 = 0.25$$

The maximum spectral acceleration shown in Figure 5-10 is equal to

0.25*2.5*g = 0.625*g = 6.13 m/sec^2

where g = 9.81 m/sec^2 is acceleration of gravity

The following load combination was considered for seismic analysis, according to Table 5.2 of СНиП КР 20-02:2009:

$$0.9\sum A + 0.8\sum B + 0.5\sum C + 1.0 * S$$

where *A* refers to permanent load (self-weight of the structure), *B* refers to occupancy (live) load, *C* refers to short-term loads (due to wind, snow etc.), and *S* refers to seismic load (see СНиП 2.01.07-85* for load descriptions).

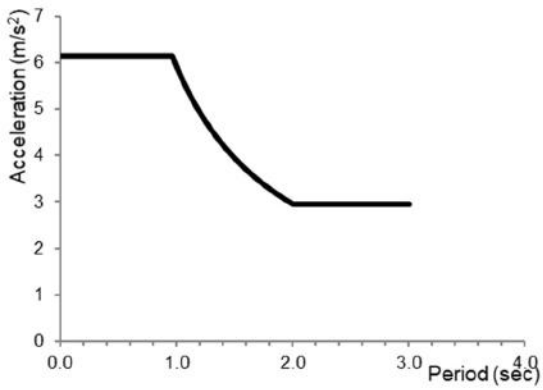

Figure 5-10. Design acceleration response spectrum considered for the seismic analysis.

5.3.1.2 Dynamic properties of the structure

Modal analysis was performed to obtain dynamic properties for 3 numerical models, which were different only in terms of the base support conditions (pinned/fixed/isolated footings). The results, presented in Table 5-4, show a significant difference between the fundamental period values for the pinned supports (1.15 sec) and fixed supports (0.63 sec), as expected. The fundamental period for the third model (isolated footings) is 0.79 sec, that is, in between the two extreme values.

The review of mass participation factors has shown that in all cases, more than 90 % modal mass in Y-direction is associated with the first mode, and more than 90 % modal mass in X-direction is associated with the second mode. It can be concluded that the structure is predominantly influenced by the first vibration mode for the specific direction (X or Y). Figure 5-11 shows mode shapes for translational modes in X- and Y- directions and a torsional mode.

Table 5-4. Vibration periods for different support conditions

Base Supports	Pinned	Fixed	Isolated Footings
Mode	Period (sec)		
1 (Y-dir)	1.153	0.631	0.790
2 (X-dir)	1.115	0.608	0.763
3	1.034	0.561	0.698
4	0.211	0.192	0.204
5	0.204	0.186	0.198
6	0.189	0.173	0.190
7	0.127	0.126	0.184
8	0.124	0.124	0.183
9	0.123	0.122	0.171
10	0.121	0.121	0.154
11	0.118	0.118	0.151
12	0.115	0.115	0.150

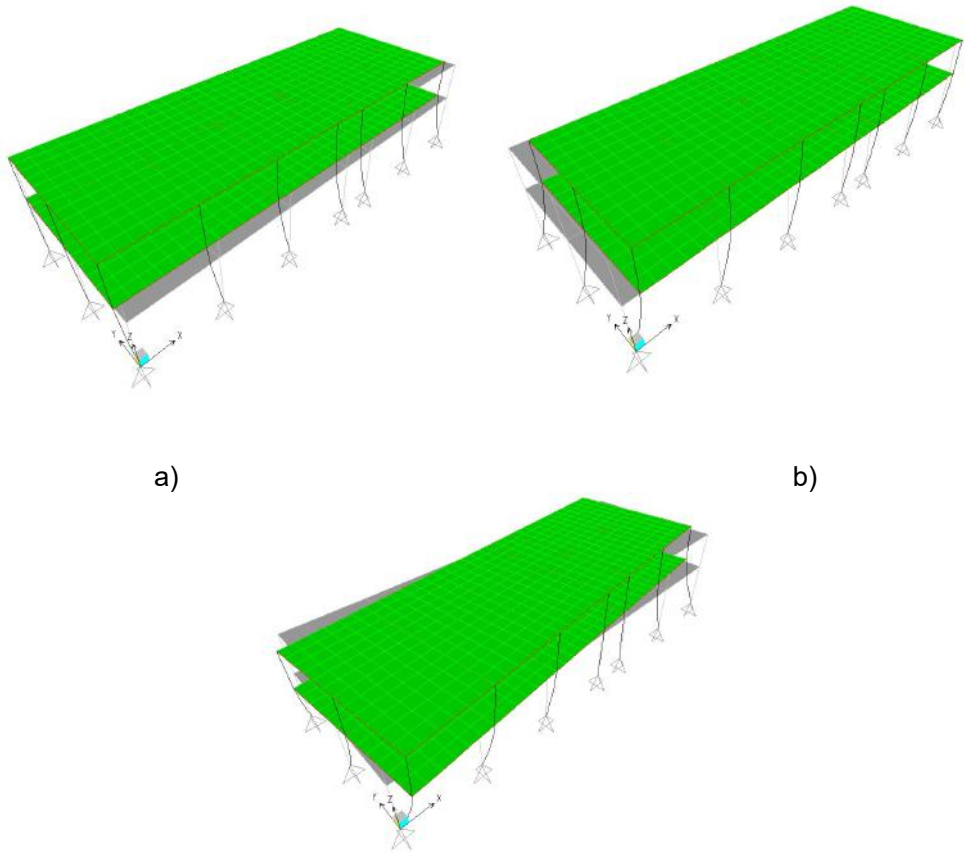

Figure 5-11. Mode shapes obtained as a result of the linear elastic analysis for model with the pinned supports: a) translational mode in X-direction; b) translational mode in Y-direction, and c) torsional mode.

5.3.1.3 Capacity evaluation of the existing building: seismic demand (D) and capacity (C)

The evaluation of seismic forces for the existing structure was performed in each horizontal direction of seismic loading (X and Y). The analysis was performed for all numerical models (with different base supports). The seismic base shear force was obtained as a sum of the support reactions at each column location. The results are summarized in *Table 5-5*. The ratio of seismic base shear force and total seismic weight (ΣQ=1360 t), $S_{x/y}/\Sigma Q$, is also shown in the table. It can be seen that the seismic base shear value is highest for the model with isolated footings, and lowest for the model with pinned supports.

Table 5-5. Seismic base shear for different numerical models

Base Supports	S_x (tonf)	$S_x/\Sigma Q$	S_y (tonf)	$S_y/\Sigma Q$
Pinned	717.79	0.53	684.91	0.50
Fixed	807.47	0.59	796.53	0.59
Isolated footing	823.96	0.61	814.03	0.60

The evaluation of seismic forces presented here is related to the model with pinned base support conditions. Frame 1 was considered as a typical frame in longitudinal (X) direction, and the elevation is shown in Figure 5-12a). Frame B was considered as a typical frame in

transverse (Y) direction, and the elevation is shown in Figure 5-12b). The internal forces in each frame obtained from the Spectral Method analysis are termed Demand **D**. The following internal forces were determined: bending moment M3, axial force N, and shear force V2. The capacities of beam and column sections for bending M_{ult} and shear Q_{ult} are termed Capacity **C**. These capacities were calculated according to СНиП 52-01-2003 provisions for the Limit States Design Method. A summary of **C** and **D** values at the selected sections are presented in Tables 5-6 and 5-7. A Capacity/Demand (**C/D**) ratio reflects the ability of a structural element to resist seismic demand (based on the evaluation at a specific location). The sections with C/D ratios for bending and/or shear of less than 1.0 are deemed to be deficient. It can be seen that the bending and shear capacities are significantly deficient for most beam and column sections (**C/D** ratio is less than 1.0, see the values shown in bold).

It should be noted that the structure was analyzed by ignoring the effect of welded beam-to-column connection. It was assumed that the connection capacity is higher than the beam flexural capacity. However, it is expected that if the capacity of the connection was considered, **C/D** ratio values for the beams would be less than the current values.

It is important to understand the process for connecting the precast RC members, which occurs during the building assembly. Precast RC structures should be easy to construct. The connections should be strong, rigid, and durable, as required by design. It is desirable to minimize the use of steel.

Beam-to-column connections can be rigid or pinned (hinged). The most rigid connections are produced either by connecting free lengths of longitudinal reinforcing bars welded together (with covers or by tub welding), or by connecting longitudinal reinforcement through inserts. Welding of support inserts only (without welding of top principal reinforcement in a beam) produces a pinned beam-to-column connection. After the reinforcement has been connected, the connections are grouted and the gaps between the members are filled with chipped concrete.

RC column connections can be also achieved by means of tub welding of longitudinal reinforcement, which is followed by grouting. Centering beds of steel or concrete are designed to transfer load along the column axis more precisely.

Electric arc welding is used to connect reinforcement during the assembly. However, if the diameter of welded bars is greater than 20 mm, it is possible to use tub welding made in standard (copper) molds. Electric arc welding with round covers is used, when the bar diameter is less than 20 mm.

Capacity of the welded beam-column connection can be determined according to the standards ГОСТ10922-2012 and ГОСТ 14098-91.

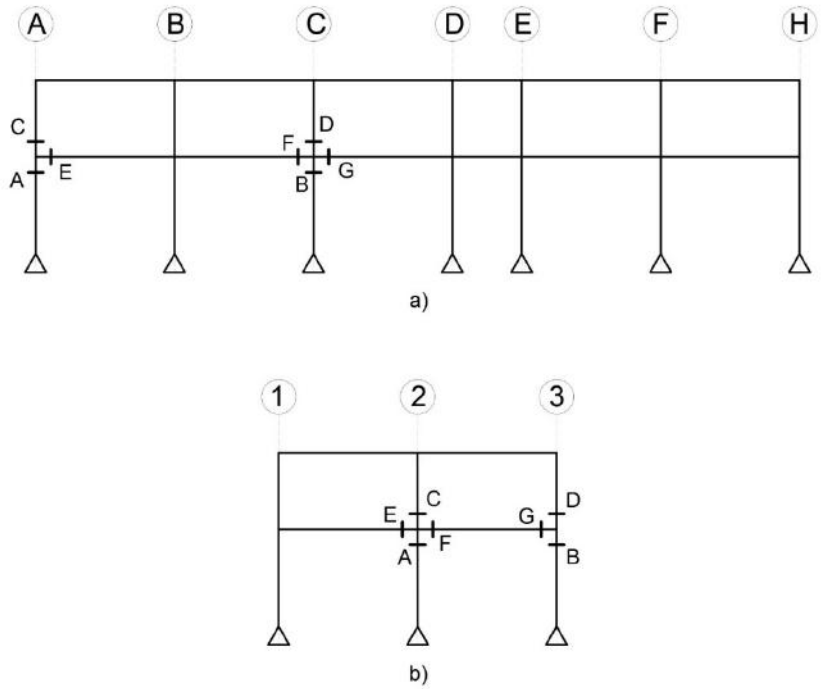

Figure 5-12. Reference frames for seismic evaluation of the existing building: a) Frame 1 and b) Frame B.

Table 5-6. Seismic demand D and capacity C for the Existing Building: Frame 1 in Longitudinal (X) Direction

Joint	Demand D: internal forces from analysis			Capacity C (СНиП)		Capacity/Demand (C/D)	
	M3 (t·m)	N (t)	V2 (t)	M_{ult} (t·m)	Q_{ult} (t)	Bending	Shear
A	111.76	-8.06	30.33	20.55	28.65	**0.18**	**0.94**
B	126.45	-54.96	34.32	27.22	28.65	**0.22**	**0.83**
C	23.68	-4.56	6.33	20.31	28.65	**0.86**	4.53
D	8.19	-25.56	18.88	23.55	28.65	2.88	1.52
E	84.87	0.11	40.08	14.96	36.97	**0.18**	**0.92**
F	67.15	0.11	34.79	14.96	36.97	**0.22**	1.06
G	65.08	0.11	33.17	14.96	36.97	**0.23**	1.11

Table 5-7. Seismic demand D and capacity C for the Existing Building: Frame B in Transverse (Y) Direction

Joint	Demand D: internal forces from analysis			Capacity C (СНиП)		Capacity/Demand (C/D)	
	M3 (t·m)	N (t)	V2 (t)	M_{ult} (t·m)	Q_{ult} (t)	Bending	Shear
A	156.35	-98.30	42.43	29.15	28.65	**0.19**	**0.68**
B	126.38	-4.63	34.42	20.32	28.65	**0.16**	**0.83**
C	31.17	-51.36	37.59	26.87	28.65	**0.85**	**0.76**
D	14.84	-13.15	9.99	21.65	28.65	1.46	2.87
E	84.64	0.15	41.56	14.96	36.97	**0.18**	**0.89**
F	84.55	0.15	41.49	14.96	36.97	**0.18**	**0.89**
G	103.13	0.14	41.68	14.96	36.97	**0.15**	**0.89**

5.3.1.4 Displacements

Interstory seismic displacements for each horizontal direction (X and Y) at each floor level were obtained from the analysis. These displacements were compared with the limits set by paragraph 5.4.3 of СНиП КР 20-02:2009.

The СНиП КР 20-02:2009 interstory displacement limit between the roof and first floor level can be calculated as follows

$$\Delta_k = h_k * K_2 * \varepsilon = 3300 * 0.3 * 0.02 = 19.8 \text{ mm}$$

where:

h_k = 3300 mm is floor height,

K_2 = 0.30 a reduction coefficient that depends on the type of structural system (Table 5.4 of SNiP KR 20-02: 2009), and

ε = 0.02 since there is a separate action of loadbearing and nonloadbearing structure due to seismic effects (masonry partition walls are isolated from the frame).

The results are summarized in *Table 5-8*. It can be seen that the СНиП КР 20-02:2009 displacement limits have been exceeded for all models.

Table 5-8. Seismic Interstory Displacements for the Existing Building: Spectral Method

Base Supports	Level	Displacements		СНиП КР 20-02:2009 Displacement Limits	Difference	
		Δ_{kX} (mm)	Δ_{kY} (mm)	Δ_{max} (mm)	X-direction (mm) (% exceedance)	Y-direction (mm) (% exceedance)
Pinned	Roof	23.8	27.6	19.8	+4.0 (+20.2%)	+7.8 (+39.3%)
	Level 1	154.3	157.8	24.7	+129.6 (+525%)	+133.1 (+539%)
Fixed	Roof	21.6	24.8	19.8	+1.8 (+9.1%)	+5.0 (+25.3%)
	Level 1	45.3	47.6	24.7	+20.6 (+83.4%)	+22.9 (+92.7%)
Isolated Footing	Roof	23.7	27.9	19.8	+3.9 (+19.7%)	+8.1 (+40.9%)
	Level 1	77.8	81.7	24.7	+53.1 (+215%)	+57.0 (+231%)

5.3.2 Nonlinear static (pushover) analysis

Nonlinear static (pushover) analysis was performed for 2-D representative frames to show an alternative analysis method which is currently not included in СНиП КР 20-02:2009, but can be used both for seismic evaluation of existing buildings and seismic performance assessment of various retrofit schemes. The pushover analysis is explained in Section 2.5.4.

This section discusses input for the pushover analysis and the key results. It should be noted that the pushover analysis, as performed in this study, did not take into account torsional effects. However, the analysis results are useful for studying failure mechanisms in the existing and retrofitted building.

5.3.2.1 Numerical models for the pushover analysis

Pushover analysis was performed on two-dimensional (2-D) models: Frame 1 was analyzed as a typical model for longitudinal (X) direction, while Frame B was analyzed as a typical model for transverse (Y) direction. These frames are shown in Figure 5-9. Model properties (geometry, cross-sections, and materials) are the same as for linear analysis (see Section 5.2). Nonlinear characteristics of the frame members for the pushover analysis are explained next.

5.3.2.2 Plastic hinge properties for beam and column sections

Plastic hinges are critical sections within the structure at which inelastic deformations develop during the pushover analysis. In case of a frame structure, there are plastic hinges for beams and columns. Plastic hinges for the beam sections are i) flexural (bending moment) and ii) shear. Plastic hinges for the column sections are i) axial load plus bending and ii) shear.

A plastic hinge is characterized by forces and the corresponding deformations which determine nonlinear behavior at the hinge location under increasing monotonic loading until the failure. Flexural (bending) hinges are characterized by moment capacities versus rotations. Shear hinges are characterized by shear capacities and very small (negligible) displacements. Conceptual plastic hinge characteristics are shown in *Figure 5-13*.

Moment and shear capacities for the hinges were determined from СНиП 52-01-2003 provisions for the Limit States Design Method. The following assumptions were taken while determining the hinge properties:

1. Normative values of concrete and steel strengths were used for the analysis (note that some international codes recommend average values).
2. A constant level of gravity load was taken for column hinge properties – as opposed to moment versus axial force interaction curve. The magnitude of axial load depends on the floor level.

Each plastic hinge is associated with the three performance levels: Immediate Occupancy (IO), Life Safety (LS), and Collapse Prevention (CP). These performance levels were defined by specifying deformation values (rotations or displacements). Refer to Section 2.5.2 for a description of performance levels. For this study, deformation limits associated with the IO, LS, and CP performance levels were adopted from ASCE/SEI 41-13 (ASCE 2014). Note that the ASCE/SEI 41-13 values were determined mostly based on the US experimental studies, which focused on specimens which were representative of the US construction practice. It is acknowledged that the values for RC structures from the KR may be different, but the ASCE/SEI 41-13 values were used due to a lack of relevant experimental data related to the local building typologies.

Plastic hinge properties for beams in Frame 1 (moment and shear) are presented in *Figure 5-14* . Plastic hinge properties for columns depend on the axial force level. The effect of axial force on moment hinge properties can be seen in *Figure 5-15*. Flexural capacities are higher for the columns at the first floor (ground floor) level (*Figure 5-15*a) than the top floor level columns (*Figure 5-15*b). Shear hinge properties for the columns are presented in *Figure 5-16*. Note that the bending moment and shear capacities for RC columns and beams were determined according to СП 63.13330.2012.

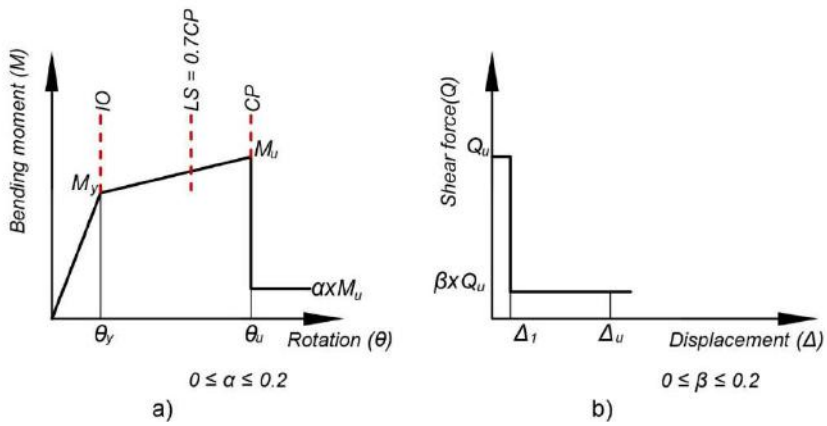

Figure 5-13. Conceptual plastic hinge characteristics: a) moment, and b) shear.

Length of plastic hinges for RC beams and columns was taken as 0.5**h*, where *h* is the overall depth of specific beam/column. It was assumed that the plastic hinges in the beams were located at a distance *h* from the beam-column joint, while plastic hinges in the columns were located at distance *h/2* from the beam-column joint (see *Figure 5-17*).

It is acknowledged that there are different recommendations regarding the plastic hinge length and location within a beam or column. The selected values were deemed appropriate for this case study, in the absence of experimental data specific for Series IIS-04 frame structures.

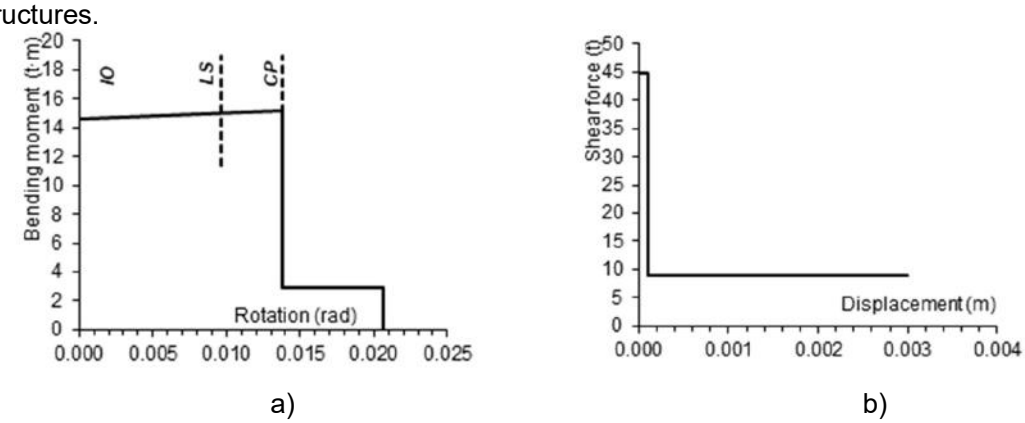

Figure 5-14. Beam hinge properties for Frame 1: a) moment hinge (BH-M3), and b) shear hinge (BH-V2).

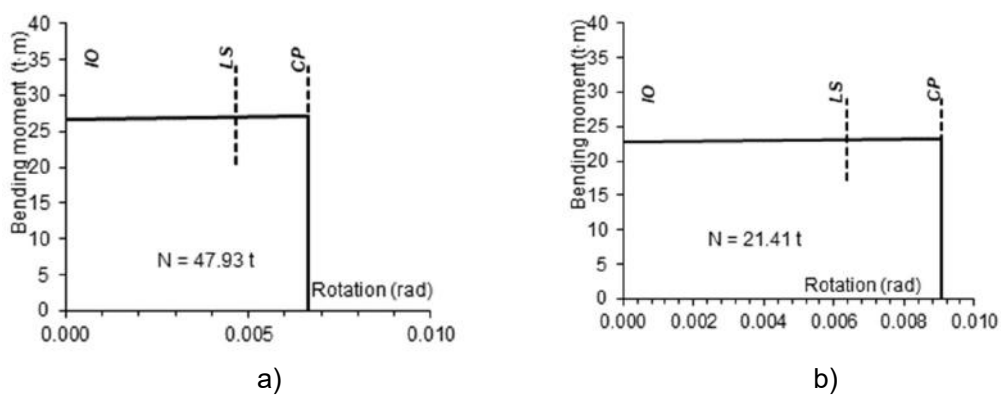

Figure 5-15. Column hinge properties for Frame 1: a) moment hinge at the first floor level CH-M3(L1), and b) moment hinge at roof level CH-M3(RL).

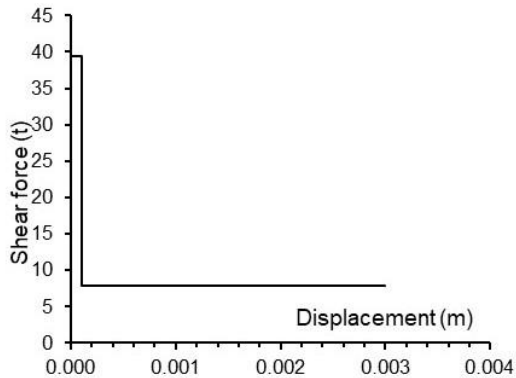

Figure 5-16. Column shear hinge properties for Frame 1 (CH-V2).

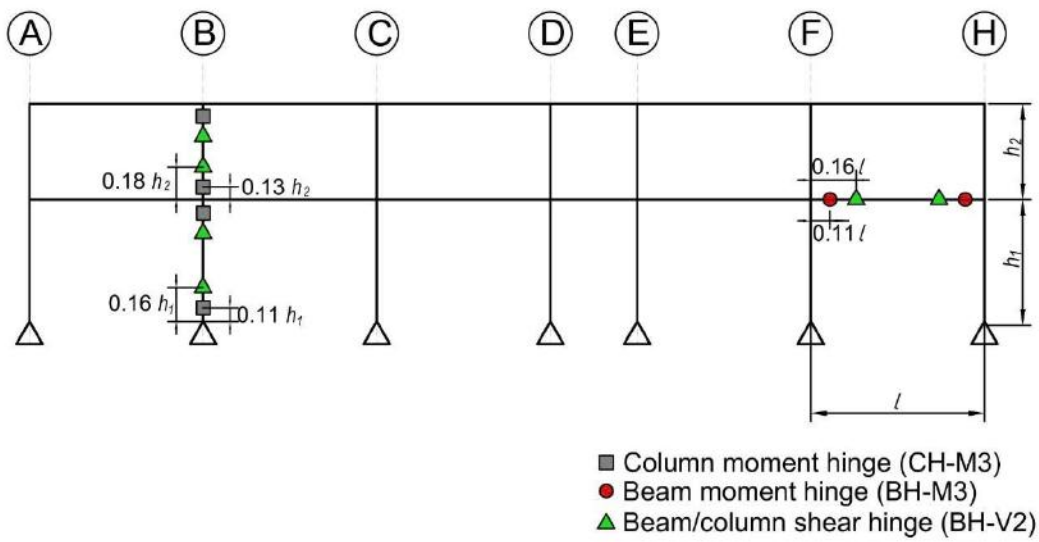

Figure 5-17. Typical plastic hinge locations for Frame 1 – existing building.

5.3.2.3 Load patterns for pushover analysis

It is recommended to use at least two load patterns for the pushover analysis (see Section 2.5.4.2 and Figure 2-10). The following two load patterns were considered in the study: 1) LP1- inverse triangular, and 2) LP2- uniform, see *Figure 5-18*. It should be noted that uniform load pattern disregarded the load below the lower half of the first floor height.

Each frame model was subjected to the gravity load which was determined based on the tributary weight. Gravity load was determined taking into account component loads according to Table 5.2 of СНиП КР 20-02:2009 (see Section 5.3.1.1).

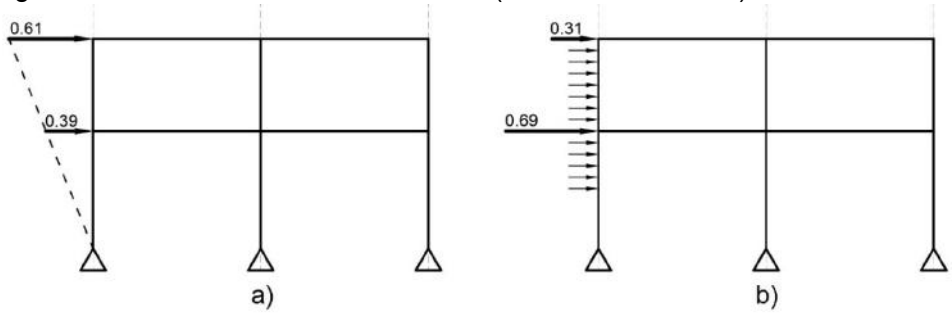

Figure 5-18. Load patterns for pushover analysis: a) LP1 – inverse triangular, and b) LP2 - uniform.

5.3.2.4 The results of pushover analysis

The pushover analysis was performed on two 2-D frame models that were initially subjected to gravity loading. Two load patterns were used to apply lateral loading, as discussed above. The structure was subjected to incrementally increasing lateral displacements, as illustrated in *Figure 5-19*.

The structure was subjected to increasing lateral displacement until the target displacement had been reached. The target displacement was calculated based on ASCE/SEI 41-13 (ASCE 2014). Unit values of the modification factors C_0, C_1, C_2, and C_3 have been assumed, hence these factors have been omitted from the equation. It is essentially a spectral displacement corresponding to the design spectral acceleration (from СНиП КР 20-02:2009) for a given fundamental period. The equation is as follows:

$$\delta_t = S_a(T_i) \cdot T_i^2 \Big/ \left(4\pi^2\right)$$

Where T_i is fundamental period of the structure for X or Y direction, and $S_a(T_i)$ is spectral acceleration corresponding to period T_i. Note that the value was divided by K_2 = 0.3 (because the elastic spectra was used for the calculation).

For the existing building, the following values of target displacement have been calculated:

X-direction: $\delta_{tx} = 557$ mm for $T_i = 1.115$ sec and $S_a(T_i) = 5.30$

Y-direction: $\delta_{ty} = 575$ mm for $T_i = 1.153$ sec and $S_a(T_i) = 5.12$

On the other hand, СНиП КР 20-02:2009 prescribes the maximum permitted elastic lateral displacement for the building (see Section 5.3.1.4):

$$\Delta_{total} = h_{total} * K_2 * \varepsilon = 7420 * 0.3 * 0.02 = 44.5 \text{ mm}$$

Since the above displacement has been reduced by applying coefficient K_2, it is possible to obtain the maximum permitted total displacement which takes into account nonlinear behavior as follows:

$$\Delta_{nonlin} = \Delta_{total} / K_2 = h_{total} * \varepsilon = 7420 * 0.02 = 148.4 \text{ mm}$$

The main output of the analysis is a Capacity Curve (CC), which shows base shear force and the corresponding lateral displacement. Lateral displacement is monitored at the Control Node which is located at the roof level (see *Figure 5-19*). The CC for Frame 1 is shown in *Figure 5-20*, while the CC for Frame B is shown in *Figure 5-21*. Each chart shows two CCs – one for each load pattern (LP1 and LP2). It can be seen that LP2 is more critical for both frames, because it gives lower inelastic forces and displacements at failure than LP1. The CCs indicate a brittle behavior of the frame structures, because there is a significant drop in the capacity after the maximum base shear has been reached (shown as black circle on the charts). It can be also observed that the maximum base shear force capacity corresponds to lateral displacements of 62 mm (Frame 1) and 83 mm (Frame B). These displacements are significantly smaller than the target displacements (557 and 575 mm for X- and Y-direction respectively), and the maximum permitted nonlinear displacement according to СНиП КР 20-02:2009 (148 mm). It can be concluded that the structure is expected to fail at the displacements which are a fraction of the target displacements which were determined based on СНиП КР 20-02:2009 (557 and 575 mm for X and Y direction respectively).

Pushover analysis also provides an opportunity to observe possible failure mechanisms for the structure under consideration. A deformed shape for Frame 1 at the displacement

corresponding to the maximum base shear (*Figure 5-20*) is shown in *Figure 5-22*a). It can be seen that the flexural plastic hinges at the top of ground floor columns experienced high rotations corresponding to the LS performance, and one hinge at the CP performance level (close to collapse). At the same time, flexural plastic hinges in the beams were at the IO performance level. This is an example of undesirable seismic behavior of moment resisting RC frames, which could lead to the building collapse at the ground floor level. This behavior can be classified as "weak column-strong beam" mechanism, which is discussed in Section 3.6.1.3 and illustrated in Figure 3-24a). Frame B showed a similar failure mechanism, as illustrated by its deformed shape (*Figure 5-22*b).

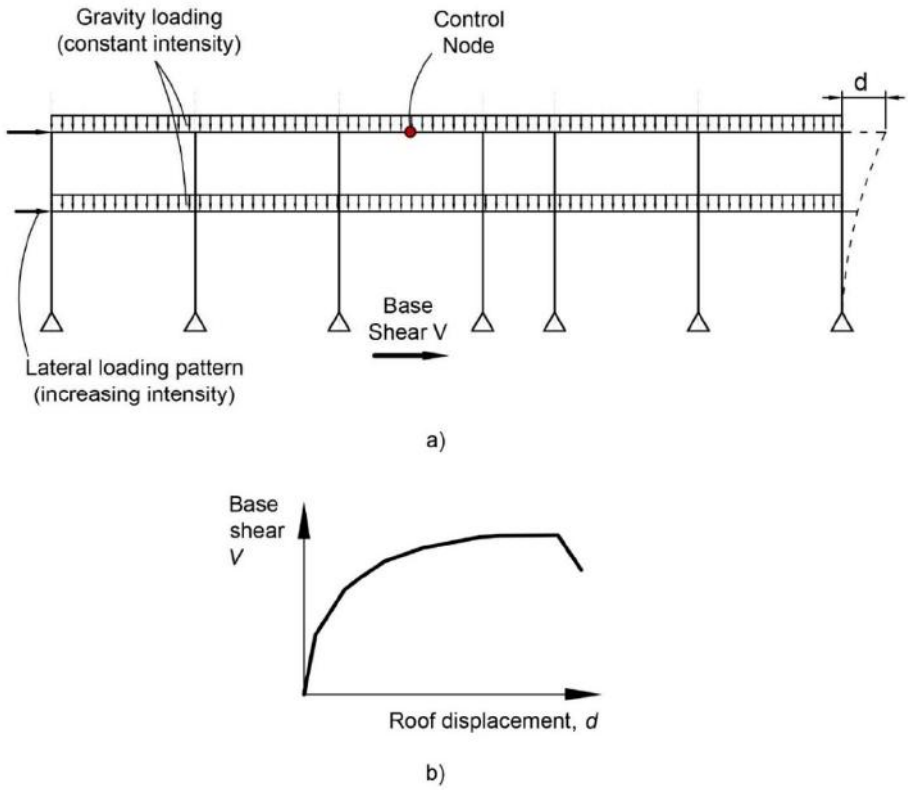

Figure 5-19. Conceptual numerical model and a Capacity Curve obtained as an output from the pushover analysis.

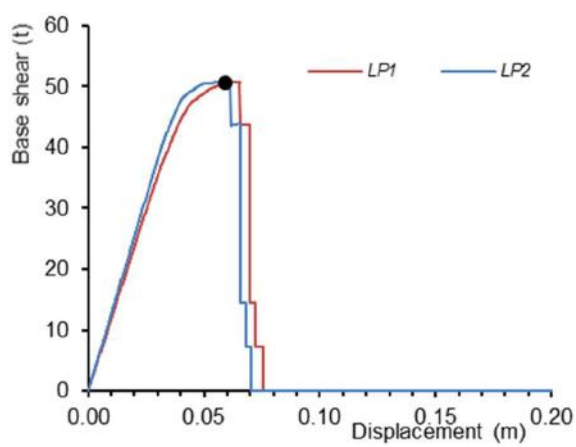

Figure 5-20. Capacity Curve for Frame 1 (LP2: maximum force 50.96 t and the corresponding displacement 62 mm).

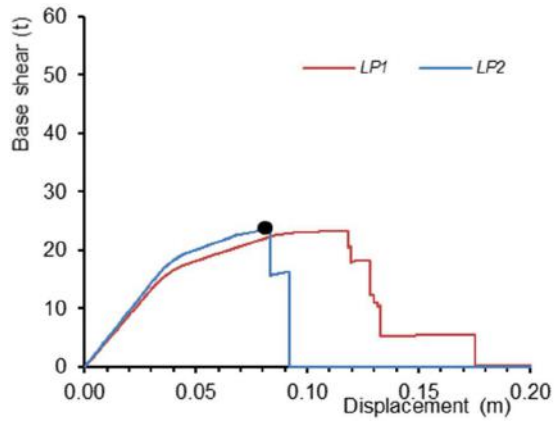

Figure 5-21. Capacity Curve for Frame B (LP2: max force 23.65 t max and the corresponding displacement 83.4 mm).

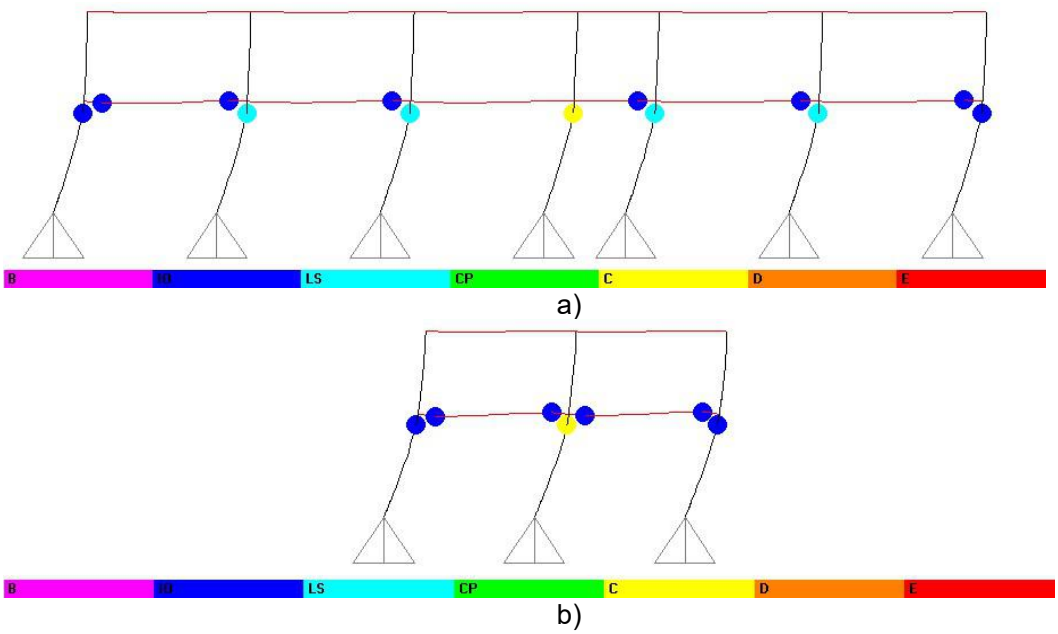

Figure 5-22. Deformed shape for load pattern LP2 at the maximum shear capacity (labelled with black solid circle on the capacity curves): a) Frame 1 (displacement 62 mm), and b) Frame B (displacement 83 mm).

5.3.3 Effect of the welded beam-to-column connection on nonlinear behavior and failure mechanism of RC frames (pushover analysis)

The RC frame structure under consideration has a welded connection at the beam-column interface, as discussed in Section 5.1 (see Figure 5-5). However, the effect of welded connection was not taken into account in the seismic analyses performed elsewhere in this chapter. It has been assumed that the welded connection is not critical for the seismic evaluation and retrofit of this structure, which may not be entirely correct. For that reason, a parametric study was performed to examine the effect of welded connection on the nonlinear seismic behavior of the RC frame, and the results are presented in this section.

5.3.3.1 Capacity of the welded beam-column connection

It is assumed that the welded connection has a brittle seismic behavior. The flexural capacity of the connection depends on the weld capacity, and it can be calculated according to ГОСТ10922-2012 and ГОСТ 14098-91.

The basic assumption is that the flexural capacity of welded connection is the same as the flexural capacity of the RC beam. This is a common practice for the design of prefabricated structures, where the connections are designed to be at least as strong as the connected structural elements. The basic flexural capacity of the connection will be denoted as M_u. An alternative model with the flexural capacity by 30% higher than M_u (1.3 x M_u) was also considered to evaluate the effect of potential connection overstrength (compared to a monolithic structure). Finally, a model with the flexural capacity which is by 30% less than M_u was also considered, to account for possible welding flaws during the construction (0.7 x M_u).

5.3.3.2 Beam plastic hinge properties for the pushover analysis

Two types of plastic hinges have been considered in the analysis: BH-M3 and BH-MW. Flexural hinge for RC beam sections with ductile moment-rotation properties is referred to as BH-M3 (this hinge type was used for nonlinear analyses elsewhere in this chapter).
It has been assumed that the welded connection has a brittle behavior, and that it fails immediately after the ultimate flexural capacity (M_u) has been reached. The connection fails at zero chord rotation (a “force-controlled” flexural hinge). This hinge type is called BH-MW.
It has been assumed that M_u value for the welded connection hinge (BH-MW) is the same as the moment at the onset of yield (M_y) for the RC beam hinge (BH-M3). Therefore, plastic hinges for RC beam section and the welded connection have similar flexural capacity, but the difference is in nonlinear (post-yield) behavior. Displacement-based hinge model was used for the RC beam section (BH-M3) (Figure 5-23a) and a force-based hinge model for the welded beam connection (BH-MW) (Figure 5-23b).
.

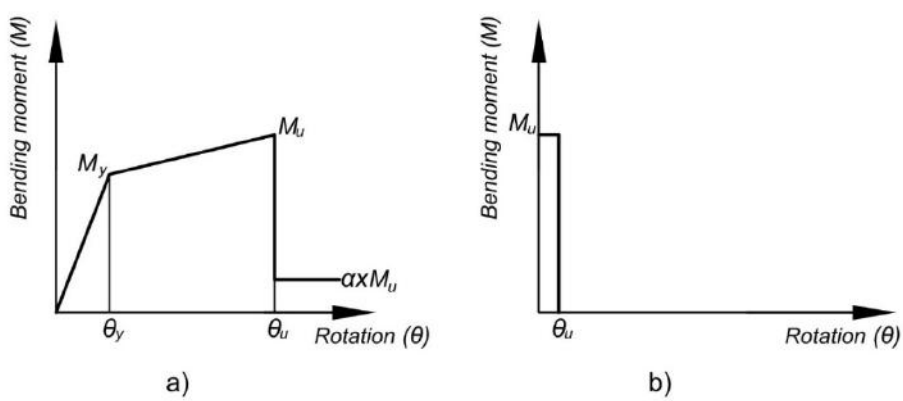

Figure 5-23. Flexural plastic hinges for the beam: a) Hinge BH-M3 for RC beam section (outside the connection) and b) hinge BH-MW simulating the behavior of a welded connection.

5.3.3.3 Numerical models

The following three basic numerical models for the beams have been considered in this study (see *Figure 5-24*):

1) Model 1 – this model was used for all seismic analyses in Chapter 5. The effect of welded connection has been ignored, and two flexural plastic hinges type BH-M3 are located at the beam ends. This is a reference model for the study.

2) Model 2 – this model has the flexural hinges at the same locations as Model 1, but the properties of welded connection hinge BH-MW are used instead of BH-M3. The purpose of this model is to examine the effect of location for the welded connection hinge (the distance from the beam end to the hinge is 0.11 x beam length) – same as hinge BH-M3 in Model 1.
3) Model 3 – this model has two types of flexural hinges at each beam end: BH-M3 (at the same location as Models 1 and 2) and BH-MW (located at the column exterior face, 200 mm from the column centerline). The purpose of this model is to study the effect of welded connection on nonlinear frame response in the situation where RC beam sections show nonlinear seismic response. In order to evaluate the effect of welded connection capacity on the behavior, the following 3 flexural capacity options were considered in Model 3: a) 0.7 x M_u, b) M_u, and c) 1.3 x M_u.

Shear hinge locations and properties are same in all models. The effect of shear capacity of the welded connection on the nonlinear response has not been considered. Figure 5-24 shows numerical models for a typical beam span (between the adjacent columns).

Nonlinear static (pushover) analysis was performed for Frame 1 and Frame B (the same 2-D frames were considered in Section 5.3.2). In this section the results are presented mostly for Frame 1 analysis. It should be noted that the analysis for Frame 1 considered the effect of gravity load which was applied before the nonlinear analysis. It was assumed that floor slabs transfer gravity load only to longitudinal frames, hence Frame B was subjected mostly to lateral loading.

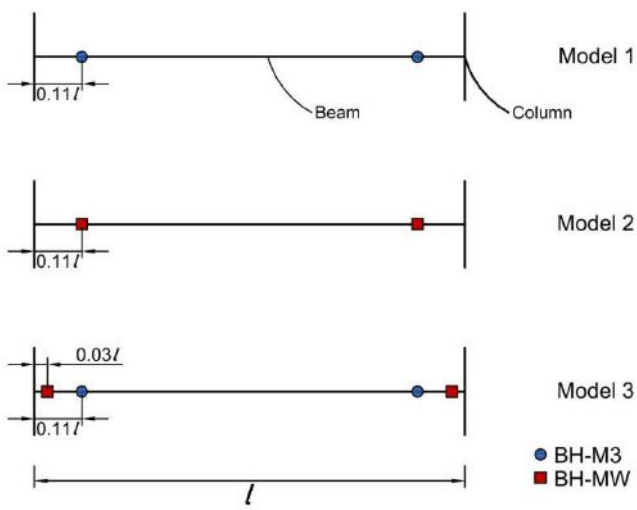

Figure 5-24. Numerical models for the RC beams in frames with different moment hinge properties (hinge BH-M3 is ductile and hinge BH-MW is brittle).

5.3.3.4 Results

The effect of a brittle welded connection

The effect of brittle behavior of welded connection was studied through a comparison of Model 1 versus Model 2. It was assumed that the flexural capacity of the connection is similar in both models, however Model 2 assumes brittle behavior of the welded connection. It can be seen from the capacity curves shown in *Figure 5-25* that Model 2 shows elastic-brittle behavior. The behavior is elastic until the maximum shear capacity has been reached (43.75 t) at the displacement of 0.035 m. In comparison, Model 1 shows nonlinear behavior after the yielding of plastic hinges had taken place. The shear capacity of Model 1 drops after reaching the maximum value at 50.96 t (at the displacement of 0.062 m). Model 2

reaches the maximum shear capacity at the displacement of only 0.035 m, which is significantly less than the corresponding displacement of 0062 m for Model 1.

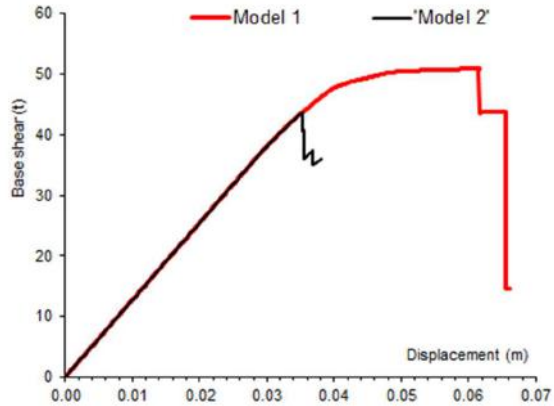

Figure 5-25. Capacity curves for Frame 1: Model 1 and Model 2.

It is also important to observe that the failure mechanism for Frame 1 is significantly different for Models 1 and 2. Model 1 with monolithic beam-column connection develops plastic hinges both in the beams and the columns, however the failure takes place in a column (noted as collapse C). However, Model 2 develops most plastic hinges in the beams, and the failure also takes place in the beams (collapse state C); this is illustrated by *Figure 5-26*. Therefore, a presence of brittle welded beam connections results in different failure mechanisms compared to a frame structure with monolithic connections.

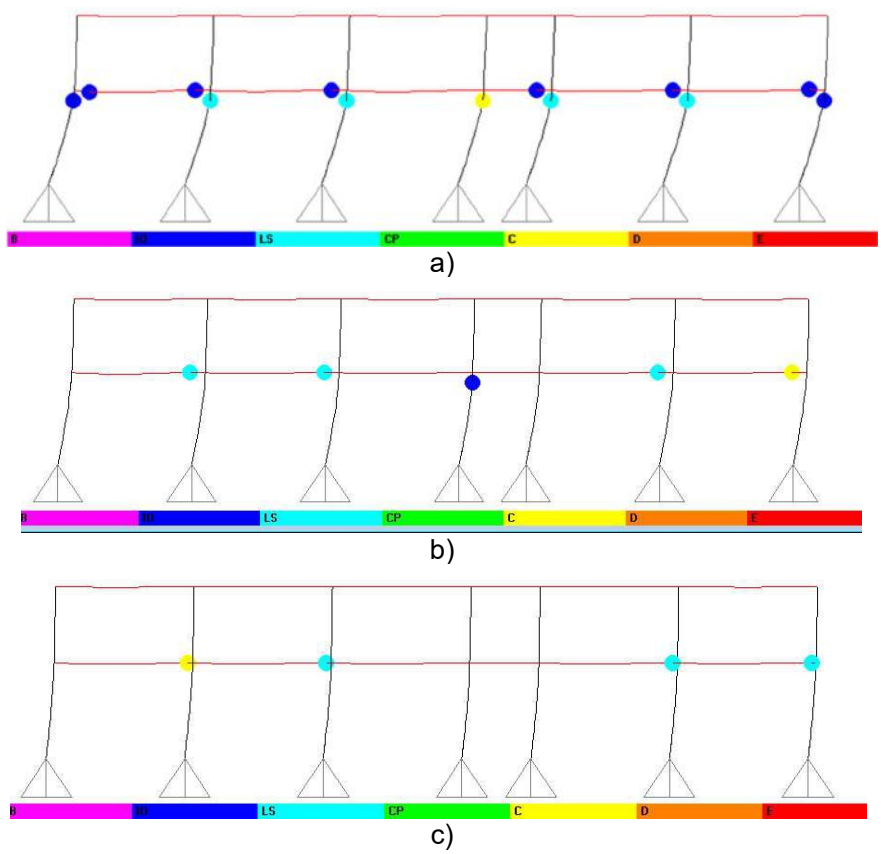

Figure 5-26. Deformed shapes for load pattern LP2 at the maximum shear capacity: a) Model 1; b) Model 2, and c) Model 3.

The effect of hinge location

As discussed earlier, Model 2 simulates the effect of a brittle hinge connection, but the hinge location is same as for Model 1 (which simulates plastic hinge in a monolithic frame structure). Plastic hinge in Model 3 is located closer to the beam-column intersection (at 200 mm distance from the column centerline). As a result, the maximum shear capacity of Model 2 is higher than Model 3 (see *Figure 5-27*), but the behavior remains elastic up to the maximum capacity and culminates in a brittle failure. Plastic hinges in Model 2 are located further away from the column centerline, hence bending moments are significantly smaller than Model 3 (due to high moment gradient at the beam ends).

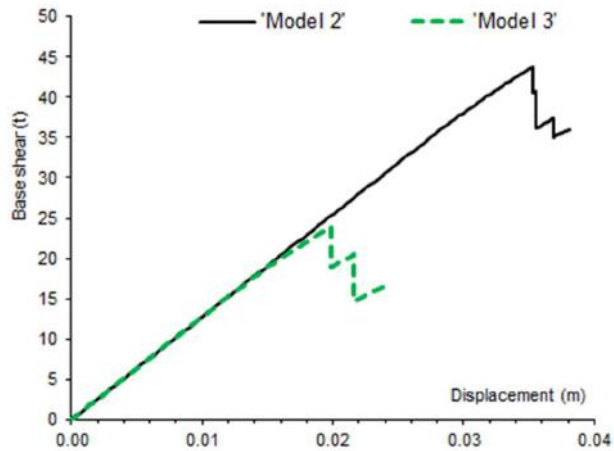

Figure 5-27. Capacity curves for Frame 1: Model 2 and Model 3.

The effect of the welded connection's flexural capacity

Since the value of flexural capacity for the welded beam-column connection is uncertain due to a limited knowledge of the weld details, it has been considered appropriate to vary flexural capacity for the plastic hinge BH-MW in the numerical models. The hinge location was kept the same as in Model 3 (at the column face), but the capacity was varied from 0.7 to 1.3 times the RC beam's flexural yield resistance (M_y). The capacity curves for Model 3 (for 3 different flexural capacities), and Model 1 (as a reference) are shown in *Figure 5-28*. It can be seen that Model 3 shows brittle behavior in all cases, but (as expected) the capacity is highest for the model with the maximum flexural capacity for plastic hinge BH-MW (1.3 x Model 3). In all cases, flexural plastic hinges develop first in the beams and the failure occurs in the beams (similar to *Figure 5-26*c).

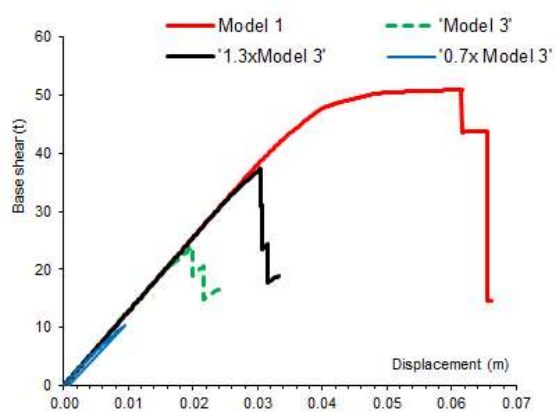

Figure 5-28. Capacity curves for Frame 1: Model 3 (basic – 100% M_u), 0.7 x Model 3 (0.7 x M_u), and 1.3 x Model 3 (1.3 x M_u).

The effect of gravity loading

The results presented in this section are mostly related to Frame 1 (longitudinal direction). The results for Frame B (transverse direction) are generally similar, but note that Frame B was not subjected to gravity loading. The analysis of Models 2 and 3 with a welded beam connection has shown that the maximum shear capacity for Model 2 is 18.02 t at the displacement of 0.039 m, while for Model 3 the maximum shear capacity is 15.16 t at the displacement of 0.033 m (see *Figure 5-29*). A drop in the capacity between Models 2 and 3 is about 16% for Frame B, while the corresponding difference for Frame 1 is as high as 45% (see *Figure 5-27*).

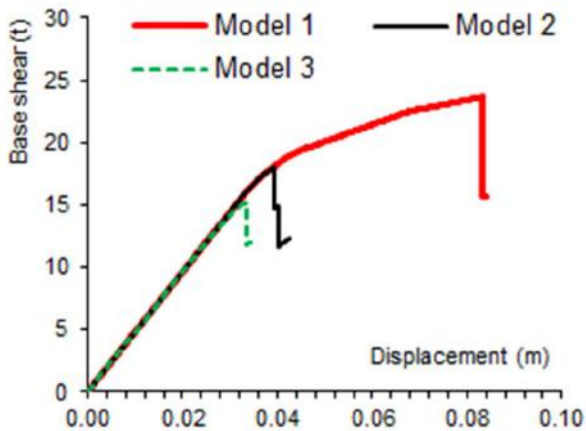

Figure 5-29. Capacity curves for Frame B: Model 2 and Model 3.

5.3.3.5 Conclusions

Based on the results of the parametric study presented in this section, it can be concluded that the presence of welded beam-column connection influences both the capacity and the mechanism of failure of RC frames. However, since the existing structure is significantly deficient in terms of the capacity/demand ratio compared to the requirements of current seismic codes, a general conclusion regarding the seismic adequacy of the existing structure remains the same for monolithic and welded beam-column connection.

It is expected that the presence of welded beam-column connections would also influence the mechanism of failure for the retrofitted structure. The influence is expected to be more significant for retrofit schemes which result in the same failure mechanism as the existing structure (e.g. RC jacketing), but it would be less significant for the retrofit schemes with a different failure mechanism (e.g. addition of new RC shear walls).

5.4 Seismic Retrofit Schemes

The following three seismic retrofit schemes were considered in this case study:

1) RC jacketing of existing columns (RS1),
2) RC jacketing of existing columns plus new steel braces (RS2), and
3) New RC shear walls (RS3).

Both linear and nonlinear seismic analyses were performed for the retrofitted structure. The following sections contain the most important analysis results and discuss design and construction of these retrofit schemes. However, the first two retrofit schemes (RS1 and RS2) were not able to increase C/D ratio at critical sections to 1.0 or higher. Displacements were also not reduced to the maximum limit permitted by СНиП КР 20-02:2009. Only the third retrofit scheme (RS3) was successful in increasing both the capacity and at the same time in reducing the displacements of the existing structure.

5.5 Retrofit Scheme 1 (RS1): RC Jacketing of Existing Columns

5.5.1 An overview of the retrofit scheme

The proposed retrofit scheme RS1 consists of constructing new 100 mm thick RC jackets for all columns (in both directions), as shown in *Figure 5-30*. The jackets need to be provided continuously up the building height. As a result, it is required to drill through the floor slab to ensure continuity of longitudinal reinforcement. Some of the existing column footings may need to be strengthened due to increased capacity of the columns at the base of the building.

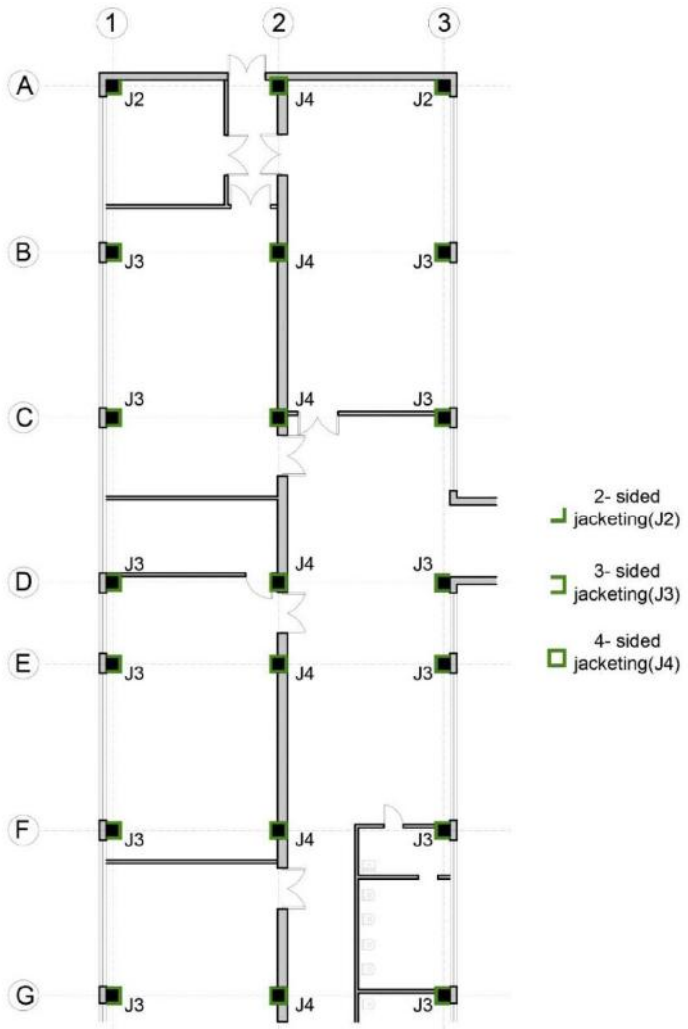

Figure 5-30. Floor plan of the retrofitted building for RS1: RC jacketing of columns.

5.5.2 Numerical model

Numerical model for this retrofit scheme is the same as the model used for the analysis of existing building, except for the properties of RC columns, which were modified to take into account jacketing (see *Figure 5-31*). It should be noted that the numerical model assumed 4-sided jacketing for all columns, although columns at the perimeter had 2- and 3-sided jacketing (see *Figure 5-30*).

A 3-D model of the retrofitted building is shown in *Figure 5-32*. 2-D equivalent frame models for Frame 1 and Frame B are shown in *Figure 5-33*.

Concrete and steel material properties for RC jackets are summarized in Tables 5-9 and 5-10.

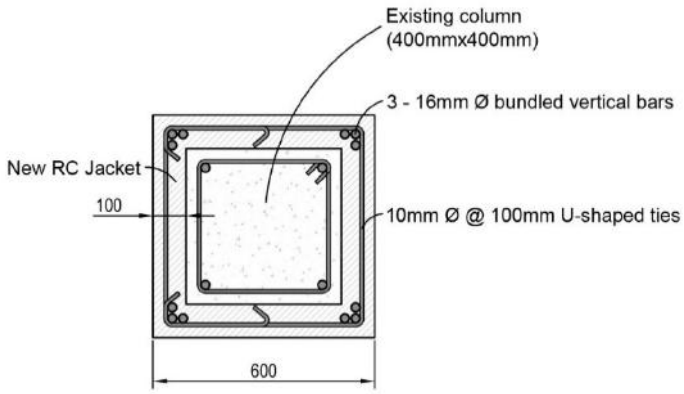

Figure 5-31. Retrofitted column with RC jacket (RS1): cross-section and reinforcement.

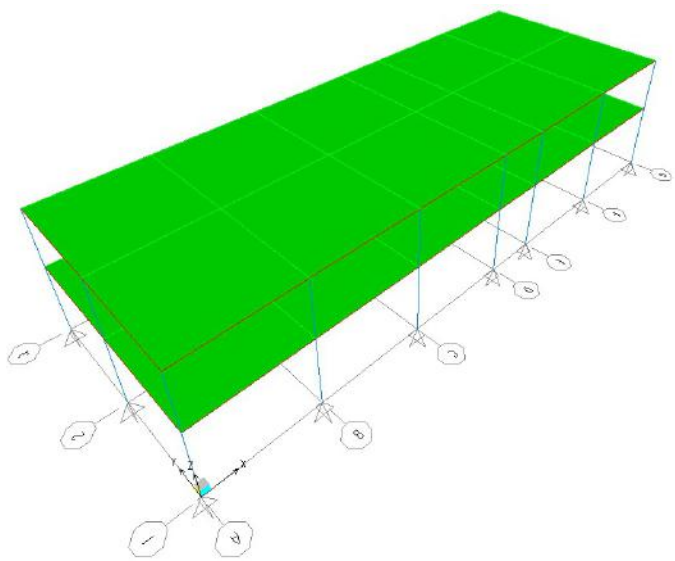

Figure 5-32. A 3-D numerical model of a retrofitted building with RC column jacketing (RS1).

Table 5-9. Concrete Properties: RC Jacketing
Concrete: Grade B30

No.	Property	Unit	Value
1	Modulus of elasticity	GPa	32.5
2	Design axial compression strength	MPa	22
3	Normative axial tensile strength	MPa	1.75
4	Mass density (2500 * 1.1)	kg/m^3	2750

Table 5-10. Steel Properties: RC Jacketing
Steel: Horizontal and vertical reinforcement Grade A-III

No.	Property	Unit	Value
1	Modulus of elasticity	t/m^2	2.0x10^7
2	Design tensile strength	t/m^2	37500

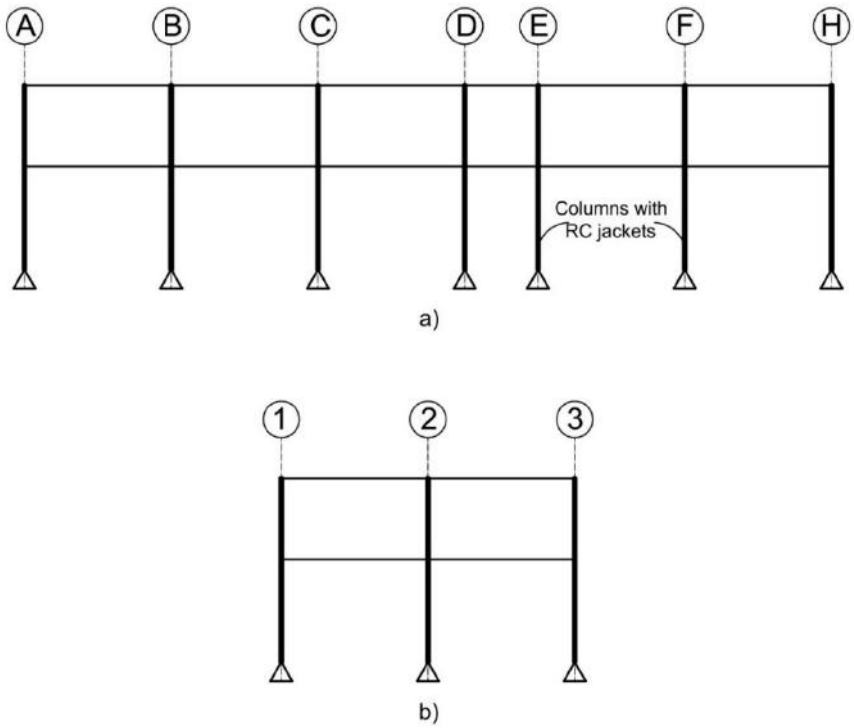

Figure 5-33. A 2-D numerical model of the retrofitted building (RS1): a) Frame 1 and b) Frame B.

5.5.3 Linear elastic analysis (Spectral Method)

5.5.3.1 Dynamic properties

Vibration periods for the existing and the retrofitted building are shown in *Table 5-11*. It can be seen that the retrofitted building is characterized by increased stiffness due to the RC jacketing. For example, fundamental period in Y-direction is 1.15 sec for the existing building and 0.71 sec for the retrofitted building.

Table 5-11. Vibration periods for the existing and the retrofitted building with RC column jacketing (RS1)

	Existing (pinned supports)	Retrofitted
Mode	Period (sec)	
1 (Y-dir)	1.153	0.709
2 (X-dir)	1.115	0.660
3	1.034	0.638
4	0.211	0.122
5	0.204	0.117
6	0.189	0.110
7	0.127	0.105
8	0.124	0.104
9	0.123	0.103
10	0.121	0.103
11	0.118	0.101
12	0.115	0.100

5.5.3.2 Capacity evaluation of the retrofitted building: seismic demand (D) and capacity (C)

The seismic forces were determined for Frame 1 in longitudinal (X) direction and Frame B in transverse (Y) direction (see Figure 5-34). Seismic demand (**D**) values were obtained from the linear elastic analysis. The beam and column capacities (**C**) were calculated according to СНиП 52-01-2003 provisions for the Limit States Design Method. It should be noted that the beam capacities are the same as for the existing building, while the capacities of column sections take into account RC jacketing. A summary of **C** and **D** values at the selected sections are presented in Tables 5-12 and 5-13. It can be seen that the bending and shear capacities for column sections are higher than for the existing building (see Tables 5-6 and 5-7); however, the capacities are still deficient for several sections (**C/D** ratio is less than 1.0, see the values shown in bold). It can be concluded that retrofit scheme RS1 is not effective in enhancing the lateral capacity of the existing building to the level required by СНиП КР 20-02:2009.

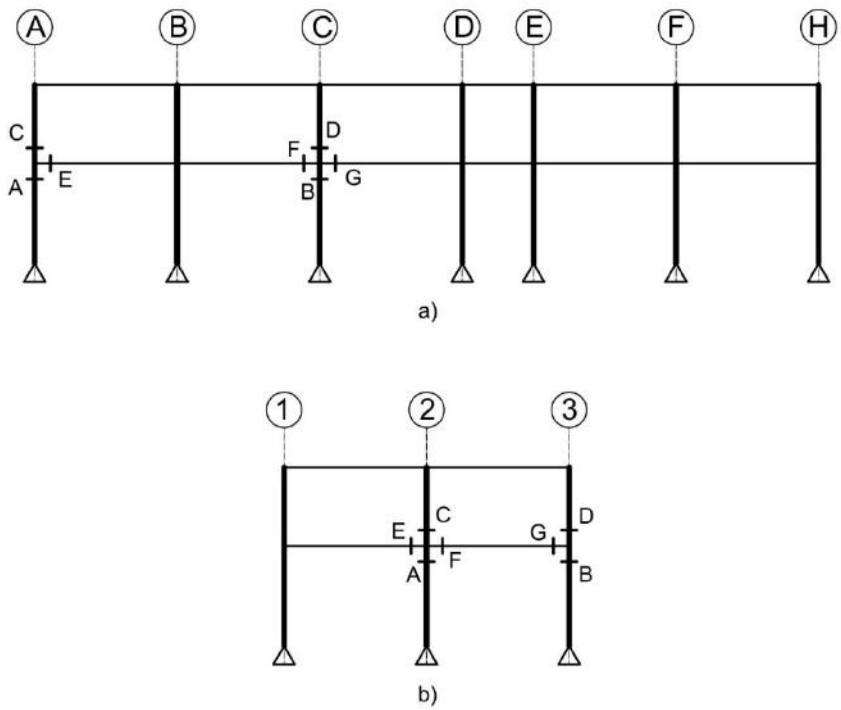

Figure 5-34. Reference frames for seismic evaluation of the retrofitted building (RS1): a) Frame 1 and b) Frame B.

Table 5-12. Seismic demand D and capacity C for RS1: Frame 1 in Longitudinal (X) Direction

Joint	Demand D: internal forces from analysis			Capacity C (СНиП)		Capacity/Demand (C/D)	
	M3 (t·m)	N (t)	V2 (t)	M_{ult} (t·m)	Q_{ult} (t)	Bending	Shear
A	149.09	9.45	36.19	48.13	79.65	**0.32**	2.20
B	168.45	-56.27	40.88	59.60	79.65	**0.35**	1.95
C	63.86	0.65	7.59	49.69	79.65	**0.78**	10.49
D	10.32	-26.73	23.34	54.51	79.65	5.28	3.41
E	97.60	1.61	39.13	14.96	36.97	**0.15**	**0.94**
F	90.97	1.54	37.51	14.96	36.97	**0.16**	**0.99**
G	88.71	1.57	36.33	14.96	36.97	**0.17**	1.02

Table 5-13. Seismic demand D and capacity C for RS1: Frame B in Transverse (Y) Direction

Joint	Demand D: internal forces from analysis			Capacity C (СНиП)		Capacity/Demand (C/D)	
	M3 (t·m)	N (t)	V2 (t)	M_{ult} (t·m)	Q_{ult} (t)	Bending	Shear
A	213.54	-99.61	51.83	66.66	79.65	**0.31**	1.54
B	173.57	7.71	42.13	48.44	79.65	**0.28**	1.89
C	31.22	-53.22	55.63	59.08	79.65	1.89	1.43
D	47.77	-2.22	10.55	50.20	79.65	1.05	7.55
E	123.55	1.81	42.69	14.96	36.97	**0.12**	**0.87**
F	123.26	1.71	42.55	14.96	36.97	**0.12**	**0.87**
G	127.60	1.65	42.64	14.96	36.97	**0.12**	**0.87**

The seismic base shear force for each direction of seismic loading was obtained as a sum of the support reactions at each column location (see *Table 5-14*). The ratio of seismic base shear force and total seismic weight (ΣQ=1360 t), $S_{x/y}/\Sigma Q$, is also shown in the table. It can be seen that the ratio is higher for retrofitted structure (0.63 and 0.62 for X- and Y-direction respectively) than the existing structure (0.53 and 0.50 for X- and Y-direction respectively). This can be explained by increased stiffness of the retrofitted structure and the corresponding decrease of fundamental period (see *Table 5-11*).

Table 5-14. Seismic base shear for the existing and the retrofitted building with RC jacketing of existing columns (RS1)

	S_x (tonf)	$S_x/\Sigma Q$	S_y (tonf)	$S_y/\Sigma Q$
Existing (pinned supports)	717.79	0.53	684.91	0.50
Retrofitted (RS1)	857.41	0.63	845.46	0.62

5.5.3.3 Displacements

Interstory seismic displacements for each horizontal direction (X and Y) at each floor level were obtained from the analysis. These displacements were compared with the limits set by paragraph 5.4.3 of СНиП КР 20-02:2009. The results are summarized in *Table 5-15*.

Table 5-15. Seismic Interstory Displacements for RS1: Spectral Method

	Level	Displacements		СНиП КР 20-02:2009 Displacement Limits	Difference	
		Δ_{kX} (mm)	Δ_{kY} (mm)	Δ_{max} (mm)	X-direction (mm) (% exceedance)	Y-direction (mm) (% exceedance)
Existing (pinned supports)	Roof	23.8	27.6	19.8	+4.0 (+20.2%)	+7.8 (+39.3%)
	Level 1	154.3	157.8	24.7	+129.6 (+525%)	+133.1 (+539%)
Retrofitted (RS1)	Roof	19.8	25.0	19.8	0	+5.2 (+26.3%)
	Level 1	57.1	64.5	24.7	+32.4 (+131%)	+39.7 (+161%)

It can be seen that the retrofit was effective in reducing the displacements in X-direction, so that the СНиП КР 20-02:2009 limits have not been exceeded. (Note that the displacements in X-direction of the existing structure exceeded the code limits by 20%.) In spite of the

retrofit, displacement limit for Y-direction was exceeded by 26.3%, although the extent of exceedance is less compared to the existing building (39.3%). In conclusion, retrofit scheme RS1 has not proven to be sufficiently effective in terms of controlling lateral displacements in the building.

5.5.4 Nonlinear static (pushover) analysis

This section presents input for the pushover analysis of the retrofitted structure and the key results.

5.5.4.1 Numerical models for the pushover analysis

Pushover analysis was performed on two-dimensional (2-D) models: Frame 1 in longitudinal (X) direction and Frame B in transverse (Y) direction. These frames are shown in *Figure 5-33*. Model properties (geometry, cross-sections, and materials) are the same as for linear analysis. Nonlinear characteristics of structural members used for the pushover analysis are explained next.

5.5.4.2 Plastic hinge properties for RC column sections with jacketing

Plastic hinges for beam sections are the same as for the existing building. Moment plastic hinge properties for the columns are different at different floors, due to the difference in axial load level (Figure 5-35b). Moment plastic hinge properties for retrofitted columns are different from the existing columns at the same location due to RC jacketing (Figure 5-36b).

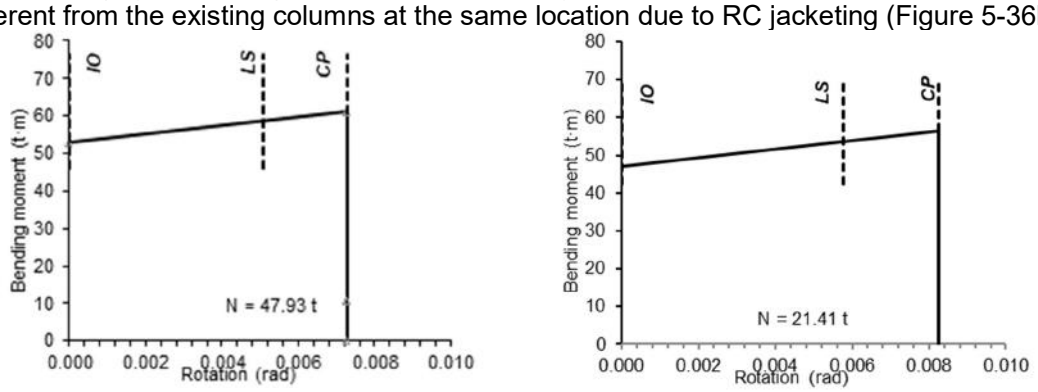

a) b)

Figure 5-35. Jacketed RC column hinge properties for frame 1: a) moment hinge at the first floor level CH-M3(L1), and b) moment hinge at roof level CH-M3(RL).

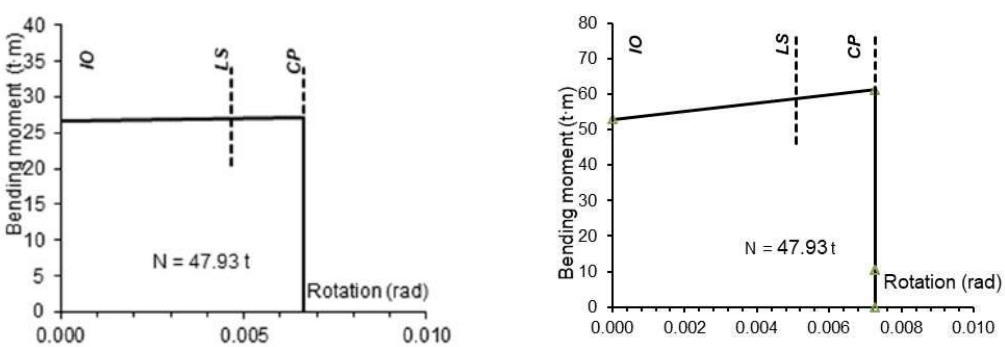

a) b)

Figure 5-36. Column moment hinge properties for frame 1 – Level 1 CH-M3(L1): a) existing column and b) jacketed column.

Deformation limits associated with the IO, LS, and CP performance levels were adopted from ASCE/SEI 41-13 (ASCE 2014). The moment and shear capacities for RC columns and beams for plastic hinge properties were determined according to СП 63.13330.2012. Plastic hinge locations for jacketed RC columns are different from the existing building (see *Figure 5-37*).

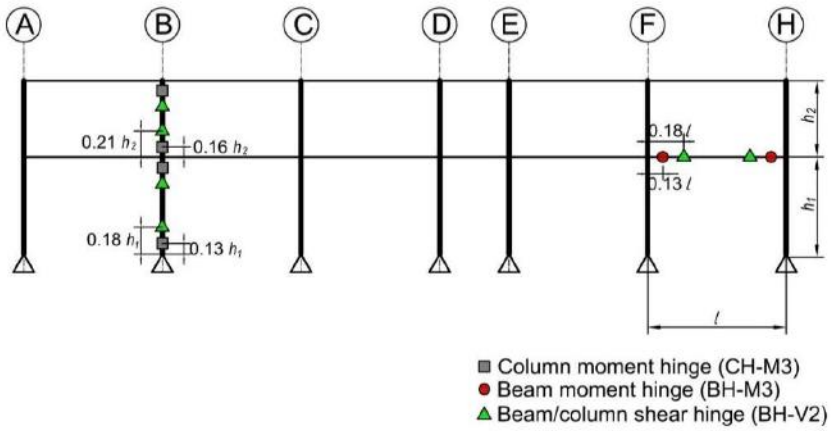

Figure 5-37. Typical plastic hinge locations for Frame 1 (RS1).

5.5.4.3 The results of pushover analysis

The pushover analysis was performed on two 2-D frame models (Frame 1 and Frame B) that were subjected to constant gravity loading and an increasing lateral loading (in the same manner as for the existing building). The target displacement was calculated based on ASCE/SEI 41-13 (ASCE 2014), in the same manner as for the existing building (see Section 5.3.2.4).

For the retrofitted building, the following target displacements were determined:

X-direction: $\delta_{tx} = 223$ mm for $T_i = 0.66$ sec

Y-direction: $\delta_{tx} = 260$ mm for $T_i = 0.71$ sec

Capacity Curve (CC) for Frame 1 is shown in *Figure 5-38*, while the CC for Frame B is shown in *Figure 5-39*. Each chart shows two CCs: one for each load pattern (LP1 and LP2). It can be seen that load pattern LP1 is more critical for both frames, because it gives lower inelastic forces and displacements at failure than LP2.

The CCs show a ductile behavior of the frame structures. There are significant inelastic lateral displacements both in Frame 1 and Frame B. It can be observed that the maximum base shear force capacity corresponds to lateral displacements of 89 mm (Frame 1) and 96 mm (Frame B). These displacements are significantly less than the target displacements (223 and 260 mm for X- and Y-directions respectively), and the estimated nonlinear displacement limit according to СНиП КР 20-02:2009 (148 mm). It can be concluded that the retrofitted structure shows a ductile behavior. The failure would take place at displacements which are significantly less than the target displacement expected at the design earthquake according to СНиП КР 20-02:2009.

It can be seen from deformed shape plots that the failure mechanism is different from the existing structure. For example, deformed shape for frame 1 at the peak shear capacity (denoted by black circle in *Figure 5-38*) is shown in Figure 5-40a). It can be seen that plastic hinges develop in the beams, and there are no plastic hinges in the columns. This is a desirable “weak beam-strong column” failure mechanism - as opposed to the “weak column-strong beam” mechanism developed in Frame 1 as a result of the pushover analysis of the

existing building (see Figure 5-22a). Note that the status of moment plastic hinges at the peak shear capacity is at the LS performance level, except for one hinge which is at the collapse (or C) performance level. Failure mechanism for Frame B is similar, as illustrated by deformed shape in Figure 5-40b).

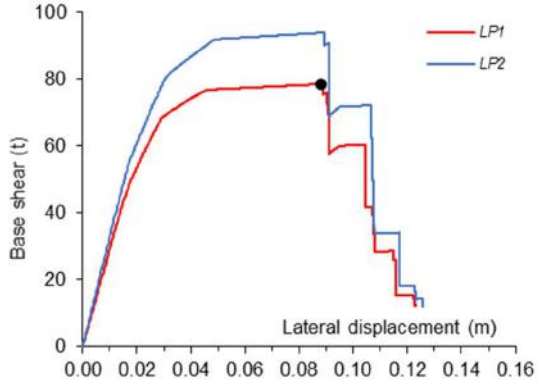

Figure 5-38. Capacity curve for Frame 1 (RS1) (LP1: maximum force 78.45 t and the corresponding displacement 89 mm).

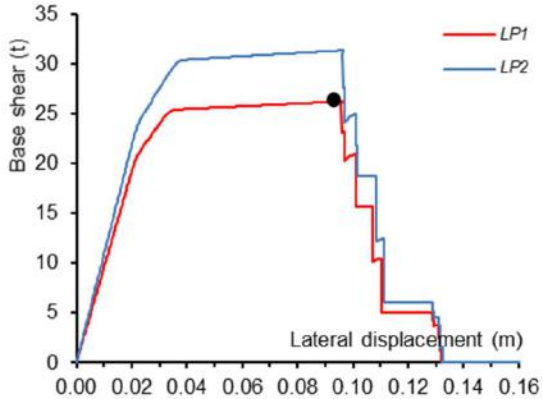

Figure 5-39. Capacity curve for Frame B (RS1) (LP1: max force 26.25 t and the corresponding displacement 96 mm).

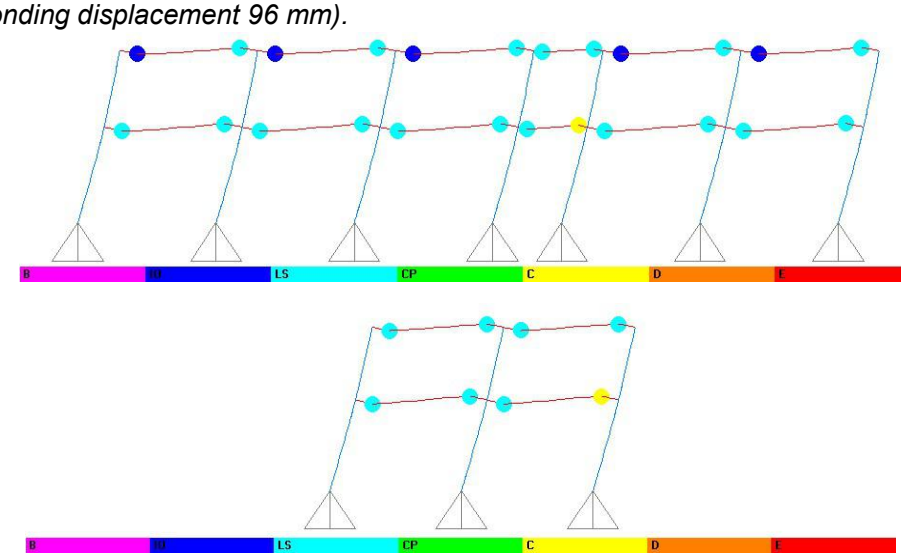

Figure 5-40. Deformed shape for RS 1, load pattern LP1, at the maximum shear capacity (labelled with black solid circle on the capacity curves): a) frame 1 (displacement 89 mm), and b) frame B (displacement 96 mm).

5.5.5 Design of retrofitted columns with RC jackets

Design of RC columns retrofitted with RC jackets needs to be performed according to СП 63.13330.2012. The design needs to take into account the effect of a) axial load and bending moments and b) shear forces.

The existing RC columns have square cross-section (400 mm by 400 mm). Cross-sectional properties of the column with RC jacket are increased to 600 mm by 600 mm. Thickness of RC jacket is 100 mm. It should be noted that a new RC jacket has higher concrete grade (B30) than the existing concrete column. Concrete properties of the new RC jacket were used for the design of the retrofitted column section.

For determining the resistance of a column with RC jacket for the combined effect of axial load and bending it is required to take into account both new and existing longitudinal reinforcement, as shown in *Figure 5-41*. The resistance for axial load and bending was determined according to СП 63.13330.2012 (Clauses 8.1.1 and 12.4.1).

For determining the shear resistance of a column with RC jacket only new steel ties (stirrups) were taken into account, because the shear resistance of existing steel ties is very small. The shear resistance was determined according to СП 63.13330.2012 Clause 5.2.1.

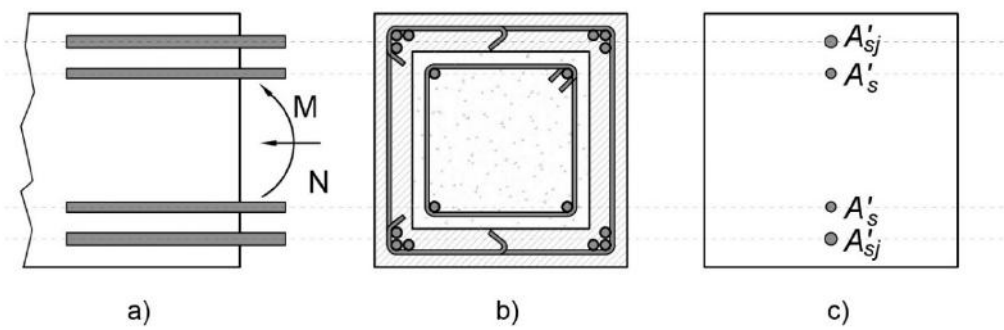

Figure 5-41. Cross-section of the retrofitted RC column with RC jacket considered for determining the resistance for combined effect of axial load and bending.

5.5.6 Typical construction details: RS1

Construction details for RC column with new RC jackets are illustrated in *Figure 5-42*. It is expected that the construction of an RC jacket will be most challenging at the floor level.

5.5.7 Construction procedure: RS1

Depending on the location within a building, RC jackets can be applied on two, three, or four column surfaces (see *Figure 5-30*). The construction procedure comprises the following activities, which are illustrated in *Figure 5-42*:

1. Expose the existing RC column by partially removing concrete cover through sandblasting and metal brushes.
2. Place new longitudinal reinforcing bars in the form of 3-bar bundles at each corner of the column. It is required to anchor longitudinal bars into the existing column footing. This can be achieved by providing a hole in the footing and embedding bars by means of epoxy grout.
3. Place new U-shaped steel ties around the longitudinal reinforcement in RC jackets.
4. Apply a 100 mm shotcrete overlay on the exposed column surfaces. Shotcrete specification is included in СП 70.13330.2012.
5. At the column-beam intersection it is required to ensure continuity of longitudinal reinforcement. Create holes in the existing floor slab in order to pass through longitudinal reinforcement. The hole should be filled with epoxy grout.

5.5.8 Construction cost estimates: RS1

Table 5-16. Construction cost estimates: RS1

#	Item	Unit	Quantity	Unit price (KGS)	Total price (KGS)	Remarks
Material cost						
	Option J2 (2-sided jacketing): cost for 1 meter height					
1	Procurement of reinforcing steel bars Grade AIII, 16 mm diameter	Kg	9.48	50	474	
2	Procurement of reinforcing steel bars Grade AI, 10 mm diameter	Kg	6.17	45	277.65	
3	Procurement of concrete grade B30 with 100 mm jacket thickness	m^3	0.07	3255	227.85	
4	Procurement of beacon * (It is necessary to control the applied layer of cement:sand mortar) Corner 2.5 * 2.5 * 3 GOST 8509-93.	Kg	2.24	71	159.04	
5	Procurement of a repair mortar based on epoxy resin and mineral aggregates.	Liter	0.6	1120	672	The price assumes use of local products (not imported)
6	Total material cost for 1 meter height				1810.54	Assuming that epoxy grout is used
	Option J3 (3-sided jacketing): cost for 1 meter height					
7	Procurement of reinforcing steel bars Grade AIII, 16 mm dia	Kg	14.22	50	711	
8	Procurement of reinforcing steel bars Grade AI, 10 mm diameter	Kg	8.02	45	360.9	

9	Procurement of concrete grade B30 with 100 mm jacket thickness	m^3	0.1	3255	325.5	
10	Procurement of beacon * (It is necessary to control the applied layer of cement:sand mortar) Corner 2.5 * 2.5 * 3 GOST 8509-93.	Kg	3.36	71	238.56	
11	Procurement of a repair mortar based on epoxy resin and mineral aggregates.	Liter	0.9	1120	1008	The price assumes use of local products (not imported)
12	Total material cost for 1 meter height				2643.96	Assuming that epoxy grout is used
	Option J4 (4-sided jacketing): cost for 1 meter height					
13	Procurement of reinforcing steel bars Grade AIII, 16 mm dia	Kg	18.96	50	948	
14	Procurement of reinforcing steel bars Grade AI, 10 mm diameter	Kg	9.872	45	444.24	
15	Procurement of concrete grade B30 with 100 mm jacket thickness	m^3	0.13	3255	423.15	
16	Procurement of beacon* (necessary to control the applied layer of cement:sand mortar) corner 2.5 * 2.5 * 3 GOST 8509-93.	Kg	4.48	71	318.08	
17	Procurement of a repair mortar based on epoxy resin and mineral aggregates.	Liter	1.2	1120	1344	The price assumes use of local products (not imported)
18	Total material cost for 1 meter height				3477.47	Assuming that epoxy grout is used

Construction cost						
	Option J2 (2-sided jacketing): cost for 1 meter height					
19	Surface cleaning with sandblasting machine and dust removal	m^2	0.8	300	240	
20	Drilling with circular diamond drills with the use of cooling liquid vertical holes (40 mm diameter) in the 220 mm deep slab.	piece	2	400	800	
21	Installation of reinforcing bars in the finished holes, with strapping transverse reinforcement, with the application of the solution on an epoxy basis.	m	1	100	100	
22	Wiring **, installation of beacon, application of cement-sand mortar by shotcrete	m^2	0.8	2700	2160	
23	Transportation and other expenses	Kg	350	1	350	
24	Total construction cost for 1 meter height (KGS)				5461	
	Option J2 (2-sided jacketing): cost for 1 meter height					
25	Surface cleaning with sandblasting machine and dust removal	m^2	1.2	300	360	
26	Drilling with circular diamond drills with the use of cooling liquid vertical holes (40 mm diameter) in the 220 mm deep slab.	piece	3	400	1200	
27	Installation of reinforcing bars in the finished holes, with strapping transverse reinforcement, with the application of the solution on an epoxy basis.	m	1	100	100	

28	Wiring **, installation of beacon, application of cement-sand mortar by shotcrete	m^2	1.2	2700	3240	
29	Transportation and other expenses	Kg	350	1	350	
30	Total construction cost per meter (KGS)				7894	
	Option J4 (4-sided jacketing): cost for 1 meter height					
31	Surface cleaning with sandblasting machine and dust removal	m^2	1.6	300	480	
32	Drilling with circular diamond drills with the use of cooling liquid vertical holes (40 mm diameter) in the 220 mm deep slab.	piece	4	400	1600	
33	Installation of reinforcing bars in the finished holes, with strapping transverse reinforcement, with the application of the solution on an epoxy basis.	m	1	100	100	
34	Wiring **, installation of beacon, application of cement-sand mortar by shotcrete	m^2	1.6	2700	4320	
35	Transportation and other expenses	Kg	350	1	350	
36	Total construction cost for 1 meter height (KGS)				10327	

Total cost							
Level 1 (h= 4.12 m)							
	Item	J2		J3		J4	
		Length (m)	Cost (KGS)	Length (m)	Cost (KGS)	Length (m)	Cost (KGS)
37	Material cost	8.24	14918.85	49.44	130717.40	28.84	100290.24
38	Construction cost	8.24	44994.85	49.44	390277.40	28.84	297844.24
39	Subtotal		59913.70		520994.80		398134.47
40	Total cost (Level 1)						979042.93
Level 2 (h=3.3 m)							
	Item	J2		J3		J4	
		Length (m)	Cost (KGS)	Length (m)	Cost (KGS)	Length (m)	Cost (KGS)
41	Material cost	6.6	11949.56	39.6	104700.8	23.1	80329.56
42	Construction cost	6.6	36039.56	39.6	312600.8	23.1	238564.56
43	Subtotal		47989.13		417301.6		318894.11
44	Total cost (Level 2)						784184.87
Total cost (Level 1 + Level 2)		**Total built-up area (m^2)**	**Total cost (for the entire building)**			**Total cost (for 1 m^2)**	
45	Total cost (KGS)	828.32	1763228.0			2129	
46	Total cost (USD)	828.32	25554.0			30.9	

Notes:
1. * Beacon is an element (angle) that is used as a support for a concrete finisher or a float. It bounds the mortar and levels the surface. It is also needed to control the application of the required layer.
2. ** Wiring is the process of finding an ideally vertical plane.
3. *** Building plan dimensions are: 33.4m * 12.4m
4. Assumed exchange rate: 1 USD= 69 KGS

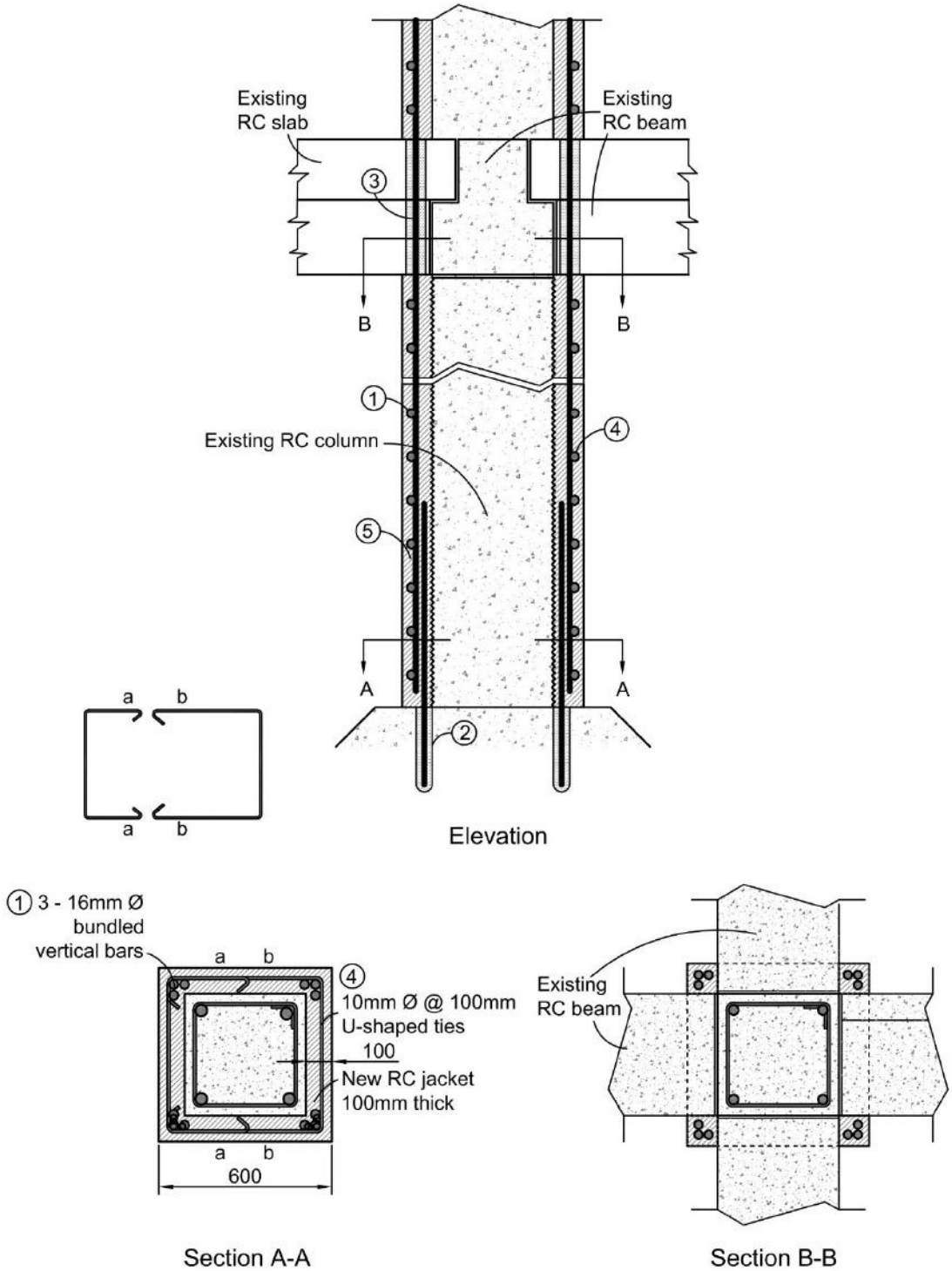

Figure 5-42. Construction details for retrofit scheme with new RC column with RC jacketing (RS1): 1 – longitudinal jacket reinforcement (3 bundled bars at each corner); 2 – anchorage of bars into the existing footing; 3 – drilled holes through the existing beam to enable continuity of jacket reinforcement; 4 – new U-shaped ties; 5 – new RC jacket.

5.6 Retrofit Scheme 2 (RS2): RC Jacketing of the Existing Columns and New Steel Braces

5.6.1 An overview of the retrofit scheme

The proposed retrofit scheme RS2 consists of constructing new 100 mm thick RC jackets encasing all columns (in both directions), plus steel bracing (dashed lines) along selected bays in each horizontal direction of the building plan, as shown in Figure 5-43. Analysis, design and construction of jackets is identical to RS1 discussed in Section 5.5.

Two different bracing configurations were considered for this scheme, namely X-shaped configuration and Chevron (inverted V-shaped), as shown in *Figure 5-44*. Note that Chevron braces were selected for the retrofit because the resulting axial forces in the existing columns adjacent to the braces are significantly lower than in X-shaped bracing configuration. On the other hand, axial forces in the existing beams in the braced bays are higher for the Chevron braces. Finally, axial forces in the braces are higher for the Chevron braces than for X-shaped braces, hence larger section sizes are required for the Chevron braces than X-shaped braces.

This retrofit scheme requires strengthening of the existing column footings to resist increased internal forces resulting from the installation of steel braces.

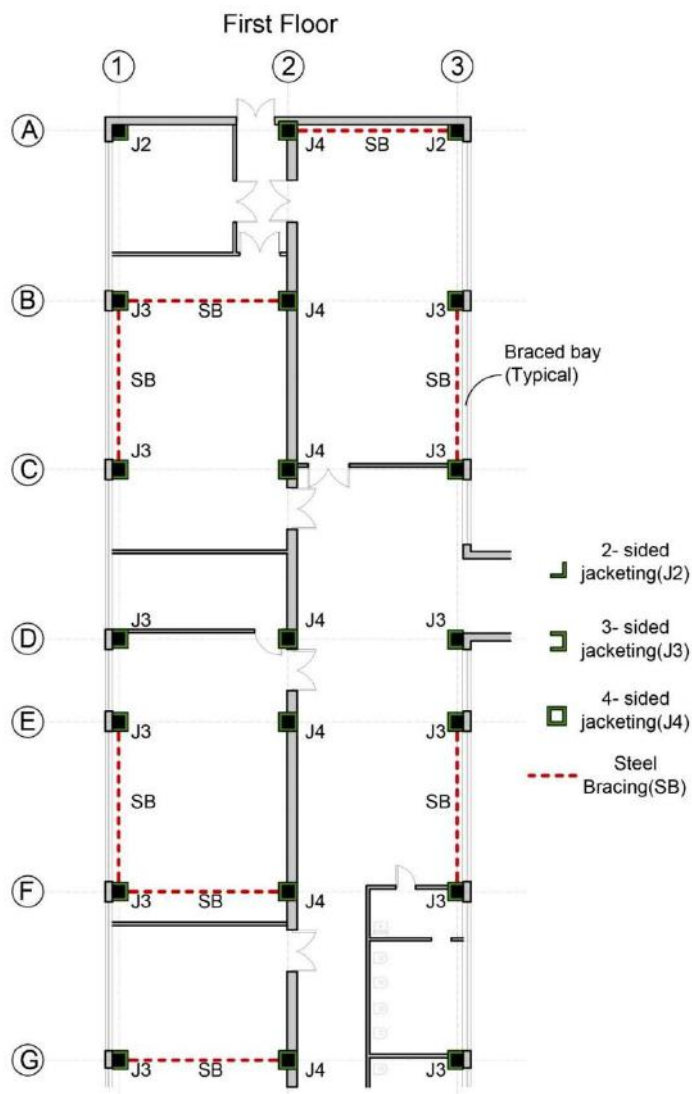

Figure 5-43. Floor plan of the retrofitted building for RS2: RC column jacketing and steel braces.

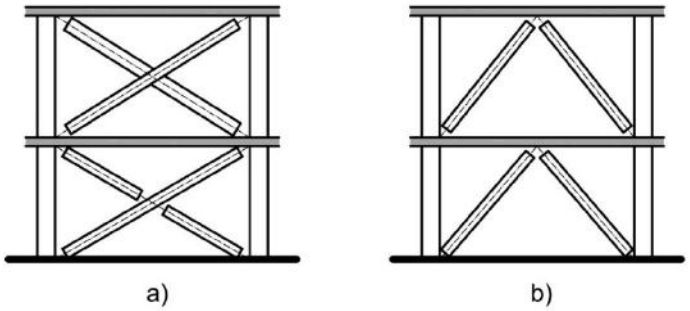

Figure 5-44. Different steel bracing configurations considered for the retrofit scheme RS2: a) X-shaped braces, and b) Chevron (inverted V) braces.

5.6.2 Numerical model

Numerical model for this retrofit scheme is shown in *Figure 5-45*. 2-D equivalent frame models for Frames 1 and B are shown in *Figure 5-46*. The properties of RC columns were modified to take into account jacketing, in the same manner as RS1 (see *Figure 5-31*). New Chevron steel braces have been added, with a typical section shown in *Figure 5-47*.

Concrete and steel material properties for RC jackets are summarized in Tables 5-9 and 5-10. Material properties for steel braces are summarized in *Table 5-17*.

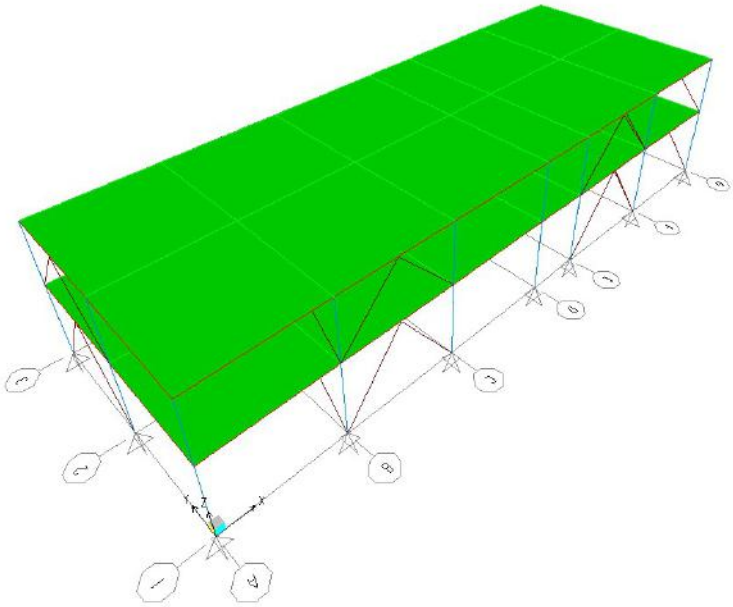

Figure 5-45. A 3-D numerical model of the retrofitted building with RC column jacketing and steel braces (RS2).

Table 5-17. Steel Properties: Braces
Steel: Class C275

No.	Property	Unit	Value
1	Modulus of elasticity	t/m^2	$2.0x10^7$
2	Design tensile strength	t/m^2	38750

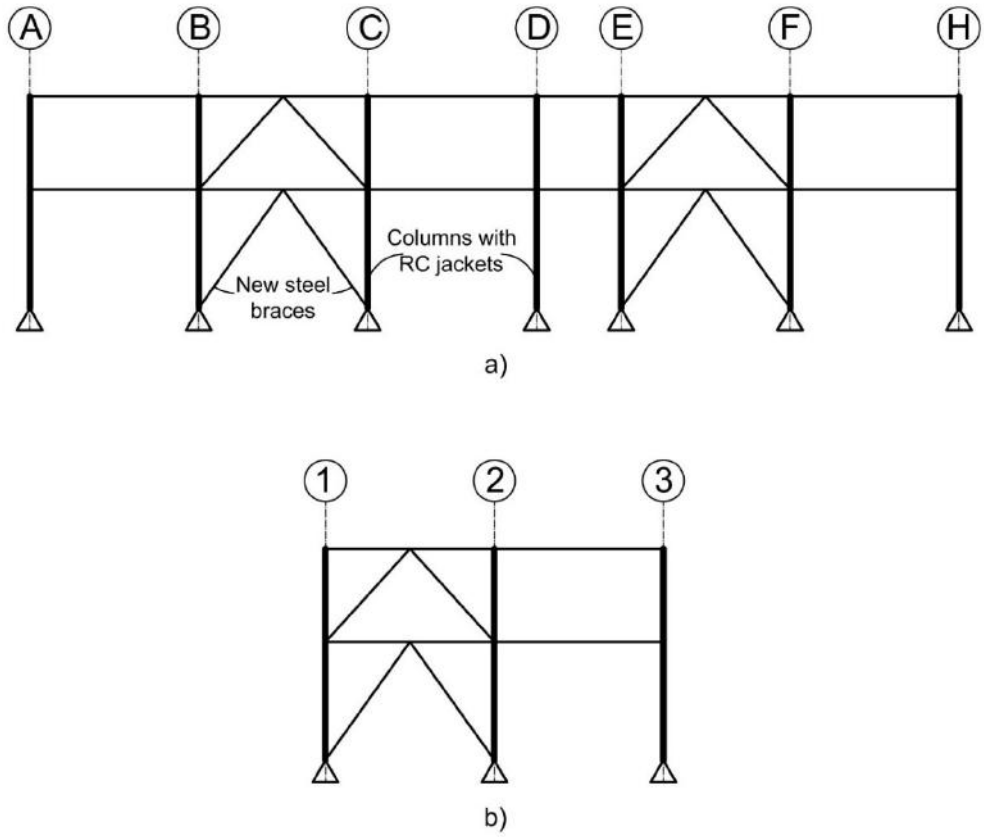

Figure 5-46. A 2-D numerical model of the retrofitted building (RS2): a) Frame 1 and b) Frame B.

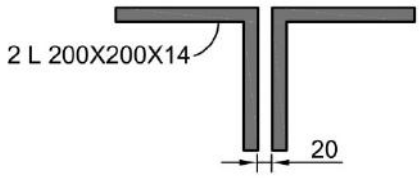

Figure 5-47. Cross-section of a steel brace.

5.6.3 Linear elastic analysis (Spectral Method)

5.6.3.1 Dynamic properties

Vibration periods for the existing and the retrofitted building are shown in *Table 5-18*. It can be seen from the table that the retrofitted building is characterized by a significant increase in the lateral stiffness due to the presence of RC jackets and steel braces. For example, fundamental period in Y-direction is 1.15 sec for the existing building, but it is significantly lower (0.23 sec) for the retrofitted building.

Table 5-18. Vibration periods for the existing and the retrofitted building with RC column jacketing plus steel braces (RS2)

	Existing (pinned supports)	Retrofitted
Mode	Period (sec)	
1 (Y-dir)	1.153	0.229
2 (X-dir)	1.115	0.227
3	1.034	0.164
4	0.211	0.102
5	0.204	0.102
6	0.189	0.101
7	0.127	0.099
8	0.124	0.097
9	0.123	0.097
10	0.121	0.093
11	0.118	0.093
12	0.115	0.092

5.6.3.2 Capacity evaluation of the retrofitted building: seismic demand (D) and capacity (C)

The evaluation of seismic forces is presented for Frame 1 in longitudinal (X) direction and Frame B in transverse (Y) direction (Figure 5-48). Seismic demand (**D**) values were obtained from the linear elastic analysis. The beam and column capacities (**C**) were calculated according to СНиП 52-01-2003 provisions for the Limit States Design Method. It should be noted that the beam capacities are the same as for the existing building, while the capacities of column sections take into account RC jacketing. Capacities of steel braces were calculated according to СП 16.13330.2011. A summary of **C** and **D** values at the selected sections are presented in Tables 5-19 and 5-20.

It can be seen from the table that the bending and shear capacities have improved for column sections compared to the existing building. Note that **C/D** ratios are satisfactory at most locations (values are higher than 1.0). However, these values are still not adequate for beam sections in Frame 1 (see the values shown in bold in *Table 5-19*). For Frame B only one beam section has a deficient **C/D** ratio (see Table 5-20). In all cases, shear capacity of beam and column section is satisfactory. It can be concluded that retrofit scheme RS2 is not entirely effective in enhancing the lateral capacity of the existing building to the level required by СНиП КР 20-02:2009.

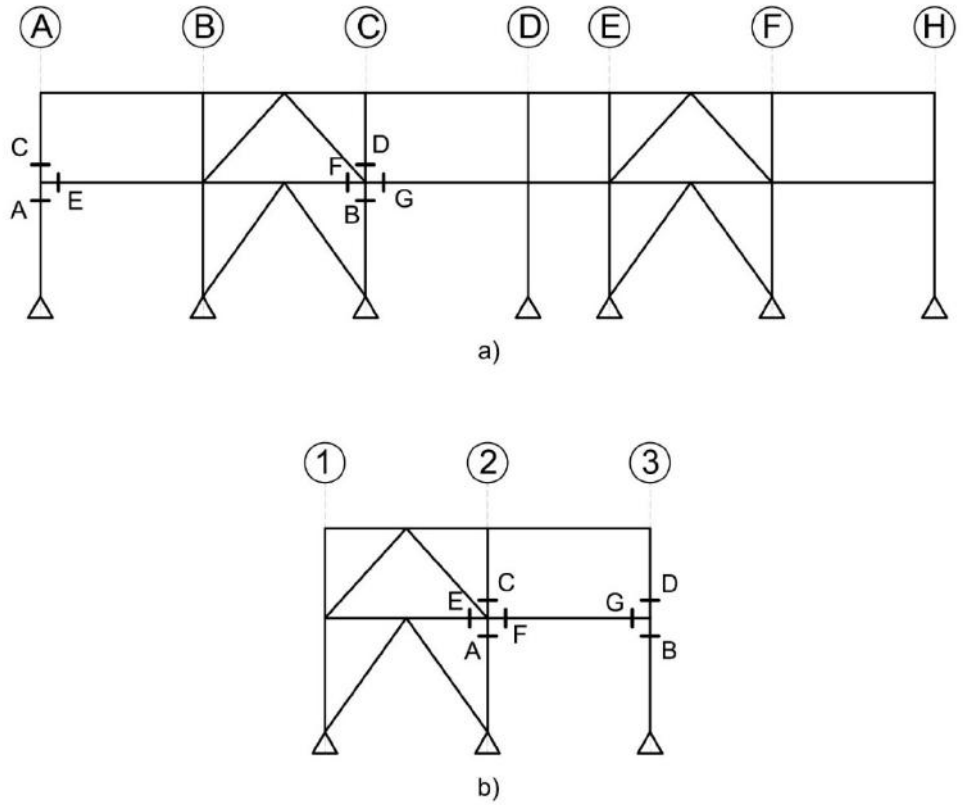

Figure 5-48. Reference frames for seismic evaluation of the retrofitted building (RS2): a) Frame 1, and b) Frame B.

Table 5-19. Seismic demand D and capacity C for RS2: Frame 1 in Longitudinal (X) Direction

Joint	Demand D: internal forces from analysis			Capacity C (СНиП)		Capacity/Demand (C/D)	
	M3 (t·m)	N (t)	V2 (t)	M_{ult} (t·m)	Q_{ult} (t)	Bending	Shear
A	15.59	-31.11	3.79	55.28	79.65	3.55	21.02
B	17.92	-1.93	4.35	50.15	79.65	2.80	18.31
C	10.62	-13.83	5.42	52.25	79.65	4.92	14.70
D	5.39	-22.13	6.14	53.71	79.65	9.96	12.97
E	18.31	-1.81	13.27	14.96	36.97	**0.82**	2.79
F	10.82	36.10	8.21	7.70	36.97	**0.71**	4.50
G	18.64	31.00	13.42	8.74	36.97	**0.47**	2.75

Table 5-20. Seismic demand D and capacity C for RS2: Frame B in Transverse (Y) Direction

Joint	Demand D: internal forces from analysis			Capacity C (СНиП)		Capacity/Demand (C/D)	
	M3 (t·m)	N (t)	V2 (t)	M_{ult} (t·m)	Q_{ult} (t)	Bending	Shear
A	17.25	-37.91	4.19	56.46	79.65	3.27	19.01
B	15.21	-54.50	3.69	59.30	79.65	3.90	21.59
C	1.02	-51.19	3.45	58.74	79.65	57.59	23.09
D	5.52	-26.31	1.19	54.44	79.65	9.86	66.94
E	8.49	53.57	2.60	4.14	36.97	**0.49**	14.22
F	9.79	3.64	4.11	14.96	36.97	1.53	8.99
G	10.66	3.64	4.30	14.96	36.97	1.40	8.60

The seismic base shear force for each direction of seismic loading was obtained as a sum of the support reactions at each column location (see *Table 5-21*). The ratio of seismic base shear force and total seismic weight (ΣQ=1360 t), $S_{x/y}/\Sigma Q$, is also shown in the table. It can be seen that the ratio is higher for retrofitted structure (0.63 for X- and Y-direction) than the existing structure (0.53 and 0.50 for X- and Y-direction respectively). This can be explained by increased stiffness of the retrofitted structure and the corresponding decrease of fundamental period (see *Table 5-18*).

Table 5-21. Seismic base shear for the existing and the retrofitted building with RC jacketing of existing columns plus new steel braces (RS2)

	S_x (tonf)	$S_x/\Sigma Q$	S_y (tonf)	$S_y/\Sigma Q$
Existing (pinned supports)	717.79	0.53	684.91	0.50
Retrofitted (RS2)	859.66	0.63	857.53	0.63

5.6.3.3 Displacements

Interstory seismic displacements for each horizontal direction (X and Y) at each floor level were obtained from the analysis. These displacements were compared to the limits set by paragraph 5.4.3 of СНиП КР 20-02:2009. The results are summarized in *Table 5-22*.

It can be seen that the retrofit was effective in reducing the displacements in both directions, hence the СНиП КР 20-02:2009 displacement limits have been met. In conclusion, retrofit scheme RS2 has been effective in terms of controlling lateral displacements in the building.

Table 5-22. Seismic Interstory Displacements for RS2: Spectral Method

	Level	Displacements		СНиП КР 20-02:2009 Displac. Limits	Difference	
		Δ_{kX} (mm)	Δ_{kY} (mm)	Δ_{max} (mm)	X-direction (mm) (% exceedance)	Y-direction (mm) (% exceedance)
Existing (pinned supports)	Roof	23.8	27.6	19.8	+4.0 (+20.2%)	+7.8 (+39.3%)
	Level 1	154.3	157.8	24.7	+129.6 (+525%)	+133.1 (+539%)
Retrofitted (RS2)	Roof	2.5	2.7	19.8	-17.3 (-87.4%)	-17.1 (-86.4%)
	Level 1	6.7	6.7	24.7	-18.1 (-73.0%)	-18.0 (-73.0%)

5.6.4 Nonlinear static (pushover) analysis

This section presents input for the pushover analysis of the retrofitted structure and the key results.

5.6.4.1 Numerical models for pushover analysis

Pushover analysis was performed on two-dimensional (2-D) models: Frame 1 in longitudinal (X) direction and Frame B in transverse (Y) direction (see *Figure 5-46*). Model properties (geometry, cross-sections, and materials) are the same as for linear analysis (Section 5.6.2). Nonlinear characteristics of structural members used in the pushover analysis are explained next.

5.6.4.2 Plastic hinge properties for steel braces

Plastic hinges were assigned for beam and column sections (similar to RS1 – see Section 5.5.4.2). In addition, a tension/compression axial hinge (nonlinear spring) was assigned at midlength of each brace (see Figures 5-49 and 5-50). The values for the IO, LS, and CP performance levels were assumed as follows: IO corresponds to the onset of yield, LS corresponds to 70% of CP, and CP corresponds to the ultimate state - similar to ASCE/SEI 41-13 (ASCE 2014). Steel brace capacities for plastic hinge properties were determined according to CP 16.13330.2011.

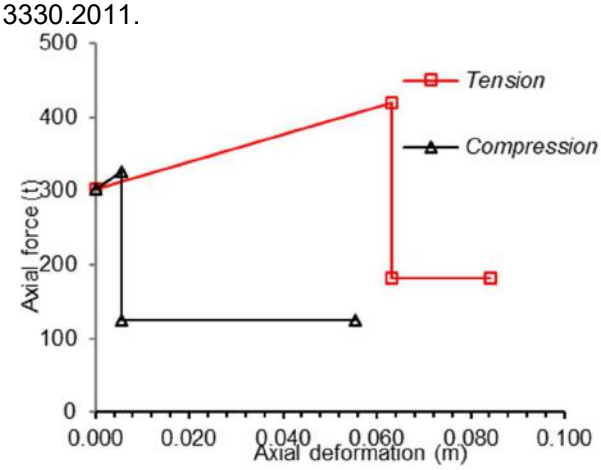

Figure 5-49. Axial plastic hinge properties for a steel brace.

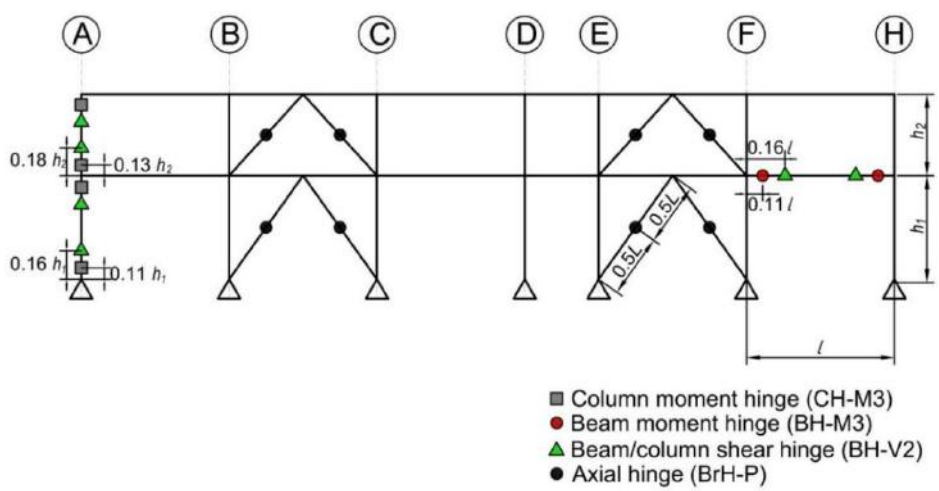

Figure 5-50. Typical plastic hinge locations for Frame 1 (RS2).

5.6.4.3 The results of pushover analysis

The pushover analysis was performed on two 2-D frame models (Frame 1 and Frame B) which were subjected to constant gravity loading and increasing lateral loading (in the same manner as for the existing building). The target displacement was calculated based on ASCE/SEI 41-13 (ASCE 2014), using the fundamental period of the retrofitted structure T_i for X and Y directions. For the retrofitted building, the following target displacement values were calculated:

X-direction: $\delta_{tx} = 26$ mm for $T_i = 0.23$ sec

Capacity Curve (CC) for Frame 1 is shown in *Figure 5-51*, while the CC for Frame B is shown in *Figure 5-52*. Each chart shows two CCs – one for each load pattern (LP1 and LP2). It can be seen that LP2 is more critical for both frames, because it gives lower inelastic forces and displacements at failure than LP1. It can be also seen that the CCs show a drop in the capacity; this corresponds to the onset of yielding in the braces.

It can be observed from the CCs that the maximum base shear force capacity corresponds to relatively small lateral displacements of 23 mm (Frame 1) and 29 mm (Frame B). These displacements are similar to the target displacement (26 mm). The small displacement values are due to a significant increase in the lateral stiffness due to the retrofit. The retrofitted structure does not show a significant ductility but it shows an increase in the capacity compared to the existing structure. For example, peak base shear capacity for Frame 1 in the existing building is 50.96 t (*Figure 5-20*) as opposed to 828.04 t in the retrofitted building (*Figure 5-51*).

Figure 5-53 shows deformed shape diagrams for Frames 1 and B. At the 23 mm lateral displacement, one of the braces in Frame 1 shows collapse (C) performance level due to a buckling failure (*Figure 5-53*a). Frame B (at 29 mm lateral displacement) shows a similar failure mechanism, as illustrated by the deformed shape diagram (*Figure 5-53*b).

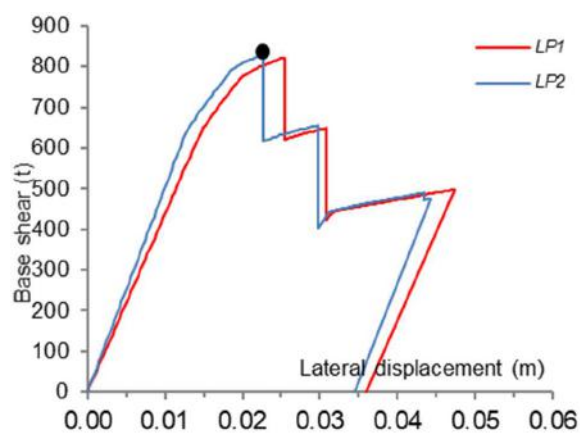

Figure 5-51. Capacity curve for Frame 1 (RS2) (LP2: maximum force 828.04 t and the corresponding displacement 23 mm).

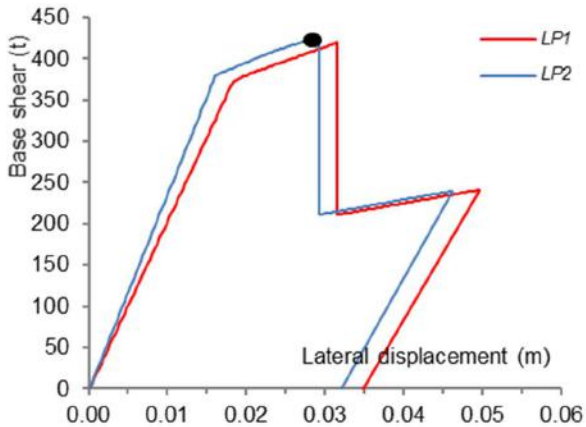

Figure 5-52. Capacity curve for Frame B (RS2) (LP2: max force 425.6 t and the corresponding displacement 29 mm).

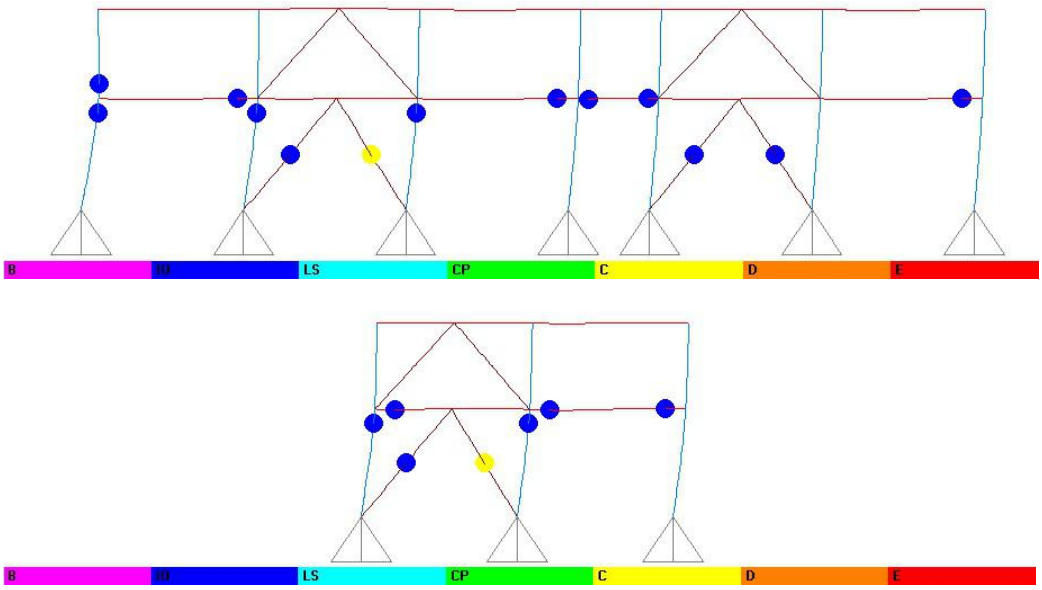

Figure 5-53. Deformed shape for RS2, load pattern LP2, at the maximum shear capacity (labelled with black solid circle on the capacity curves): a) Frame 1 (displacement 23 mm), and b) Frame B (displacement 29 mm).

5.6.5 Design of steel braces

This retrofit scheme involves the construction of new RC jackets for the columns and new steel braces in selected bays along each horizontal direction of the building plan. Design of RC jackets was discussed in Section 5.5.5. Design of steel braces was performed according to СП 16.13330.2011 (Clause 15.4). The design needs to take into account the effect of tension and compression forces in the braces. A double-angle steel section (200 x 200 x 14) has been used for the brace design. The analysis has shown that high axial tension and compression forces develop in RC columns and beams adjacent to the braces due to seismic effects.

5.6.6 Typical construction details: RS2

Construction details for RS2 are illustrated in *Figure 5-54*. The drawings illustrate only the brace construction details. (Refer to *Figure 5-42* for construction details related to RC

jackets.) Note that it is required to construct new RC tie beams beneath the ground floor level; these beams are required only at the bays where steel braces are provided.

5.6.7 Construction procedure: RS2

The retrofit scheme RS2 involves both the installation of new RC jackets and steel braces. The procedure for construction of RC jackets was explained in Section 5.5.7. It is required to install RC jackets prior to installing steel braces.

The construction procedure for installing steel braces is summarized below (see *Figure 5-54*):

1. New RC tie-beams are to be constructed at the ground floor level below the grade at all brace location. (Refer to Figure 5-43 for locations of braced bays in the building.)
   1.1. Before the construction, surfaces of the existing RC columns which are to be connected with the tie-beams need to be roughened through sandblasting and metal brushes.
   1.2. Four horizontal steel bars (dowels) need to be anchored into the column at each end of a tie-beam (the locations will match longitudinal reinforcement). The holes are to be drilled and filled with epoxy grout. A minimum 125 mm embedment depth is required.
   1.3. RC tie-beams are to be constructed with minimum 300 mm by 300 mm cross-sectional dimensions and reinforced with 4 longitudinal bars and transverse reinforcement (stirrups) at uniform spacing.
2. At each braced bay it is required to provide 2 gusset plates and end plates at the base to ensure a) connection between the brace and the retrofitted RC column (vertical end plates), and b) connection between the brace and new RC tie-beam (ground floor level), or existing RC beam (first floor level) – through horizontal end plates (see Detail A, Figure 5-54).
   2.1. Each gusset plate is welded to horizontal and vertical end plates.
   2.2. The connection between end plates and RC elements is achieved by means of threaded anchor rods (with washers and nuts). The rods are to be embedded into previously drilled holes in the existing concrete. The holes are to be filled using epoxy grout. Minimum embedment depth is 125 mm.
3. At each braced bay it is also required to provide a gusset plate welded to horizontal end plate for brace connection to the underside of the existing RC beam (see Detail B, Figure 5-54).
   3.1. The gusset plate is welded to the horizontal end plate.
   3.2. The end plate is to be connected to the beam through threaded anchor rods (with washers and nuts). The rods are to be embedded into previously drilled holes in the existing concrete. The holes are to be filled by means of epoxy grout. Minimum embedment depth is 125 mm.
4. Each brace consists of two steel angles (see Section 1-1, Figure 5-54) which are attached to the gusset plates at each end through bolted connections.

5.6.8 Construction cost estimates: RS2

Retrofit scheme RS2 consists of provision of steel braces plus RC jacketing of columns. Construction cost estimates for RC jacketing were provided in *Table 5-16*, while cost estimates for steel braces are provided in *Table 5-23*. The total cost for RS2 (per m^2 of the built-up area) is equal to KGS 3998 (USD 58.0), as a result of the combined cost for RC jacketing (KGS 2129 or USD 30.9) and steel braces ((KGS 1869 or USD 27.1).

Table 5-23. Construction cost estimates: RS2 (steel braces only)

#	Item	Unit	Quantity	Unit price (KGS)	Total price (KGS)	Remarks
New RC tie-beams						
Material cost (based on 1 meter length and 400 x 400 mm cross-section)						
1	Procurement of reinforcing steel bars Grade AIII, 22 mm diameter	kg	11.92	46	548	
2	Procurement of reinforcing steel bars Grade AI, 10 mm diameter	kg	23.4	44	1030	
3	Procurement of concrete grade B15 for the construction of RC tie-beams 400 * 400mm.	m^3	0.9	2495	2246	
4	Procurement of formwork (chipboard + wooden bar + screws + nails)	piece	1	2440	2440	
5	Total material cost per meter				6263	
Construction cost (based on 1 meter length and 400 x 400 mm cross-section)						
6	Surface cleaning with sandblasting machine and dust removal	m^2	0.0625	300	18.75	
7	Manufacturing of new RC tie beams (assembly of formwork, binding and installation of reinforcement, pouring of concrete mixture)	m^3	0.16	1800	288	
8	Total construction cost per meter				306.75	

Steel braces						
Material cost for a 5.6 m long bay, Level 1						
9	Procurement of sheet metal for the end plates and new gusset plates 1500 * 6000 * 10mm.	kg	228.4	54	12334	
10	Procurement of profile bolts 150 * 12mm for fixing end plates.	piece	24	50	1200	
11	Procurement of the new double-angle steel braces 200 * 200 * 14mm for retrofitting	kg	1010.08	60	60605	The price is indicated without taking delivery from abroad
12	Procurement of bolts, nuts, washers for the brace connections with the steel gusset plate	piece	12	30	360	
13	Procurement of a repair mortar based on epoxy grout and mineral aggregates	1	1.2	1120	1344	The price assumes use of local products (not imported)
14	Total material cost per bay, Level 1				75842	
Material cost for a 5.6 m long bay, Level 2						
15	Procurement of sheet metal for the end plates and new gusset plates 1500 * 6000 * 10 mm	kg	228.4	54	12334	
16	Procurement of profile bolts 150 * 12 mm for fixing end plates.	piece	24	50	1200	
17	Procurement of the new double-angle steel braces 200 * 200 * 14 mm for retrofitting	kg	744.72	60	44683	The price is indicated without taking delivery from abroad
18	Procurement of bolts, nuts, washers for the brace connections with the steel gusset plate	piece	12	30	360	
19	Procurement of a repair mortar based on epoxy grout and mineral aggregates	1	1.2	1120	1344	The price assumes use of local products (not imported)

20	Total material cost per bay, Level 2				59921	
Construction cost for a 5.6 m long bay (one level)						
21	Manufacturing of end plates, steel gusset plates (sawcutting, drilling holes, welding)	piece	3	336	1008	
22	Installation of steel end plates, including filling holes for anchor bolts with epoxy grout	piece	3	150	450	Assuming that epoxy grout is used
23	Installation of new double-angle steel braces 200 * 200 * 14 mm	piece	4	2000	8000	
24	Transportation and other expenses	kg	1	1000	1000	
25	Total construction cost				10458	
Total cost						
Level 1 (h= 4.12 m)						
26	New RC tie-beams	m	44.8	6570	294343.6	
27	Steel braces (for 8 bays)		8	86300	690403.2	
Level 2 (h= 3.3 m)						
28	Steel braces (for 8 bays)		8	70379	563030.4	
Total cost (Level 1 + Level 2)			Total built-up area (m^2)	Total cost (entire building)		Total cost (per m^2)
29	Total cost (KGS)		828.32	1547777		1869
30	Total cost (USD)		828.32	22431.6		27.1

Notes: Assumed exchange rate 1 USD= 69 KGS

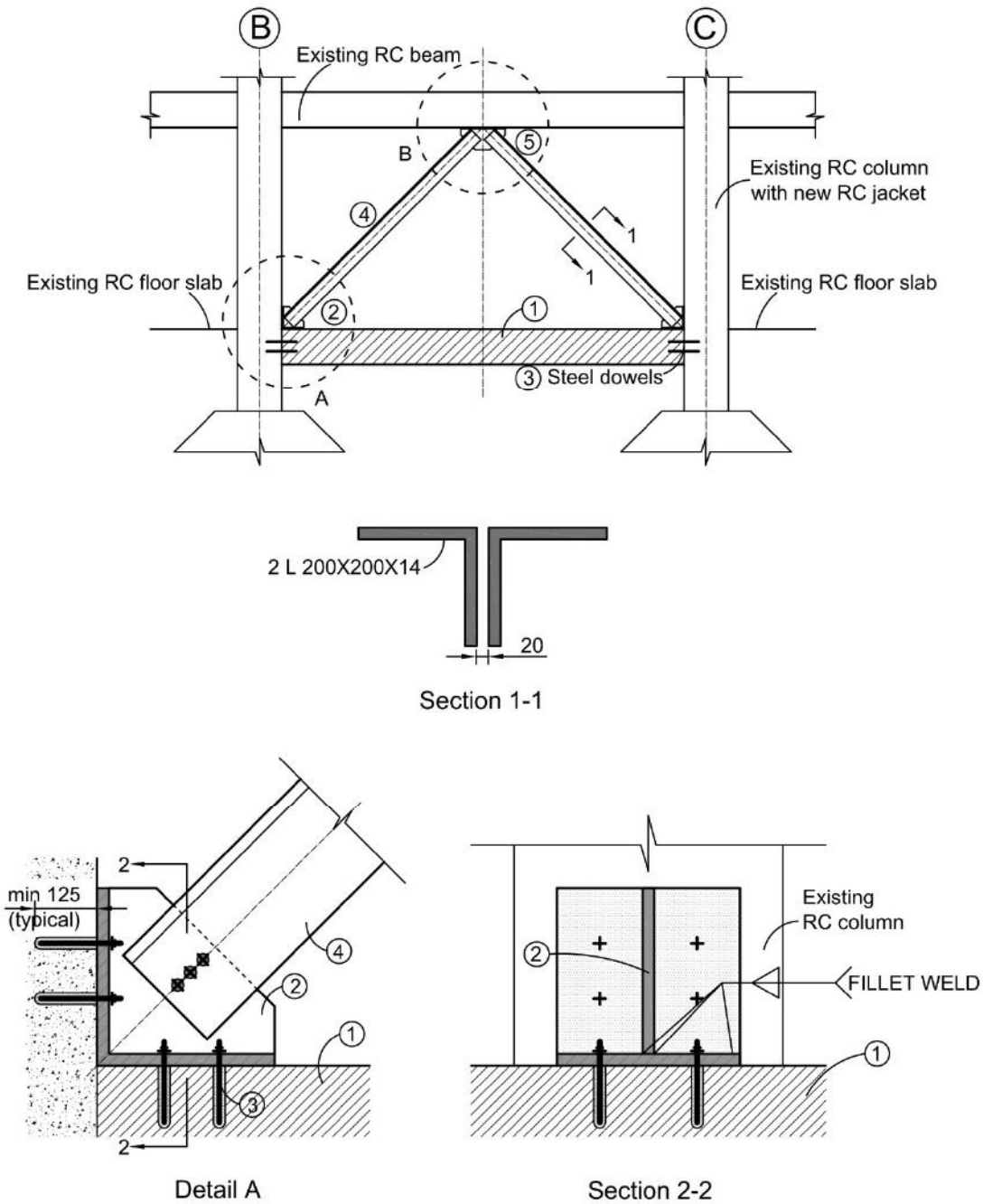

Figure 5-54. Construction details for a RC frame retrofitted with Chevron steel braces (RS2): 1-new RC tie-beam; 2 – new steel gusset plate for the brace-to-column connection; 3 – steel anchors for brace-to-concrete connections (various locations); 4 – new double-angle steel braces; 5 – new steel gusset plate for the brace-to-beam connection.

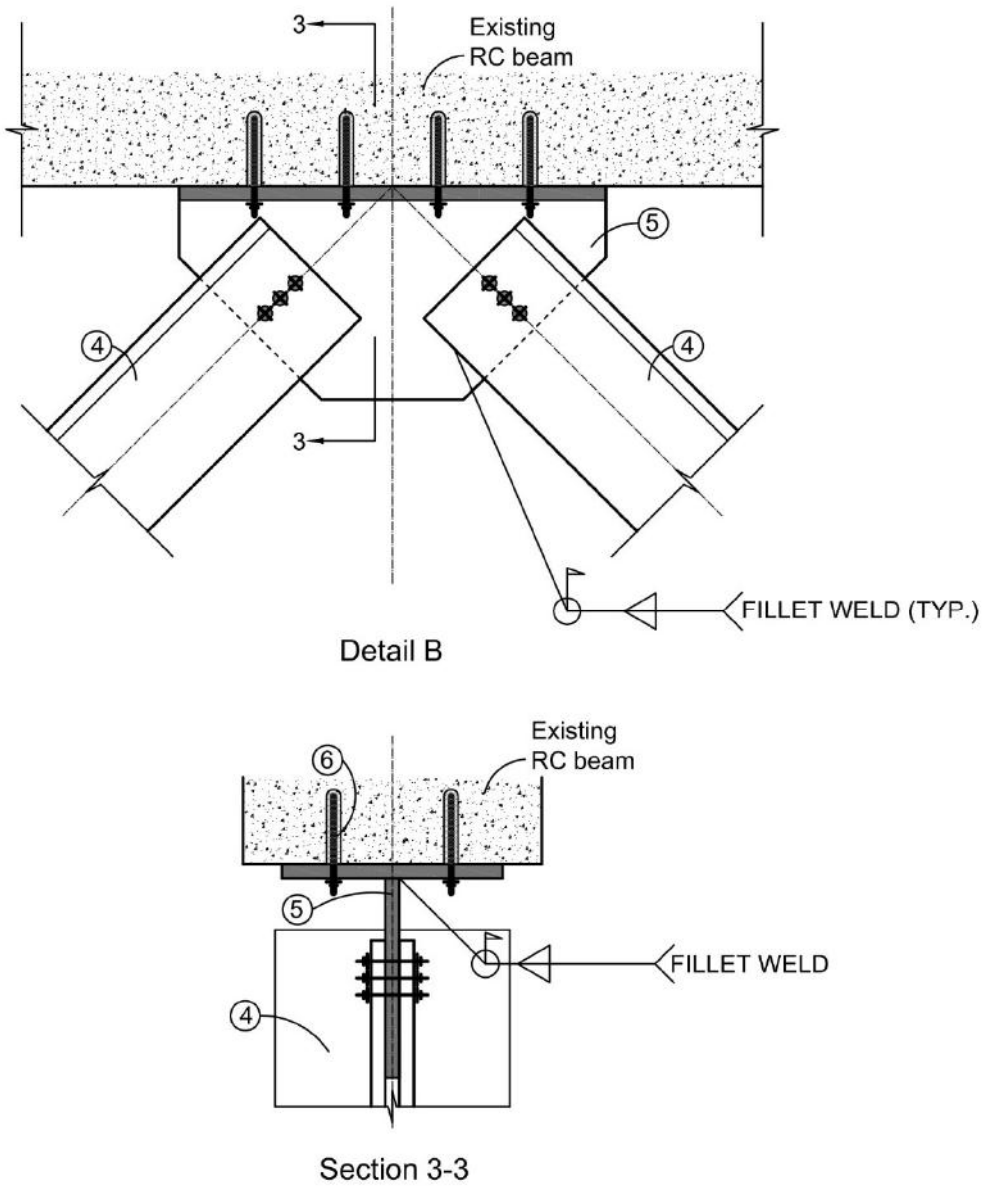

Figure 5-54 (continued)

5.7 Retrofit Scheme 3 (RS3): New RC Shear Walls

5.7.1 An overview of the retrofit scheme

The proposed retrofit scheme RS3 consists of constructing new RC shear walls at selected locations within a building (in both directions), as shown in *Figure 5-55*.

The strategy for selecting wall layout was to construct the walls at the exterior of the building to minimize the disruption during the construction. However, a few new walls are also required in the interior of the building. Ideally, these interior walls should be placed at the locations of existing partition walls. Note that some of the existing windows will need to be removed as a result of constructing some of the exterior shear walls.

All RC shear walls are 200 mm thick. There are 2 wall configurations, as shown in *Figure 5-56*. In some cases, new RC shear walls are constructed between the adjacent columns, e.g. a wall aligned along grid A between grids 2 and 3. In other cases, new RC shear walls are placed on each side of a column, e.g. at intersection of grids B and 1. New shear walls are separated from the existing RC columns by a 20 mm gap. This has been done to avoid the provision of horizontal bars (dowels) which would be required to connect the new walls to the existing RC columns.

The walls need to be continuous up the building height, hence it is required to drill holes through the existing RC beams at each floor.

This retrofit scheme requires the construction of foundations for new shear walls.

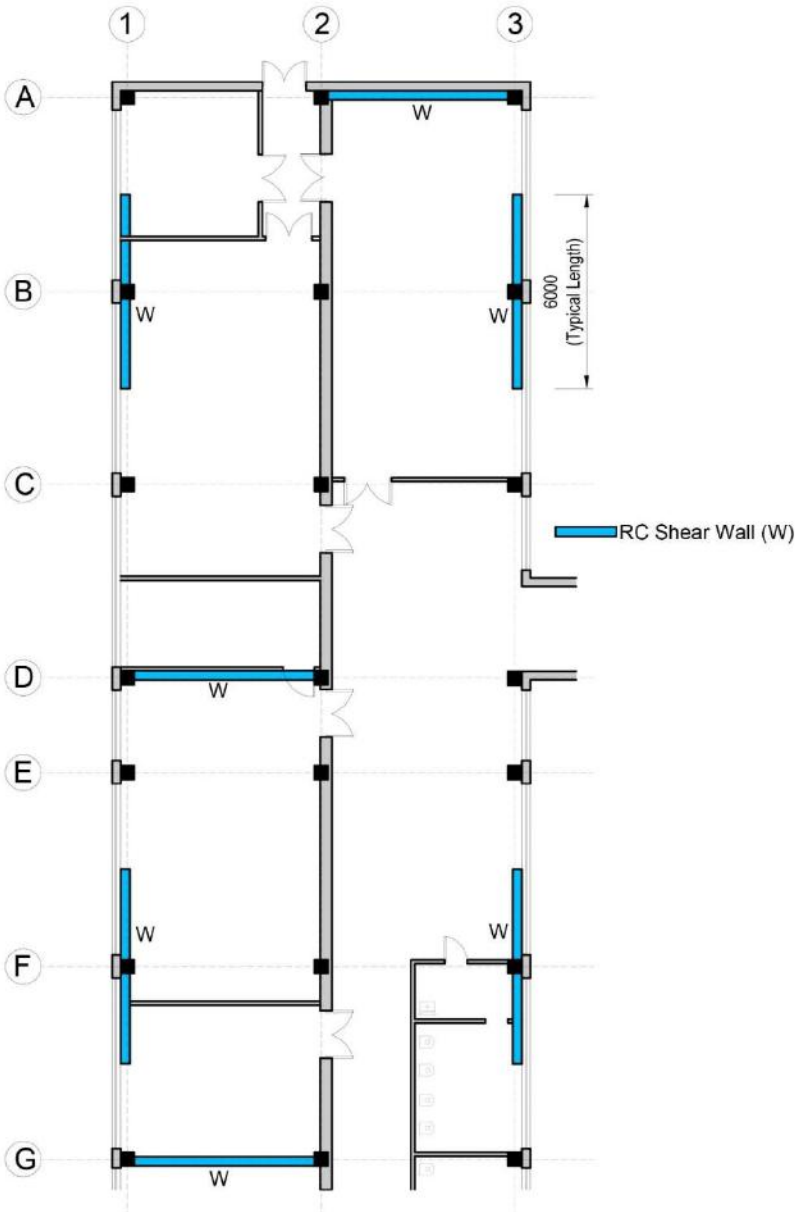

Figure 5-55. Floor plan of the retrofitted building with RC shear walls (RS3).

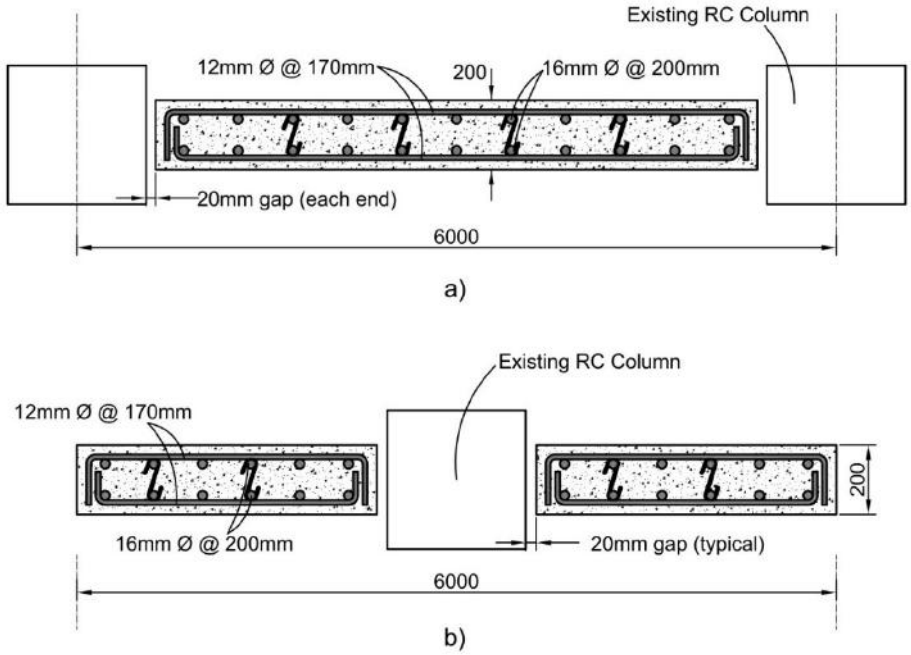

Figure 5-56. Typical RC shear wall geometry and reinforcement (RS3): a) a 6 m long wall between two adjacent columns and b) a 3 m long wall at each side of the column.

5.7.2 Numerical model

Numerical model for this retrofit scheme is similar to the model used for the analysis of existing building, except that new shear walls are added at specified locations. For linear elastic analysis purposes shear walls were modelled as 2-D plate elements (see *Figure 5-57*). An equivalent 2-D frame model was used for modelling RC shear walls for nonlinear pushover analysis. A shear wall was modelled as an equivalent column with cross-sectional dimensions corresponding to the wall. For analysis purposes all walls were taken as 6000 mm long and 200 mm thick. However, in practice some of the walls are 3000 mm long due to the presence of existing RC columns. For example, the wall at intersection of grids 1 and B is 6000 mm long, but it has been divided into two 3000 mm long walls (one at each side of the column), see *Figure 5-56*.

The wall base support conditions were considered as fixed for both the linear elastic and nonlinear analysis purposes. Soil-structure interaction at the foundation level was not considered in the analysis. This assumption was taken considering the wall geometry, particularly the height/length ratio (which is approximately equal to 1.0) and the fact that the wall height is rather small in low-rise buildings. It is not expected that significant lateral displacements at the roof level would develop due to the foundation rotation resulting from the soil-structure interaction. It is acknowledged that the internal forces and displacements might be somewhat different, but the overall conclusions of the analysis would remain unchanged in this case. However, the effect of soil-structure interaction may be significant in taller buildings (depending on the soil conditions) and should be considered in the analysis.

A 2-D equivalent frame model for Frame 1 is shown in *Figure 5-58* and an equivalent frame model for frame D is shown in *Figure 5-59*. Note that Frame D was considered for nonlinear analysis because it contains a RC shear wall. Frame B was considered for the capacity evaluation of the retrofitted building (linear elastic analysis) for consistency with other retrofit schemes considered in the study.

Concrete properties for the new shear walls are summarized in *Table 5-24*, while steel properties are summarized in *Table 5-25*.

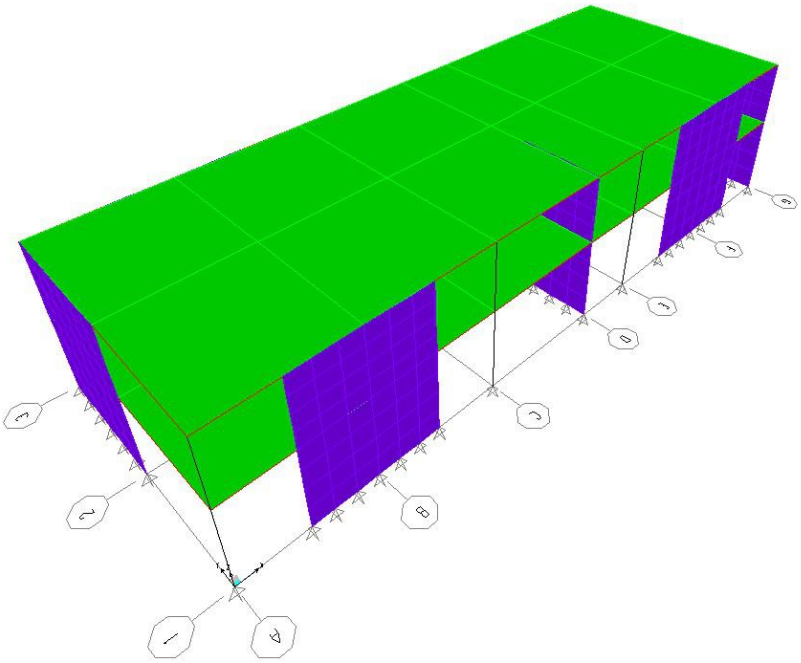

Figure 5-57. A 3-D numerical model of a retrofitted building with RC shear walls (RS3).

Table 5-24. Concrete Properties: RC Shear Walls
Concrete: Grade B30

No.	Property	Unit	Value
1	Modulus of elasticity	GPa	32.5
2	Design axial compression strength	MPa	22
3	Normative axial tensile strength	MPa	1.75
4	Mass density (2500 * 1.1)	kg/m^3	2750

Table 5-25. Steel Properties: RC Shear Walls
Steel: Horizontal and vertical reinforcement Grade A-III

No.	Property	Unit	Value
1	Modulus of elasticity	t/m^2	$2.0x10^7$
2	Design tensile strength	t/m^2	37500

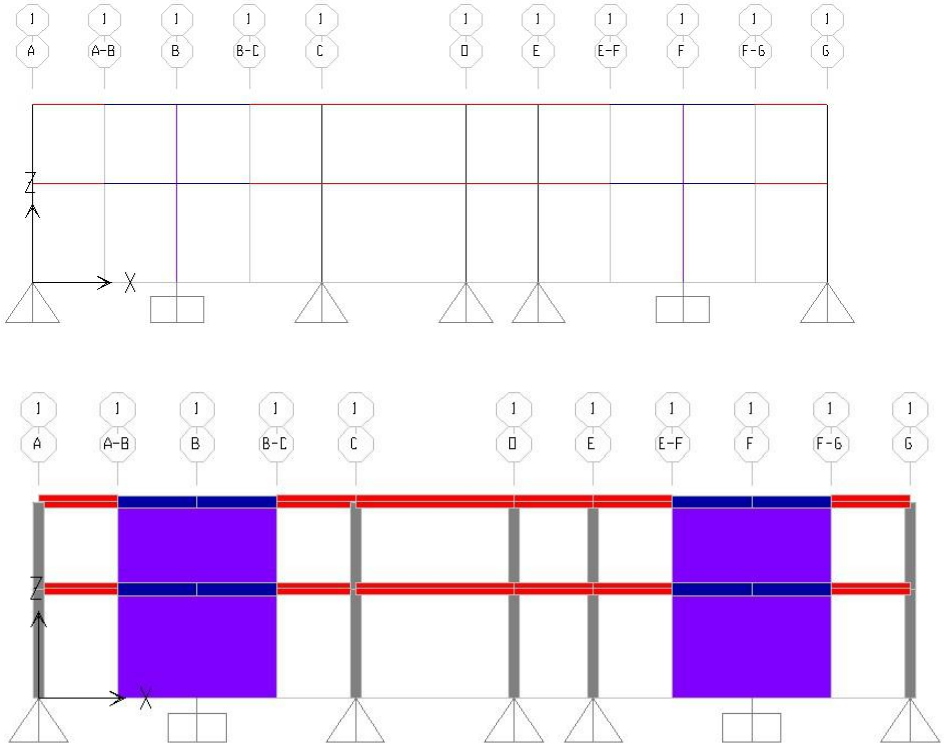

Figure 5-58. A 2-D numerical model of the retrofitted building (RS3): Frame 1 (RC shear walls shown in purple color).

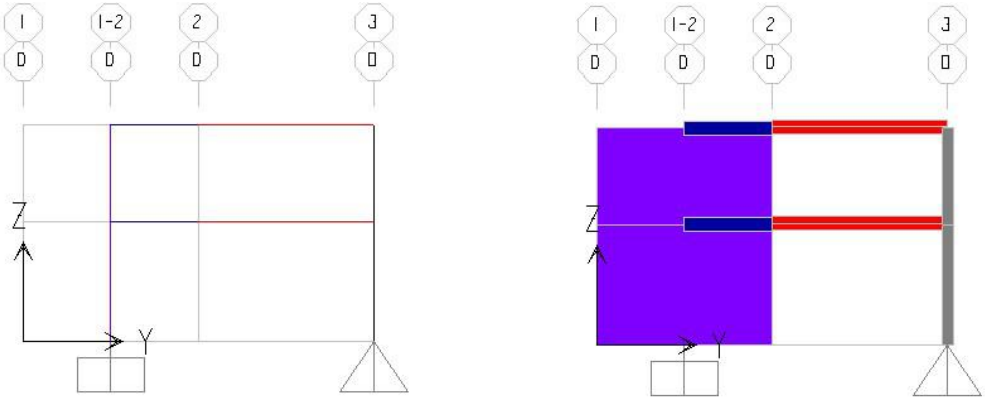

Figure 5-59. A 2-D numerical model of the retrofitted building (RS3): Frame D (RC shear wall shown in purple color).

5.7.3 Linear elastic analysis (Spectral Method)

5.7.3.1 Dynamic properties

Vibration periods for the existing and the retrofitted building are shown in Table 5-26. It can be seen that the retrofitted building is very stiff due to the presence of RC shear walls. For example, fundamental period in Y-direction is 1.15 sec for the existing building and 0.14 sec for the retrofitted building.

Table 5-26. Vibration periods for the existing and the retrofitted building with RC shear walls (RS3)

	Existing (pinned supports)	Retrofitted
Mode	Period (sec)	
1 (Y-dir)	1.153	0.143
2 (X-dir)	1.115	0.122
3	1.034	0.119
4	0.211	0.115
5	0.204	0.114
6	0.189	0.109
7	0.127	0.108
8	0.124	0.105
9	0.123	0.105
10	0.121	0.104
11	0.118	0.102
12	0.115	0.101

5.7.3.2 Capacity evaluation of the retrofitted building: seismic demand (D) and capacity (C)

The evaluation of seismic forces is presented for Frame 1 in longitudinal (X) direction and Frame B in transverse (Y) direction (Figure 5-60). Seismic demand (**D**) values were obtained from the linear elastic analysis. The beam, column, and shear wall capacities (**C**) were calculated according to СНиП 52-01-2003 provisions for the Limit States Design Method. It should be noted that the beam capacities are the same as for the existing building. A summary of **C** and **D** values at the selected sections are presented in
Table 5-27 and 5-28. It can be seen that **C/D** ratios at all locations are satisfactory (values higher than 1.0). It can be concluded that retrofit scheme RS3 is fully effective in enhancing the lateral capacity of the existing building to the level required by СНиП КР 20-02:2009.

Table 5-27. Seismic demand D and capacity C for RS3: Frame 1 in Longitudinal (X) Direction

Joint	Demand D: internal forces from analysis			Capacity C (СНиП)		Capacity/Demand (C/D)	
	M3 (t·m)	N (t)	V2 (t)	M_{ult} (t·m)	Q_{ult} (t)	Bending	Shear
A	1.76	-12.30	0.44	21.52	28.65	12.23	65.12
B	3.31	-37.44	0.80	25.30	28.65	7.64	35.82
C	5.91	-2.91	3.82	20.05	28.65	3.39	7.50
D	9.65	-16.04	6.19	22.10	28.65	2.29	4.63
E	7.71	0.41	9.31	14.96	36.97	1.94	3.97
F	10.87	0.46	10.66	14.96	36.97	1.38	3.47
G	10.73	0.47	10.97	14.96	36.97	1.39	3.37

Table 5-28. Seismic demand D and capacity C for RS3: Frame B in Transverse (Y) Direction

Joint	Demand D: internal forces from analysis			Capacity C (СНиП)		Capacity/Demand (C/D)	
	M3 (t·m)	N (t)	V2 (t)	M_{ult} (t·m)	Q_{ult} (t)	Bending	Shear
A	2.39	-97.17	0.58	29.26	28.65	12.24	49.40
C	1.35	-51.02	0.92	26.84	28.65	19.88	31.15
E	2.17	0.62	1.61	14.96	36.97	6.89	22.96
F	2.17	0.57	1.61	14.96	36.97	6.89	22.96
G	4.27	0.51	2.15	14.96	36.97	3.50	17.19

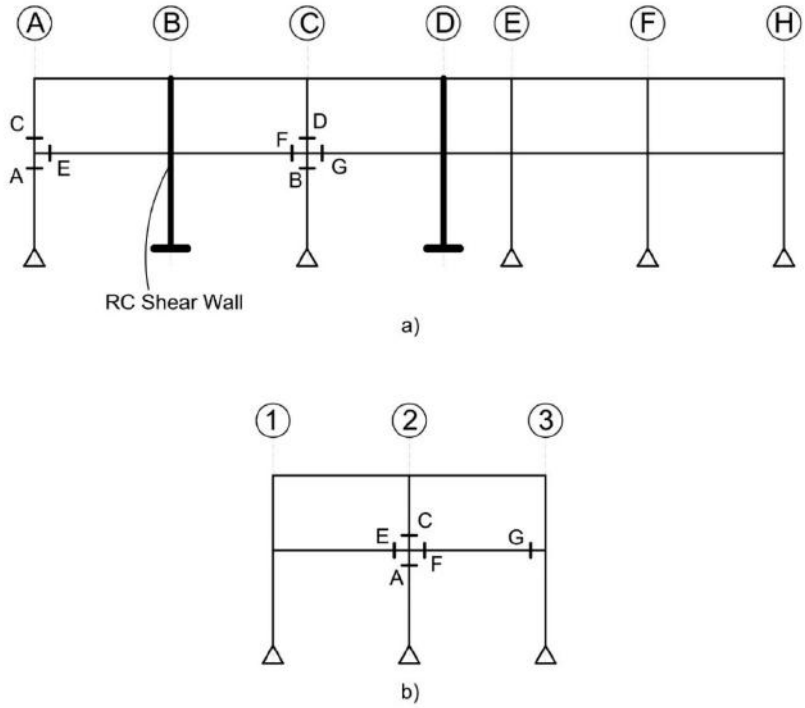

Figure 5-60. Reference frames for seismic evaluation of the retrofitted building (RS3): a) Frame 1 and b) Frame B.

The seismic base shear force for each direction of seismic loading was obtained as a sum of the support reactions at each column location (*Table 5-29*). The ratio of seismic base shear force and total seismic weight (ΣQ=1360 t), $S_{x/y}/\Sigma Q$, is also shown in the table. It can be seen that the ratio for retrofitted structure (0.55 and 0.57 for X- and Y-direction respectively) is similar to the existing structure (0.53 and 0.50 for X- and Y-direction respectively).

Table 5-29. Seismic base shear for the existing and the retrofitted building with RC shear walls (RS3)

	S_x (tonf)	$S_x/\Sigma Q$	S_y (tonf)	$S_y/\Sigma Q$
Existing (pinned supports)	717.79	0.53	684.91	0.50
Retrofitted (RS3)	742.02	0.55	770.64	0.57

5.7.3.3 Displacements

Interstory seismic displacements for each horizontal direction (X and Y) at each floor level were obtained from the analysis. These displacements were compared with the limits set by paragraph 5.4.3 of СНиП КР 20-02:2009. The results are summarized in Table 5-30. It can be seen that the retrofit was effective in reducing displacements in both directions, so that the СНиП КР 20-02:2009 displacement limits have been met. In conclusion, retrofit scheme RS3 is effective in controlling lateral displacements in the building.

Table 5-30. Seismic Interstory Displacements for RS3: Spectral Method

	Level	Displacements		СНиП КР 20-02:2009 Displacement Limits	Difference	
		Δ_{kX} (mm)	Δ_{kY} (mm)	Δ_{max} (mm)	X-direction (mm) (% exceedance)	Y-direction (mm) (% exceedance)
Existing (pinned supports)	Roof	23.8	27.6	19.8	+4.0 (+20.2%)	+7.8 (+39.3%)
	Level 1	154.3	157.8	24.7	+129.6 (+525%)	+133.1 (+539%)
Retrofitted (RS3)	Roof	1.3	1.9	19.8	-23.4(-93.4%)	-22.8 (-90.4%)
	Level 1	1.3	1.9	24.7	-23.4 (-94.7%)	-22.8 (-92.3%)

5.7.4 Nonlinear static (pushover) analysis

This section presents input for the pushover analysis of the retrofitted structure and the key results.

5.7.4.1 Numerical models for pushover analysis

Pushover analysis was performed on two-dimensional (2-D) models: Frame 1 in longitudinal (X) direction (*Figure 5-58*), and Frame D in transverse (Y) direction (*Figure 5-59*). Model properties (geometry, cross-sections, and materials) are the same as for linear elastic analysis (see Section 5.7.2). Nonlinear characteristics of structural members used in the pushover analysis are explained next.

5.7.4.2 Plastic hinge properties for RC shear wall sections

Plastic hinges for beam and column sections are the same as for the existing building (see Section 5.3.2.2). Plastic hinge characteristics for the RC shear wall sections were developed for the following cases: i) axial load plus bending, and ii) shear, as shown in *Figure 5-61*. The values for IO, LS, and CP performance levels were adopted from ASCE/SEI 41-13 (ASCE 2014). The moment and shear capacities for RC shear walls were determined according to СП 63.13330.2012. Moment and shear plastic hinge characteristics for RC shear walls in Frame 1 are shown in *Figure 5-62*, and the properties for shear walls in Frame D are shown in *Figure 5-63*.

Plastic hinge length for RC shear walls was taken as 0.5*L*, where *L* is the wall length. Typical plastic hinge locations for Frame 1 are shown in *Figure 5-64*.

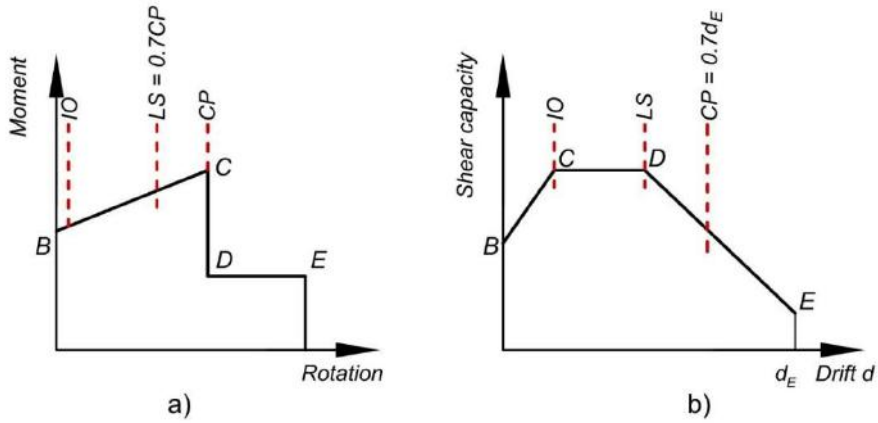

Figure 5-61. Conceptual plastic hinge characteristics for RC shear wall: a) moment plus axial load, and b) shear.

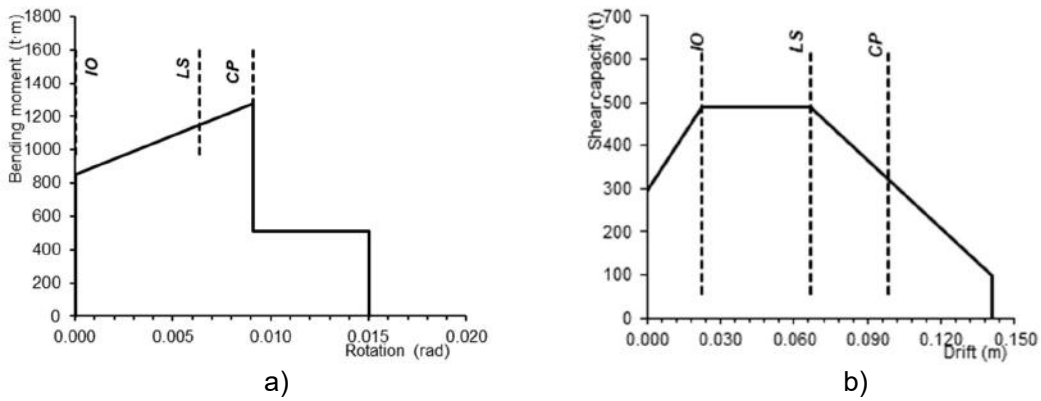

Figure 5-62. Plastic hinge properties for RC shear wall - Frame 1: a) moment hinge (WH-M3), and b) shear hinge (WH-MV2).

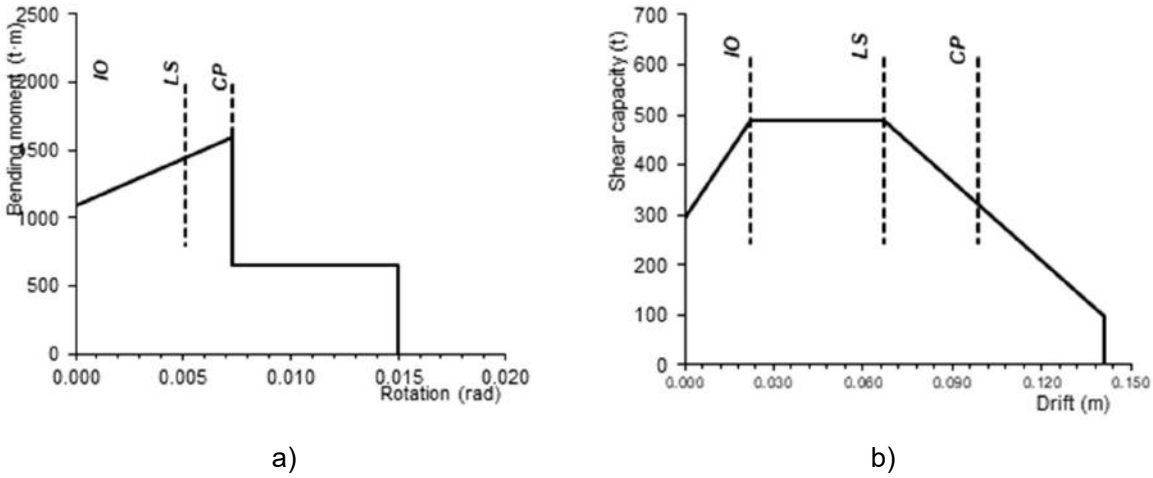

Figure 5-63. Plastic hinge properties for RC shear wall - Frame D: a) moment hinge (WH-M3), and b) shear hinge (WH-MV2).

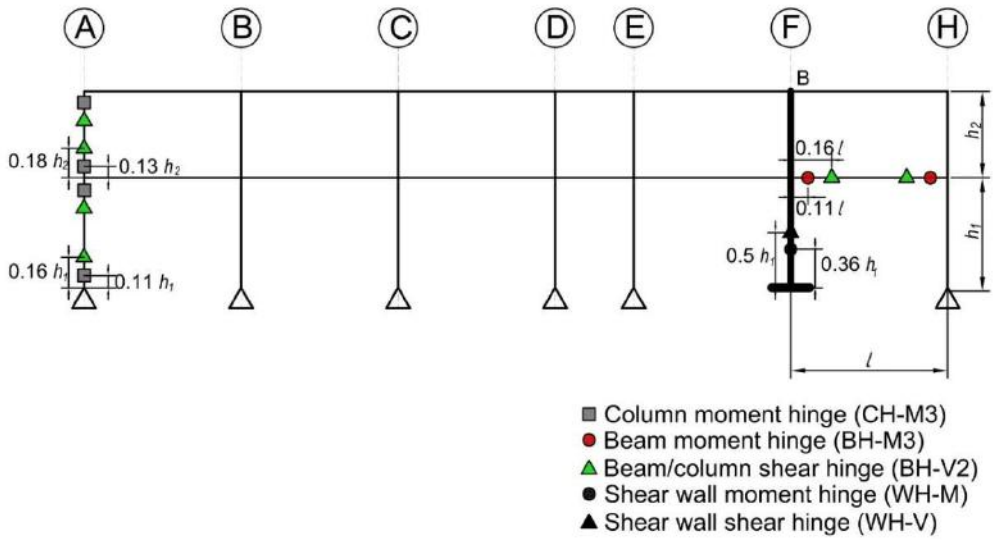

Figure 5-64. Frame 1 model showing plastic hinge locations (RS3).

5.7.4.3 The results of pushover analysis

The pushover analysis was performed on two 2-D frame models (Frame 1 and Frame D) which were subjected to constant gravity loading and increasing lateral loading (in the same manner as for the existing building). The target displacement was calculated based on ASCE/SEI 41-13 (ASCE 2014), using the fundamental period of the retrofitted structure T_i for X and Y directions.

For the retrofitted building, the following values of target displacement have been calculated:
X-direction: $\delta_{tx} = 8$ mm for $T_i = 0.122$ sec
Y-direction: $\delta_{ty} = 11$ mm for $T_i = 0.143$ sec

Capacity Curve (CC) for frame 1 is shown in *Figure 5-65*, while the CC for frame B is shown in *Figure 5-66*. Each chart shows two CCs – one for each load pattern (LP1 and LP2). It can be seen that LP1 is more critical for both frames, because it gives lower inelastic forces and displacements at failure than LP2.

It can be observed from the CCs that the maximum base shear force capacity corresponds to relatively small lateral displacements of the frames, e.g. 31 mm for Frame 1 and 51 mm for frame B. These displacements are relatively small due to a significant increase in the lateral frame stiffness as a result of the new RC shear walls. The retrofitted structure shows a ductile performance and an increase in the capacity compared to the existing structure. For example, peak base shear capacity for Frame 1 in the existing building is 50.96 t (*Figure 5-20*) as opposed to 656.51 t in the retrofitted building (*Figure 5-65*).

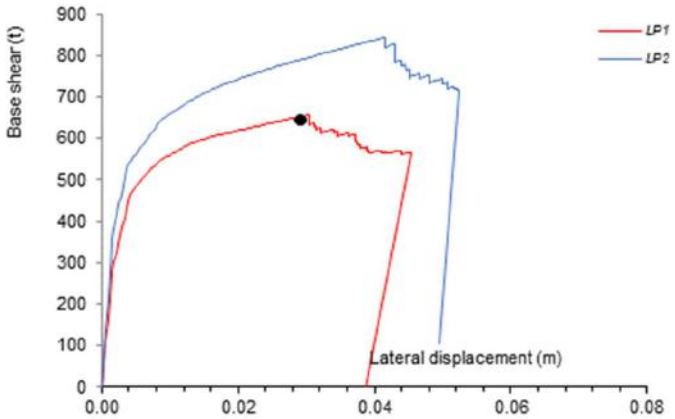

Figure 5-65. Capacity curve for Frame 1 (RS3) (LP1: maximum force 656.51 t and the corresponding displacement 31 mm).

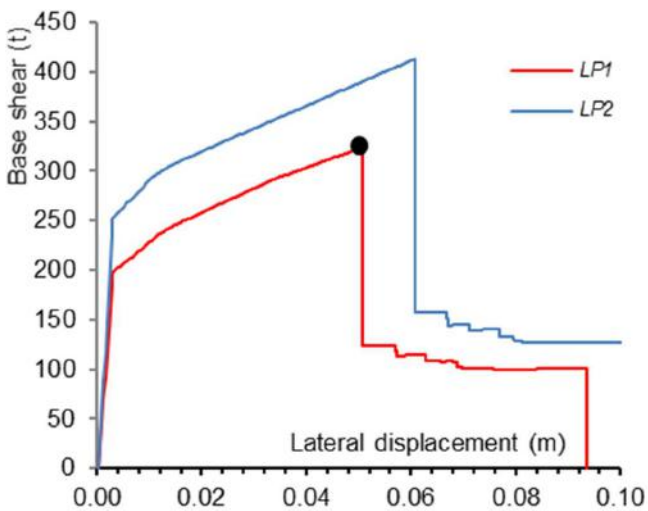

Figure 5-66. Capacity curve for Frame D (RS3) (LP1: max force 323.79 t and the corresponding displacement 51 mm).

Deformed shape for Frame 1 at the peak shear capacity (denoted by black circle in *Figure 5-65*) is shown in Figure 5-67a). It can be seen that moment plastic hinges developed in the beams, and most of them are at the LS performance level. Plastic hinges also developed in the shear walls (equivalent columns). Frame D showed a similar failure mechanism, as illustrated by deformed shape shown in Figure 5-67b). At the target displacement expected at the design earthquake according to СНиП КР 20-02:2009 (8 and 11 mm in X- and Y-direction respectively), these frames would show IO performance level; this could be seen from the deformed shape plots at the target displacement level (not included in this publication).

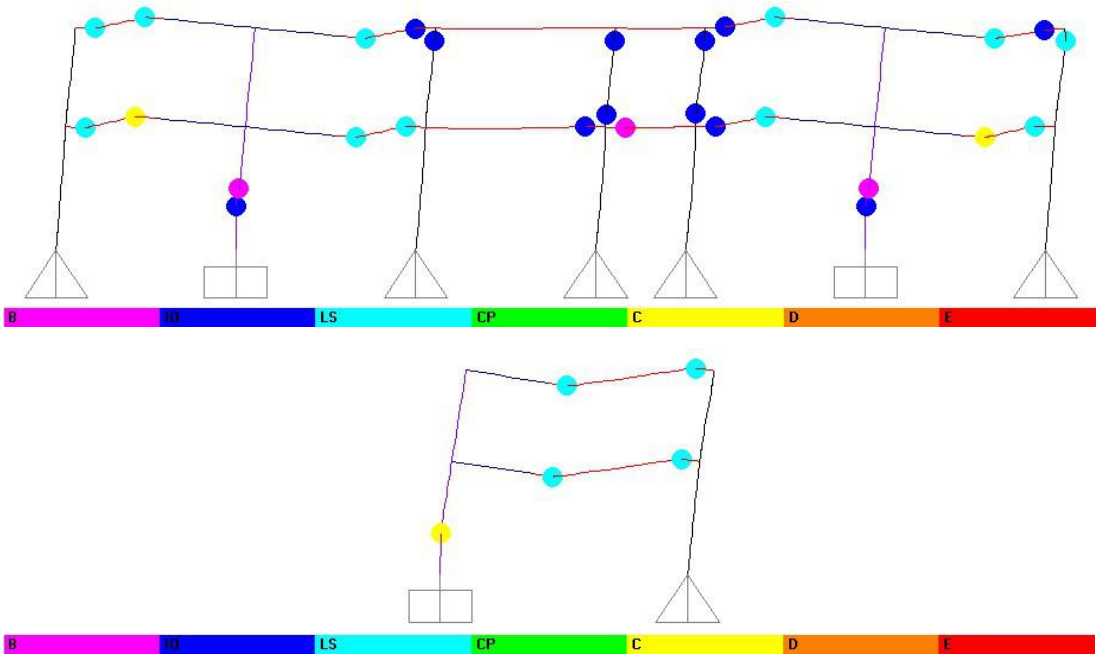

Figure 5-67. Deformed shape for RS3, load pattern LP1, at the maximum shear capacity (labelled with black solid circle on the capacity curves): a) Frame 1 (displacement 31 mm and b) Frame D (displacement 51 mm).

5.7.5 Design of new RC shear walls and foundations

Design of RC shear walls was performed according to СП 63.13330.2012. The design needs to take into account the effect of 1) axial load and bending moments, and 2) shear forces.

Cross-section for determining the resistance of an RC shear wall for the combined effect of axial load and bending is shown in *Figure 5-68*. The resistance for axial load and bending was determined according to СП 63.13330.2012 Clause 8.1.53. The shear resistance of RC shear wall was determined according to СП 63.13330.2012 Clause 8.1.55.

This retrofit scheme will require the construction of new foundations for RC shear walls. These foundations are to be designed for combined effects of axial load, bending, and shear – based on the design forces at the base of the wall. The foundations need to be designed according to СП 63.13330.2012 Clauses 8.1.53 and 10.4.1. The intention is to construct the wall (strip) footings. There is a possibility that the design shear force in the wall exceeds the shear resistance at the foundation-soil interface, in which case a shear key may need to be constructed at the base of the foundation. Also, soil anchors may need to be provided to resist the effect of high overturning moments at the base of the wall. Refer to Chapter 4 for a discussion on the foundation solutions for shear wall retrofit scheme.

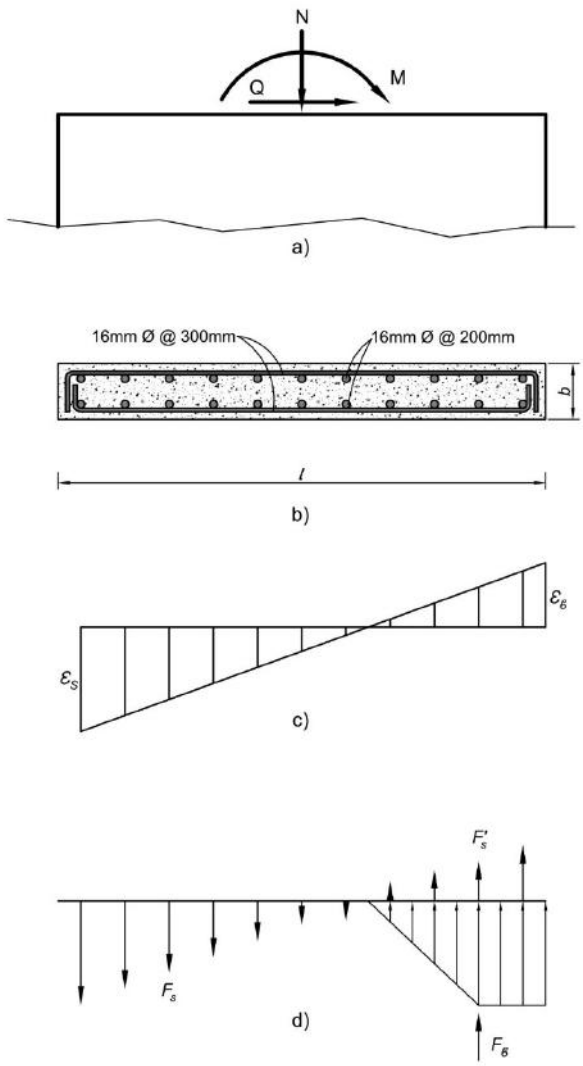

Figure 5-68. RC shear wall subjected to shear force, axial load and bending: a) wall elevation showing design forces; b) wall cross-section; c) strain distribution, and d) distribution of internal forces.

5.7.6 Typical construction details: RS3

Construction details for RS3 are illustrated in *Figure 5-69*. The drawing shows all relevant details of the RC shear wall construction. Typical wall cross-section for a 6 m wall layout is shown in Section 1-1. The foundation is shown in Section 2-2 and the connection to the existing RC beam is shown in Section 3-3. Construction details are applicable to alternative wall configuration (two 3 m long walls on each side of the existing RC column).

5.7.7 Construction procedure: RS3

The retrofit scheme RS3 involves the construction of new RC shear walls and the foundations. The construction procedure is summarized below (see *Figure 5-69*):

1. Construct new RC foundation at the base of each shear wall. The foundation needs to be bonded to the footings of adjacent existing RC columns. The surfaces of existing columns which are in contact with the new foundation need to be cleaned of dirt and sandblasted.
2. Construct new RC shear walls above the foundation separated by a 20 mm gap from the adjacent existing columns. Vertical wall reinforcement needs to extend from the bottom

of the new foundation (see Section 2-2, *Figure 5-69*). Vertical bars at the ends need to be embedded into the existing column footing. The holes are to be drilled and filled with epoxy grout. A minimum 125 mm embedment depth is required.

3. The vertical wall reinforcement needs to be continuous from the foundation to the roof. Vertical steel bars (dowels) need to be embedded into the existing beam, both underneath the beam (to connect with the ground floor reinforcement) and above the beam (to ensure continuity with the first floor reinforcement). The holes are to be drilled and filled with epoxy grout. A minimum 125 mm embedment depth is required.

5.7.8 Construction cost estimates: RS3

Table 5-31. Construction cost estimates: RS3

#	Item	Unit	Quantity	Unit price (KGS)	Total price (KGS)	Remarks
Material cost for RC shear wall (for 1 m^2 of the wall area)						
1	Procurement of reinforcing steel bars AIII, 12 mm diameter	kg	6.17	48	296.2	
2	Procurement of reinforcing steel bars AIII, 16 mm diameter	kg	15.8	46	726.8	
3	Procurement of concrete grade B30 with a 200 mm wall thickness	m^3	0.2	3255	651.0	
4	Procurement of formwork (chipboard + wooden beam + screws + nails)	m^2	2	362	724.0	
5	Procurement of repair mortar based on epoxy resins and mineral aggregates.	Liter	0.1	1120	112.0	The price assumes use of local products (not imported)
6	Total material cost for 1 m^2 of the wall area (KGS)					2510.0
Material cost for the wall foundation (for 1 m length)						
7	Procurement of reinforcing steel bars AIII, 12 mm diameter	kg	3.70	48	177.70	
8	Procurement of reinforcing steel bars AIII, 18 mm diameter	kg	26.00	46	1196.0	
9	Procurement of concrete grade B15 for basement section 700 mm * 500 mm	m^3	0.35	2495	873.30	
10	Procurement of formwork (chipboard + wooden beam + screws + nails)	m^2	1.50	362	543.0	

11	Total material cost for 1 meter of the foundation length (KGS)	2789.9				
Construction cost for RC shear wall (for 1 m^2 of the wall area)						
12	Installation of reinforcing bars in finished holes with strapping transverse reinforcement with the use of a solution on an epoxy basis and pouring a concrete mixture.	m^3	0.2	3000	600.0	
13	Transportation and other expenses	kg	1	120	120.0	
14	Total construction cost for 1 m^2 of the wall area					720.0
Construction cost for the wall foundation (for 1 meter length)						
15	Preparation of the foundation for a new foundation (soil development + compaction + sandblasting)	m^3	0.72	550	396.0	
16	Construction of a new reinforced concrete foundation (assembling of formwork + assembly of reinforcing rods strapping + pouring of concrete mix)	m^3	0.4	1800	720.0	
17	Transportation and other expenses	kg	100	1	100.0	
18	Total construction cost for 1 meter length of the wall foundation (KGS)					1216.0
19	Total cost for the wall foundation (KGS)	m	39.2	4005.9	157033.10	
20	Total cost for 1 shear wall (KGS)	m^2	294.0	3230.0	949608.47	
Total cost						
			Total built-up area (m^2)		Total cost (entire building)	Total cost (m^2)
21	Total cost (KGS)		828.0		1106641.3	1336.0
22	Total cost (USD)				16038.3	19.4

Notes:
1. The average wall length has been taken as 5600 mm
3. Building plan dimensions are: 33.4m * 12.4m
4. Assumed exchange rate: 1 USD= 69 KGS

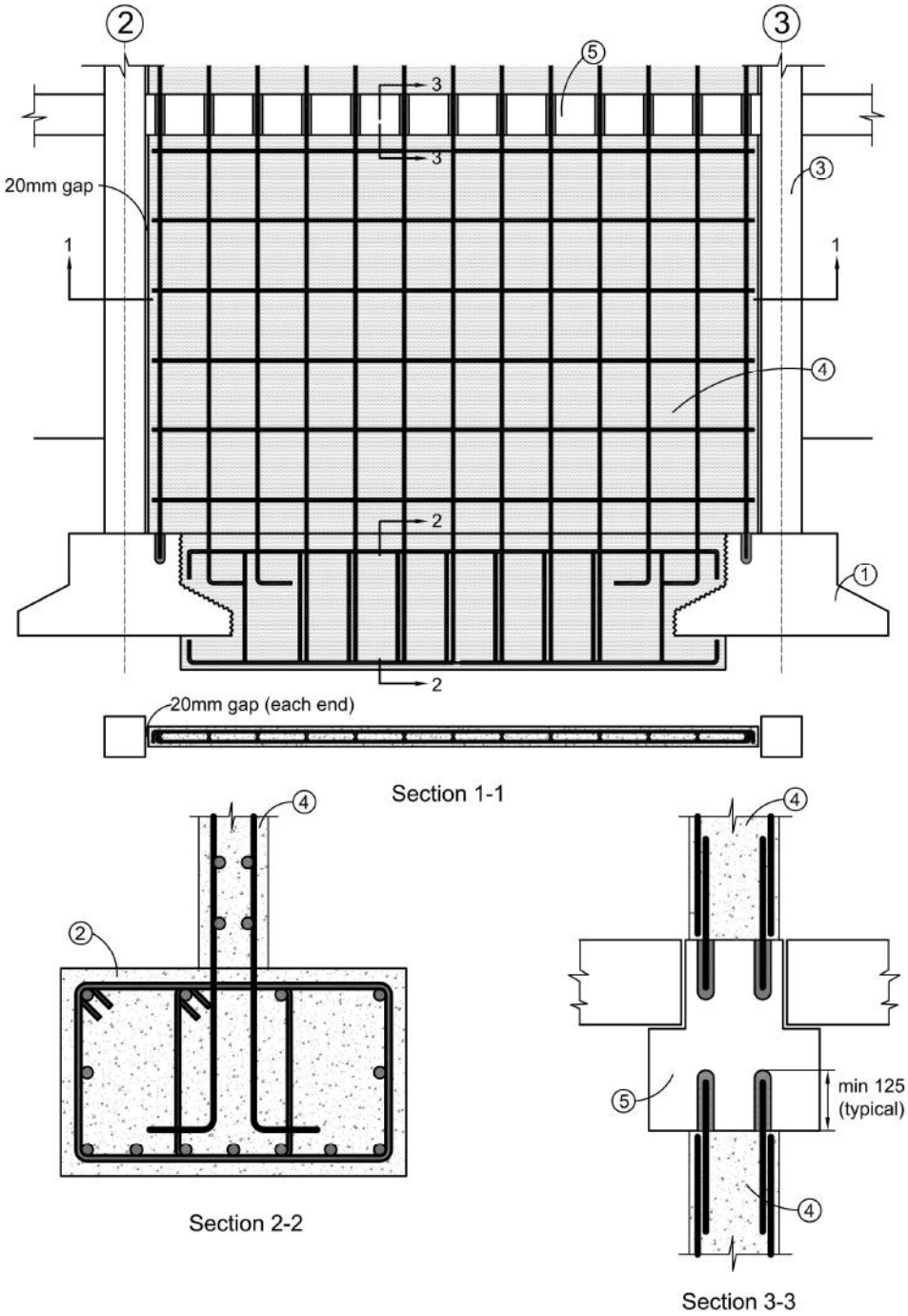

Figure 5-69. Construction details for a RC frame retrofitted with RC shear walls (RS3): 1 - existing column footing; 2 – new foundation for RC shear wall; 3 – existing RC column; 4 – new RC shear wall; 5 – existing RC beam.

5.8 A Comparison of Retrofit Schemes RS1, RS2, and RS3

The following 3 retrofit schemes (RS) have been considered in this case study:

- RS1: RC jacketing of the existing columns
- RS2: RC jacketing of the existing columns plus new steel braces

- RS3: New RC shear walls

These retrofit schemes can be compared in terms of the extent to which they are able to enhance the capacity and ductility of the existing structure to sustain seismic effects. It is also important to ensure that a retrofit scheme is effective in controlling lateral displacements to meet СНиП КР 20-02:2009 requirements. The results of seismic analyses for each retrofit scheme were presented earlier in this chapter. The conclusions, summarized in *Table 5-32*, are based on the results of linear elastic analysis according to СНиП КР 20-02:2009. It can be seen from the table that only RS3 (retrofit scheme involving the construction of new shear walls) meets both the capacity and the displacement requirements. As a result, retrofit scheme RS3 is recommended to be used for this project.

Table 5-32. Effectiveness of Retrofit Schemes RS1, RS2, and RS3: Comparison

Retrofit Scheme	Capacity/Demand C/D ≥ 1.0	Displacements within СНиП КР 20-02:2009 limits	Ductility level[a]
RS1	No	No	3
RS2	No	Yes	1
RS3	Yes	Yes	2

Note: a – Ductility level: 1- low; 2 – moderate; 3 – high

The results of nonlinear static (pushover) analysis can also be used for the comparison. Capacity curves for the existing building and various retrofit schemes are presented in *Figure 5-70*. (These curves were presented earlier in this chapter in the sections discussing various retrofit schemes.) It can be seen that all retrofit schemes resulted in an enhanced capacity of the existing building. However, only retrofit scheme RS3 was effective in ensuring that all C/D ratios are higher than 1.0. It is expected that the retrofitted structure will show a moderately ductile performance, due to limited ductility potential of existing beams and columns. The existing beams and columns are expected to experience the same lateral displacements (drift) as the rest of the retrofitted structure, and must be capable of sustaining the resulting internal forces.

The considered seismic retrofit schemes can be also compared in terms of the construction cost (see Sections 5.5.8, 5.6.8 and 5.7.8). The construction cost estimates (per m^2 of the built-up area) were provided in this chapter, and they showed that the scheme RS3 is least expensive, with the unit cost KGS 1336 or USD 19.4 per m^2. Retrofit scheme RS2 is the most expensive of all (KGS 3998 or USD 58.0 per m^2), and the cost of RS1 is in between the other two schemes (KGS 2129 or USD 30.9 per m^2). The reason for the high cost of RS2 is because it combines column jacketing and new steel braces. Note that the cost of steel braces only is KGS 1869 (USD 27.1) per m^2. Therefore, if the retrofit included only steel braces the unit cost for the scheme RS2 would be less than RS1.

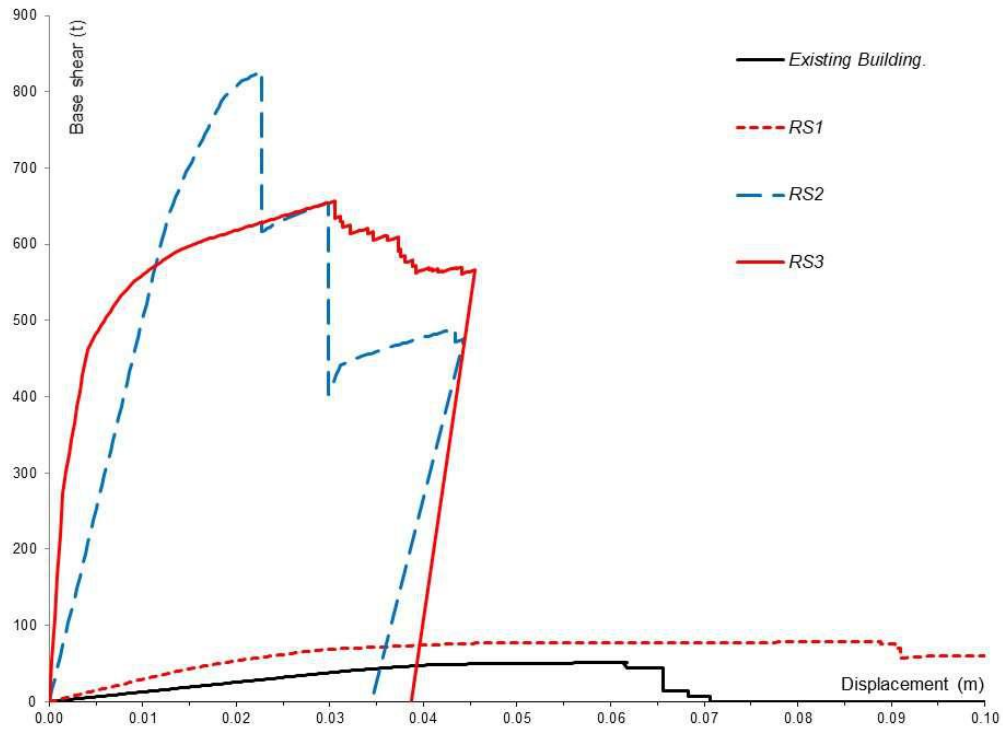

Figure 5-70. Capacity curves for Frame 1: existing building and retrofit schemes RS1, RS2, and RS3.

5.9 References

ASCE/SEI 41-13 (2014). Seismic Evaluation and Retrofit of Existing Buildings. ASCE standard ASCE/SEI 41-13, American Society of Civil Engineers, Reston, VA, USA.

EN 1998-3:2005 (2005). Eurocode 8: Design of structures for earthquake resistance – Part 3: Assessment and retrofitting of buildings and bridges. European Committee for Standardization, Brussels, Belgium.

ГОСТ10922-2012. Арматурные и закладные изделия, их сварные, вязаные и механические соединения для железобетонных конструкций (Welded reinforcing products and inserts, welded, lap and mechanical joints for reinforced concrete structures) (in Russian).

ГОСТ 14098-91. Соединения сварные арматуры и закладных изделий железобетонных конструкций (Welded joints of reinforcement and inserts for reinforced concrete structures) (in Russian).

Харьковский Промстройниипроект, НИИЖБ. (1992). Рекомендации по проектированию усиления железобетонных конструкций зданий и сооружений реконструируемых предприятий. Надземные конструкции и сооружения (Recommendations for Design of Reinforcement of RC Structures under Reconstruction. Aboveground Structures), Стройиздат, Москва, 191с (in Russian).

Промпроект (2017). Повышение сейсмической безопасности, энергоэффективности и капитальный ремонт пилотной школы №5 им. Ч. Айтматова г.Балыкчы. Проект городского развития «Улучшение сейсмической безопасности и энергоэффективности социальных инфраструктур в городах участниках». Стадия рабочий проект. Конструкции железобетонные 1722-1-КЖ. Проект адаптирован ОАО «Промпроект». (Improving Seismic Safety, Energy Efficiency and Capital Repairs of Pilot Aitmatov School No. 5 in Balykchy. Urban Development Project, Working Draft Stage, Reinforced Concrete Structures 1722-1-KZh, Adapted by Promproekt OJSC) Бишкек (in Russian).

СП 63.13330.2012. Бетонные и железобетонные конструкции (Concrete and Reinforced Concrete Structures – Basic Requirements) (in Russian).

СП 70.13330.2012. Несущие и ограждающие конструкции (Load-bearing and separating constructions) (in Russian).

СНиП 2.01.07-85*. Нагрузки и воздействия (The Loads) (in Russian).

СП 63.13330.2012. Бетонные и железобетонные конструкции (Concrete and Reinforced Concrete Structures – Basic Requirements) (in Russian).

СП 16.13330.2011. Стальные конструкции (Steel Structures) (in Russian).СП 52-103-2007. Железобетонные монолитные конструкции зданий (Concrete Monolithic Building Structures) (in Russian).

СНиП II-7-81. Строительство в сейсмических районах. Нормы проектирования (Construction in seismic areas. Design code) / Госстрой СССР. – М.: Стройиздат, 1982 – 48 с (in Russian).

6 Retrofit Case Study 2: Masonry School Building[1]

6.1 Building Description

The school complex was constructed in 1975 following a typical design #2c-02-26c developed by the Kyrgyz Giprostroy in 1964. The school has an H-shaped plan configuration (see Figure 6-1). It consists of 4 regular-shaped building blocks divided by separation joints (seismic gaps):

- Block A is a 3-story building with approximate plan dimensions of 73 m x 13 m (length x width).
- Block B has been divided into 2 sub-blocks (B1 and B2) with approximate plan dimensions of 67 m x 13 m (length x width). The blocks are separated by a joint (seismic gap). Block B1 is a 2-storey building and Block B2 is a 1-storey building with double floor height (hosting a gymnasium).
- Block C is a 2-storey building with approximate plan dimensions 30 m x 13 m (length x width).

These blocks have different functions. Block A is an educational block and contains several classrooms. Block B contains services and spaces for group activities and a gymnasium (Block B2). Block C is a connector block for Blocks A and B, and it also contains some administration space. The main entrance to the school is on the eastern side of Block C.

This chapter presents a detailed discussion on the seismic retrofit for Block A. Appendix C presents photographs which illustrate the implementation of construction activities performed under the school retrofit pilot project - a part of the World Bank's Urban Development Project.

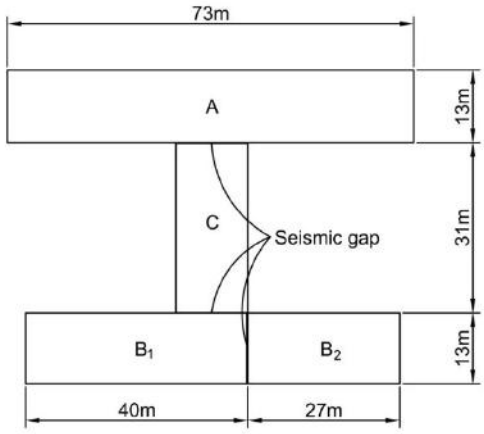

Figure 6-1. Building blocks.

As it can be seen from *Figure 6-2*, Block A has a symmetrical room distribution with regard to the horizontal axis. There are 11 classrooms at the first floor, 8 at the second floor and 10 at the third floor. These classrooms are connected by long hallways, which link them to the service rooms at the ends of the block, and the floors are connected by two central stairways.

[1] The content of this Chapter is based on the information provided by JV "ALL Ingegneria" & "AIRES Ingegneria (2017; 2017a) and Промпроект (2017).

Block A is rectangular-shaped 3-storey building and its overall height is 9.6 m, excluding the roof (based on 3.2 m story height). There are 3 longitudinal walls and 9 transverse walls in the building. There are large window and door openings, which are regular and vertically aligned.

The main lateral load-resisting system in the building consists of loadbearing masonry walls made of solid clay bricks bonded by cement-based mortar. Exterior walls are 51 cm thick and interior walls are 38 cm thick. The walls are supported by RC strip footing.

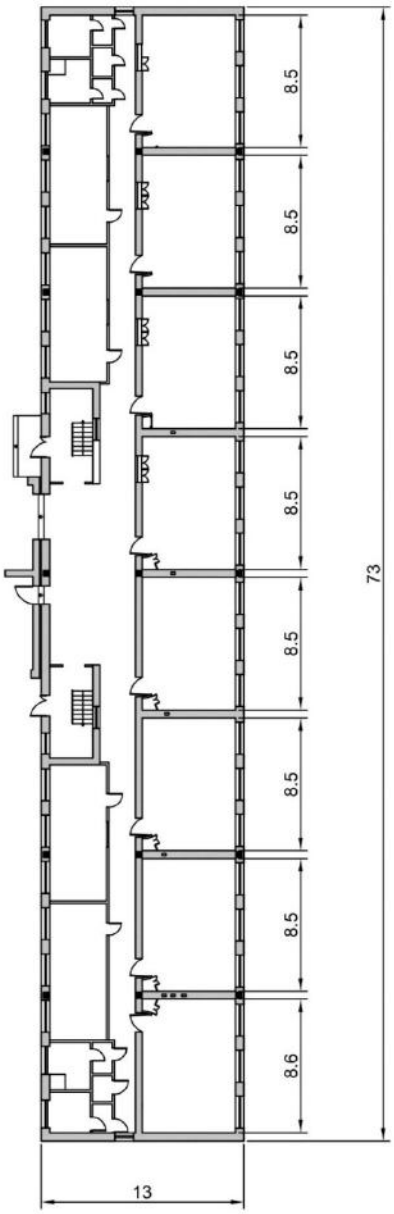

Figure 6-2. Block A (typical floor plan).

According to the original drawings there are two types of RC inclusions within the masonry walls (Figure 6-3a). First-order inclusions are RC column-like elements inside the masonry walls. These columns are connected with RC beams at the floor level in order to achieve RC

frames in transverse direction of the building (there are 5 first-order inclusions in Block A). The second-order inclusions consist of secondary RC vertical ties placed around the openings and at T- and L- wall intersections. Details of inclusions are shown in Figure 6-3b) and c). There are seismic bands and lintel beams at each floor level. Horizontal reinforcement in the form of 6 mm diameter bars is provided at the horizontal mortar joints in the masonry walls and their intersections (T- and L-intersections). There are 4 bars per mortar joint in 51 cm thick masonry walls and 2 bars per mortar joint in 38 cm thick walls. The bars are provided at vertical spacing of 30 cm.

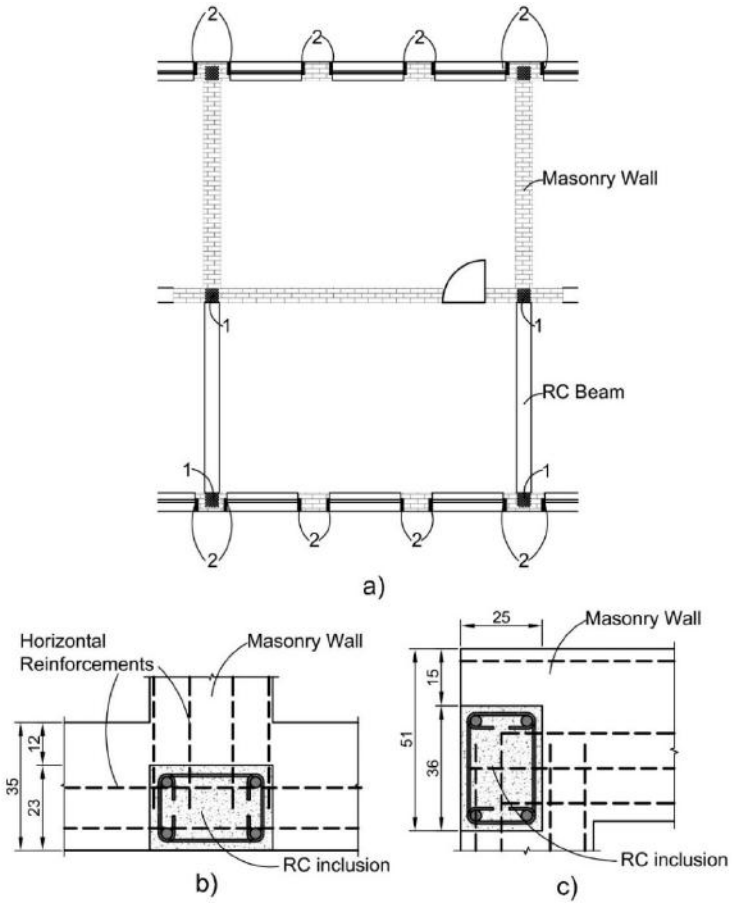

Figure 6-3. A partial floor plan showing vertical RC inclusions in masonry walls and reinforcement: 1- Level 1 inclusion and 2 – Level 2 inclusion.

Figure 6-4. A typical hollow core RC planks used for floor construction in the existing masonry buildings (Source: JV ALL Ingegneria – AIRES Ingegneria).

Floor system consists of precast reinforced concrete hollow core slabs. The slabs are in the form of 1.2 m wide hollow core RC planks with 22 cm thickness (see Figure 6-4). The planks are laid in the transverse direction of the building and are supported by longitudinal walls. Monolithic RC seismic belts were constructed in all walls at the floor level. The details of floor slab-to-wall connections are shown in *Figure 6-5*.

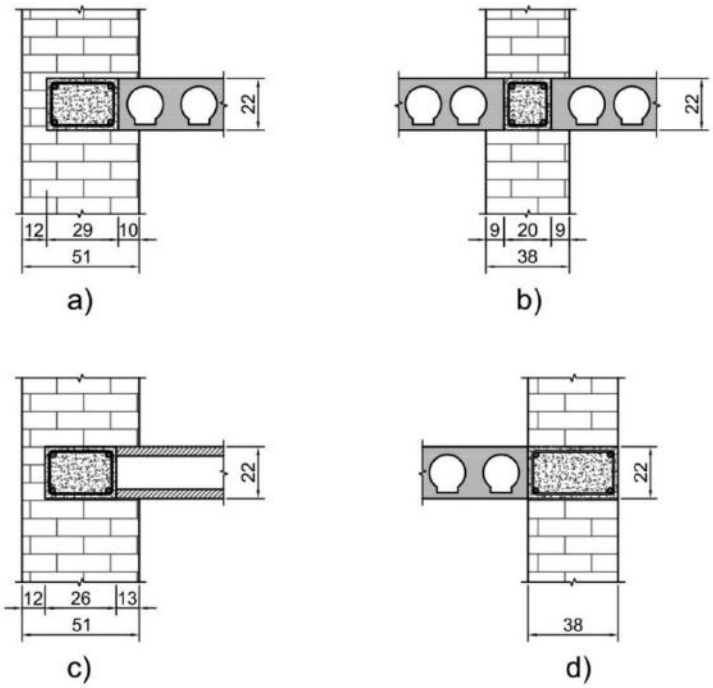

Figure 6-5. Details of wall-to-floor connections showing horizontal RC seismic belts.

The roof system consists of pitched roof with timber rafters supported by exterior walls and vertical timber posts supported by the RC slabs (Figure 6-6). The roofing is made of Corrugated Galvanized Iron (CGI) sheets. Approximate distance between the posts, which support the rafters, varies from 180 to 200 cm. The principal rafters have 140x50 mm cross-section and are provided at 80 to 100 cm spacing. The secondary rafters have 40x40 or 50x50 mm cross-sectional dimensions and are provided at 50 to 60 cm spacing. The roof system was not included in the original design, and it can be considered a non-engineered structure (it was not designed with engineering input). The sizes of timber elements and their connections were selected based on the experience of local artisans.

Figure 6-6. An interior view of the existing non-engineered roof structure (Source: JV ALL Ingegneria – AIRES Ingegneria).

6.2 Numerical Model of the Existing Building

6.2.1 Description of the model and key modelling assumptions

A 3-D Finite Element Method (FEM) numerical model of the existing structure was used for the analysis. The walls were modelled as 2-D shell elements and the floor structures were considered as rigid diaphragms. A 3-D view of the numerical model is shown in Figure 6-7a), while the model with a FEM mesh is shown in in Figure 6-7b). Note that X-direction is longitudinal, and Y-direction is transverse.

The following modelling assumptions were made in this case study:

1. **The floors are assumed to act as rigid diaphragms.** This assumption was adopted after performing a linear elastic analysis of a sample building block with two different diaphragm models: a) rigid diaphragm model, and b) a diaphragm model which simulated actual geometry and mechanical properties of the floor units (hollow core RC planks). The results showed comparable displacement magnitudes, which were very small. The rigid diaphragm assumption in this case is in line with Para 4.3.1 of Eurocode 8, Part 1 (EN 1998-1:2004), which states that the diaphragm can be considered as rigid when the relative diaphragm displacements don't exceed 10% of the absolute (total) seismic horizontal displacements at the floor level under consideration.
2. **The connections of intersecting masonry walls at intersections (at T- and L-junctions) are considered as rigid.** This assumption is justified by the fact that in the building under consideration there are vertical RC column-like inclusions at wall intersections and at the jambs of the openings (see Figure 6-3). Also, there are horizontal reinforcing bars at mortar joints which pass through the wall intersections and extend into the walls. It is believed that this provides sufficient rationale for considering rigid wall connections in this study.
3. **The walls have fixed supports at the base.** This assumption can be justified by the fact that masonry walls are rather thick (38 or 51 cm thickness) and are continuously supported by the foundations.

It is important to note that the above assumptions were deemed reasonable for the analysis of this structure, but they should not be used for seismic analyses of other structures without considering specific features of each structure.

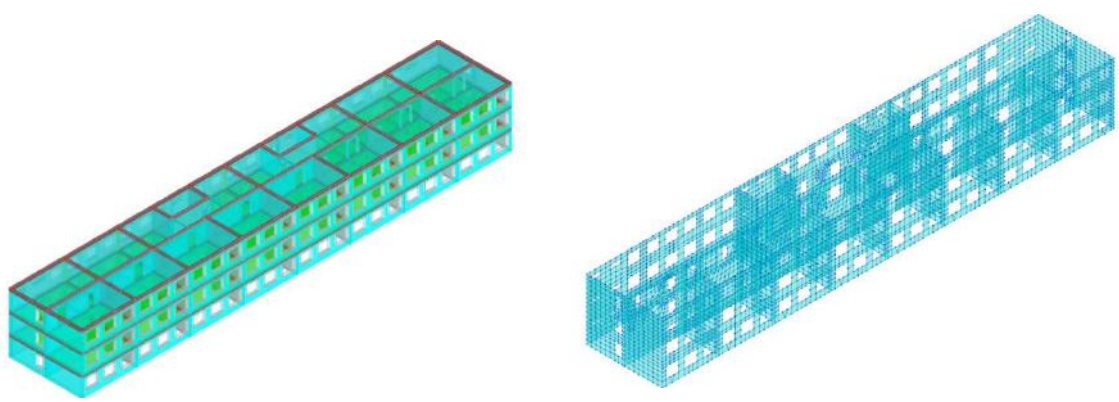

a) b)

Figure 6-7. Numerical model for Block A: a) a 3-D extruded view and b) FEM mesh.

6.2.2 Material properties

Material testing was performed before the analysis. Material properties for concrete and steel are presented in Table 6-1. Note that steel reinforcement has been provided in masonry walls (horizontal reinforcement and RC inclusions).

Material properties for masonry are presented in Table 6-2. The walls were constructed using solid clay bricks (250 mm x 120 mm x 65 mm dimensions) in cement mortar.

Table 6-1 Material properties for concrete and steel

CONCRETE	
R_b: average axial compression, daN/cm²	273
E: Normal elastic modulus, daN/cm²	307886,10
STEEL	
Class AI – horizontal masonry reinforcement	
R_s: Axial yield strength, daN/cm²	2250
E: Normal elastic modulus, daN/cm²	2060000,00
Class AII– reinforcement in inclusions	
R_s: Axial yield strength, daN/cm²	2800
E: Normal elastic modulus, daN/cm²	2060000,00
Class AIII (10-40 mm diameter bars) – reinforcement for frames	
R_s: Axial yield strength, daN/cm²	3650
E: Normal elastic modulus, daN/cm²	2060000,00

Table 6-2 Material properties for masonry

Elastic modulus – E, kg/cm^2	26000
Shear modulus – G, kg/cm^2	10400
Compression strength – R, kg/cm^2	13
Tensile strength – R_t, kg/cm^2	0.8
Flexural strength – R_{bt}, kg/cm^2	1.2
Section, R_{sq}, kg/cm^2	1.6
Crushing strength, R_c, kg/cm^2	13
Unit weight, kg/m^3	1800

6.2.3 Seismic weight

The masses included in the seismic weight are due to self-weight of structural elements, self-weight of interior and exterior walls, live load, and snow load (Table 6-3). The design seismic mass was obtained by multiplying the prescribed load by an appropriate reliability coefficient (γ_f) in accordance with СНиП 2.01.07-85*.

Table 6-3 Gravity Loads Considered for Seismic Weight

FIRST AND SECOND FLOOR LOADS	
Self-weight of structural elements	299 daN/m²
Sustained dead load	36 daN/m²
Total dead load - DL	**335 daN/m²**
Occupancy (live) load – office space and classrooms	200 daN/m²
Total live load - LL	**200 daN/m²**
THIRD FLOOR LOADS	
Self-weight of structural elements	299 daN/m²
Sustained dead load (including roofing)	88 daN/m²
Total dead load – DL	**387 daN/m²**
Snow load	70 daN/m²
Total snow load – LL	**70 daN/m²**

Seismic weight Q_k was calculated by taking into account permanent (dead) load, long-term load (live load due to occupancy), and short-term live load (due to snow) based on paragraphs 5.2.14, 5.2.15, and 5.2.16 of СНиП КР 20-02:2009.

6.3 Seismic Evaluation of the Existing Building

6.3.1 Seismic analysis parameters

Spectral Method was used for the seismic analysis according to paragraph 5.2.10 of СНиП КР 20-02:2009. Refer to Section 2.4.1 of this Manual for description of the method and seismic analysis parameters.

The following seismic hazard parameters were considered for the analysis:
1. Soil category I
2. Seismicity 9 bals (Table 5.1 of СНиП КР 20-02:2009)

The values of dynamic coefficient β for soil category I depend on the fundamental period T and can be determined from the following relationship (Table 5.7 of СНиП КР 20-02:2009):

For $T \leq 0.48$: $\beta = 2.5$
For $0.48 < T \leq 1.5$: $\beta = 1.2/T$
For $T > 1.5$: $\beta = 0.8$

In this case,
$\beta = 2.5$

The following coefficients were used for the seismic analysis (СНиП КР 20-02:2009), see Section 2.4.1:
K_1 = 1.2 importance factor for schools (Table 5.3)
K_2 = 0.30 coefficient of structural scheme – building with confined masonry walls (Type 4b, Table 5.4)

K_3 = 1.0 coefficient which depends on the building height (1.0≤ K_3 ≤1.8)
K_ψ = 1.0 the energy dissipation coefficient (Table.5.6)
A = 0.4 seismic hazard coefficient – 9 points (bals) (Table 5.5)

Maximum acceleration for the response spectrum is determined based on the following equations presented in Section 2.4.1:

$$S_{ik} = K_1 K_2 K_3 S_{0ik} ,$$
$$S_{0ik} = Q_k A \beta_i K_\psi \eta_{ik}$$

The product of coefficients for seismic force S_{ik} is equal to

$$K_1 K_2 K_3 K_\psi A\beta = 1.2 * 0.3 * 1.0 * 1.0 * 0.4 * 2.5 = 0.36$$

Torsional effects were considered according to paragraph 5.3.8 of СНиП КР 20-02:2009.

The following load combination was considered for the seismic analysis, according to Table 5.2 of СНиП КР 20-02:2009:

$$0.9\sum A + 0.8\sum B + 0.5\sum C + 1.0 * S$$

where *A* refers to permanent load (self-weight of the structure), *B* refers to occupancy (live) load, *C* refers to short-term loads (due to wind, snow etc.), and *S* refers to seismic load (see СНиП 2.01.07-85* for load descriptions). The above combination was used to determine the effective seismic weight.

6.3.2 Dynamic properties of the structure

Paragraph 5.2.6 of СНиП КР 20-02:2009 prescribes that the analysis needs to be performed taking into consideration spatial nature of earthquake action. In general, seismic analysis should be performed for two perpendicular horizontal directions of the building plan.

Vibration periods for the first 6 modes are shown in Table 6-4. It can be seen that the structure is relatively rigid (stiff), since the fundamental period for X-direction (longitudinal) is 0.157 sec and the period for Y-direction (transverse) is 0.196 sec. The review of mass participation factors has shown that more than 85 % modal mass in the Y-direction is associated with the first mode, and more than 84 % modal mass in the X-direction is associated with the third mode. It can be concluded that the structure is predominantly influenced by the first vibration mode for the each direction (X and Y). *Figure 6-8* shows mode shapes for translational modes in X- and Y- direction.

Table 6-4. Vibration periods for the existing structure

Mode	Period (s)	Mass Participation Ratio (X)	Mass Participation Ratio (Y)
1 (Y-direction)	0.196	0	0.854
2	0.166	0.042	0
3 (X-direction)	0.157	0.841	0
4	0.060	0	0.129
5	0.047	0.111	0
6	0.039	0	0.016

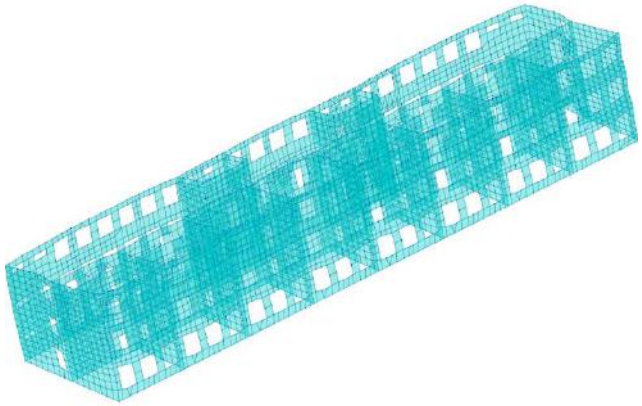

a)

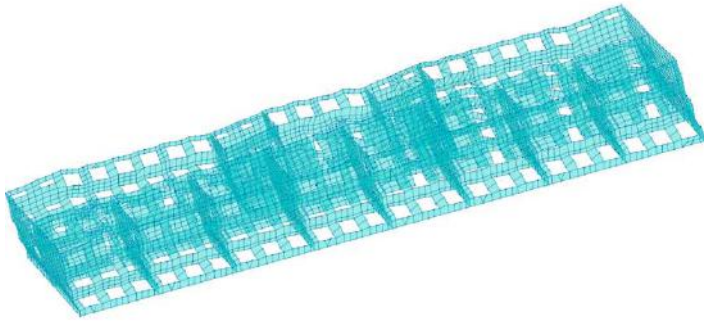

b)

Figure 6-8. Mode shapes – existing structure: a) first mode governs in Y-direction and b) third mode governs in X-direction.

6.3.3 Capacity evaluation of the existing building

The design calculations were performed according to SNIP KR 20-02:2009 and other local codes in terms of gravity and seismic loads, load combinations, materials and type of seismic analysis. Linear elastic seismic analysis, known as Spectral Method according to SNIP KR 20-02:2009, was used in this study.

The building model showed a three-dimensional (3-D) box-like behavior due to rigid floor and roof diaphragms, presence of horizontal seismic bands, and adequate wall-to-floor connections. A 3-D FEM numerical model was deemed appropriate for performing seismic evaluation of the in-plane seismic capacity of the walls. The evaluation of seismic forces for the existing structure was performed for two horizontal directions of seismic loading (X and Y).

Two types of failure mechanisms were considered for masonry walls subjected to the in-plane seismic effects: bending (flexural) and shear. The main output of the seismic analysis is Seismic Vulnerability Index, *I*, which indicates the extent of seismic deficiency as a ratio (percentage) of stresses induced by seismic loading and the allowable shear and/or bending stresses according to applicable codes. Figure 6-9 shows the building model - different colors show the extent of wall vulnerability with regard to bending failure. Green color shows walls which are considered to be safe (*I* value greater than 1.0), and other colors indicate deficient walls (where *I* value is less than 1.0). The results of the seismic evaluation indicate that the building is characterized by a medium to high seismic vulnerability, with the minimum *I* value equal to about 0.250. Figure 6-10 shows the building model where different

colors show the extent of wall vulnerability with regard to shear failure. The results indicate the minimum *I* value of 0.411 for shear failure.

The vulnerability index points out to the structural inadequacy, in particular in the longitudinal (X) direction, where walls have large openings. In transverse (Y) direction vulnerability is due to inadequate amount of cross walls, which are placed at large spacing (e.g. in the classrooms). Figure 6-11 shows critical vulnerable walls which were identified as a result of the seismic analyses (considering both bending and shear failure mechanisms).

It is also required to evaluate the out-of-plane seismic resistance of walls. The out-of-plane resistance checks consider individual walls and are based on the rigid-body kinematic theory (i.e. FEM analysis is not required). Seismic checks for the out-of-plane collapse kinematics motions involve the calculation of minimum horizontal action required to activate out-of-plane mechanism that determines the collapse of the element and compares it to the maximum seismic action (in the form of horizontal force) for the same wall. Out-of-plane wall failure is not a concern for this building due to adequate floor-to-wall and wall-to-wall connections.

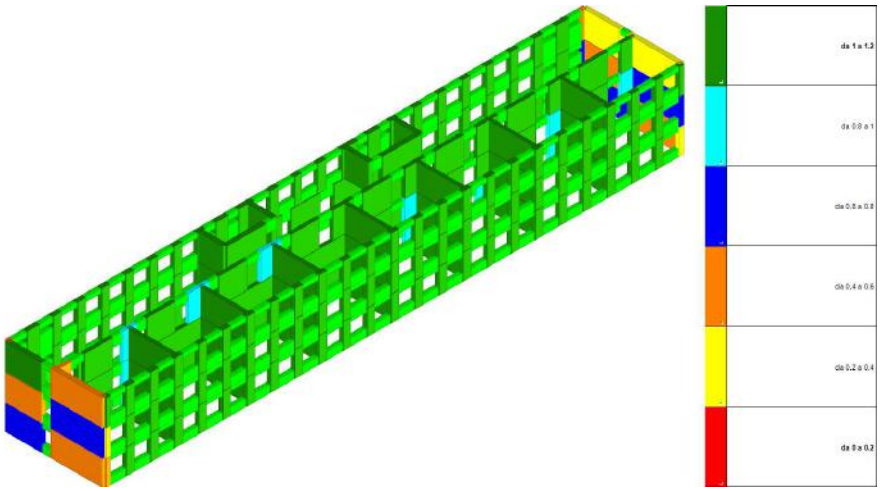

Figure 6-9. Seismic Vulnerability Index for the existing building: bending failure mechanism (minimum seismic vulnerability index I(pga) = 0.250).

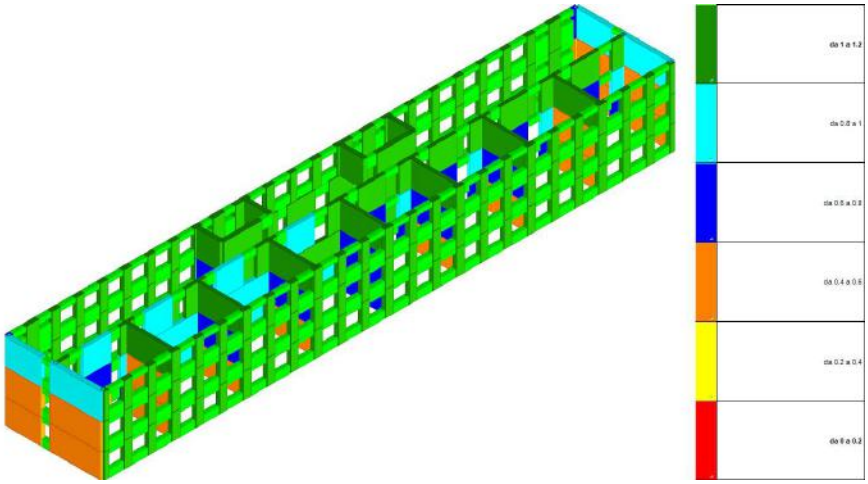

Figure 6-10. Seismic Vulnerability Index for the existing building: shear failure mechanisms (minimum seismic vulnerability index I(pga) = 0.411).

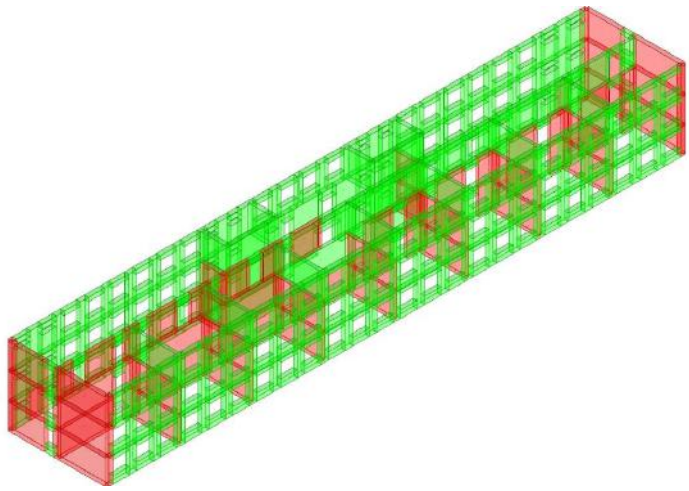

Figure 6-11. A numerical model of the building showing critical vulnerable walls (in red color) which were identified as a result of the seismic assessment.

The evaluation of seismic forces for the existing structure was performed in each horizontal direction of seismic loading (X and Y). The seismic base shear force was obtained as a sum of the support reactions at each wall support. The seismic base shear force for the structure is 982 t. The ratio of seismic base shear force and total effective seismic weight (ΣQ=2728 t), $S_{x/y}/\Sigma Q$, is 0.36.

6.3.4 Displacements

Interstory seismic displacements for each horizontal direction (X and Y) at each floor level were obtained from the analysis. These displacements were compared with the limits set by paragraph 5.4.3 of СНиП КР 20-02:2009.

The СНиП КР 20-02:2009 displacement limit between the roof and the ground floor can be calculated as follows

$$\Delta_k = h_k * K_2 * \varepsilon = 9600 * 0.3 * 0.01 = 29 \text{ mm}$$

where:
h_k = 9600 mm is the overall building height (based on the 3200 mm floor height);
K_2 = 0.30 a reduction coefficient that depends on the type of structural system (Table 5.4 of SNiP KR 20-02: 2009), and
ε = 0.01 there is no separate action of loadbearing and nonloadbearing structure due to seismic effects (masonry partition walls are isolated from the frame).

The results are summarized in Table 6-5. It can be concluded that interstory displacements for the existing building are within the limits prescribed by СНиП КР 20-02:2009.

Table 6-5. Maximum Seismic Displacements for the Existing Building: Spectral Method

Level	Displacements		СНиП КР 20-02:2009 Displacement Limits
	Δ_{kX} (mm)	Δ_{kY} (mm)	Δ_{max} (mm)
Roof	3.9	9.5	29.0

6.4 Seismic Retrofit Schemes

Two alternative schemes (RS4 and RS5) were considered in the study. Retrofit scheme RS4 is a common retrofit option and it consists of applying RC jacketing on selected masonry walls. Retrofit scheme RS5 is an innovative retrofit solution and consists of reinforcing masonry walls with Carbon Fiber Reinforced Polymer (CFRP) strips placed in horizontal and vertical directions. Both schemes (RS4 and RS5) involve retrofit applied on both wall surfaces (exterior and interior).

The third wall retrofit scheme was also considered. It consisted of applying polymer grid (geogrid) with lime mortar (or special mortar with additives) on the existing walls. This scheme was not considered in detail.

6.5 Retrofit Scheme 4 (RS4): RC Jacketing of Existing Masonry Walls

6.5.1 An overview of the retrofit scheme

RC jacketing is an effective seismic retrofitting technique which uses easily available materials and results in the lower construction costs. The required level of construction skills is not very high, however the level of disturbance to the occupants is high. This construction solution can be implemented in a phased manner in order to minimize the need for relocation of the school occupants during the construction.

The proposed scheme consists of application of double-sided RC jackets attached to masonry walls (exterior and interior wall surface), as shown in Figure 6-12. Retrofit of the existing wall foundations is also required. The concrete is applied in two layers with steel reinforcing mesh in between. The meshes on both exterior and interior wall surfaces are connected by means of steel anchors (dowels).

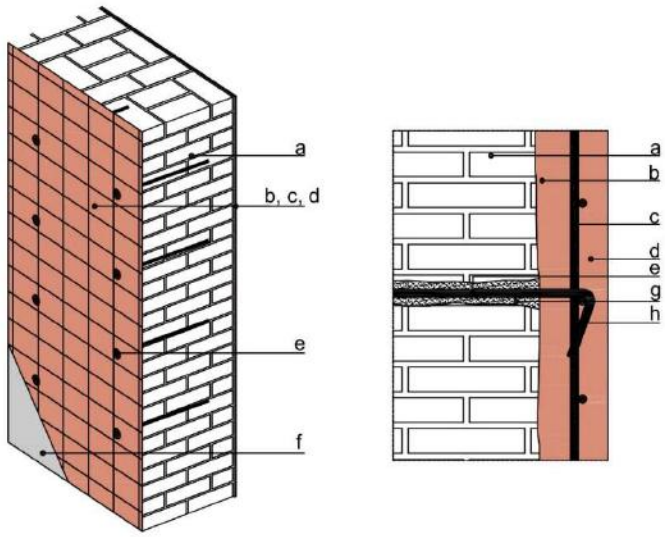

Figure 6-12. RC jacketing of an existing masonry wall: a) existing masonry; b) first layer of concrete; c) steel wire mesh; d) second layer of concrete; e) steel anchors; g) a hole in the masonry wall filled with epoxy resin or cementitious grout, and h) steel anchor with a 90-degree hook.

For cost optimization purposes, RC jacketing was proposed in four variants, J1 to J4 (Table 6-6). It can be seen from Figure 6-13 that a larger amount of steel mesh reinforcement (e.g. variant J1) is used for Level 1 of the building with the highest seismic demand, and the smallest amount (variant J4) is used for Level 3 due to the smaller seismic demand at the upper floors. RC jacketing was provided continuously along the wall height (from the foundation to the roof level).

For increasing the resistance of the existing loadbearing walls, some of the openings in the existing walls which are no longer used were closed (filled with new masonry).

Table 6-6. RC Jacketing Variants

Variant	RC jacket thickness	Steel Wire Mesh	Additional reinforcement	Wall anchors
J1	8 cm	12 mm ϕ @ 200x200 mm	12 mm ϕ horizontal bars @ 100 mm spacing	12 mm ϕ 4 per sqm.
J2	8 cm	10 mm ϕ @ 200x200 mm	10 mm ϕ horizontal bars @ 100 mm spacing	12 mm ϕ 4 per sqm.
J3	8 cm	10 mm ϕ @ 200x200 mm	none	12 mm ϕ 4 per sqm.
J4	8 cm	8 mm ϕ @ 200x200 mm	none	12 mm ϕ 4 per sqm.

6.5.2 Numerical model

Numerical model of the retrofitted building is shown in Figure 6-14. It can be seen that walls with RC jacketing were modelled as 2-D shell finite elements with concrete material properties. Material properties for the existing masonry walls are presented in Table 6-7. Material properties for concrete used for RC jacketing are presented in Table 6-8, while the properties of steel reinforcement for RC jacketing are presented in Table 6-9.

Table 6-7 Masonry material properties

No.	Property	Unit	Value
1	Modulus of elasticity	t/m^2	58,000
2	Poisson's ratio		0.25
3	Mass density (increased by 1.1)	t/m^3	1.98

Table 6-8 Concrete material properties: RC jacketing
Concrete: Grade B30

No.	Property	Unit	Value
1	Modulus of elasticity	t/m^2	260,000
2	Poisson's ratio		0.235
3	Mass density (increased by 1.1)	t/m^3	2.16

Table 6-9. Steel Properties: RC Jacketing
Steel: Horizontal and vertical reinforcement Grade A-III

No.	Property	Unit	Value
1	Modulus of elasticity	t/m^2	$2.0x10^7$
2	Design tensile strength	t/m^2	37500

Figure 6-13. Floor plans of the retrofitted building (RS4) (note that red-shaded areas indicate locations where the existing openings were filled with masonry).

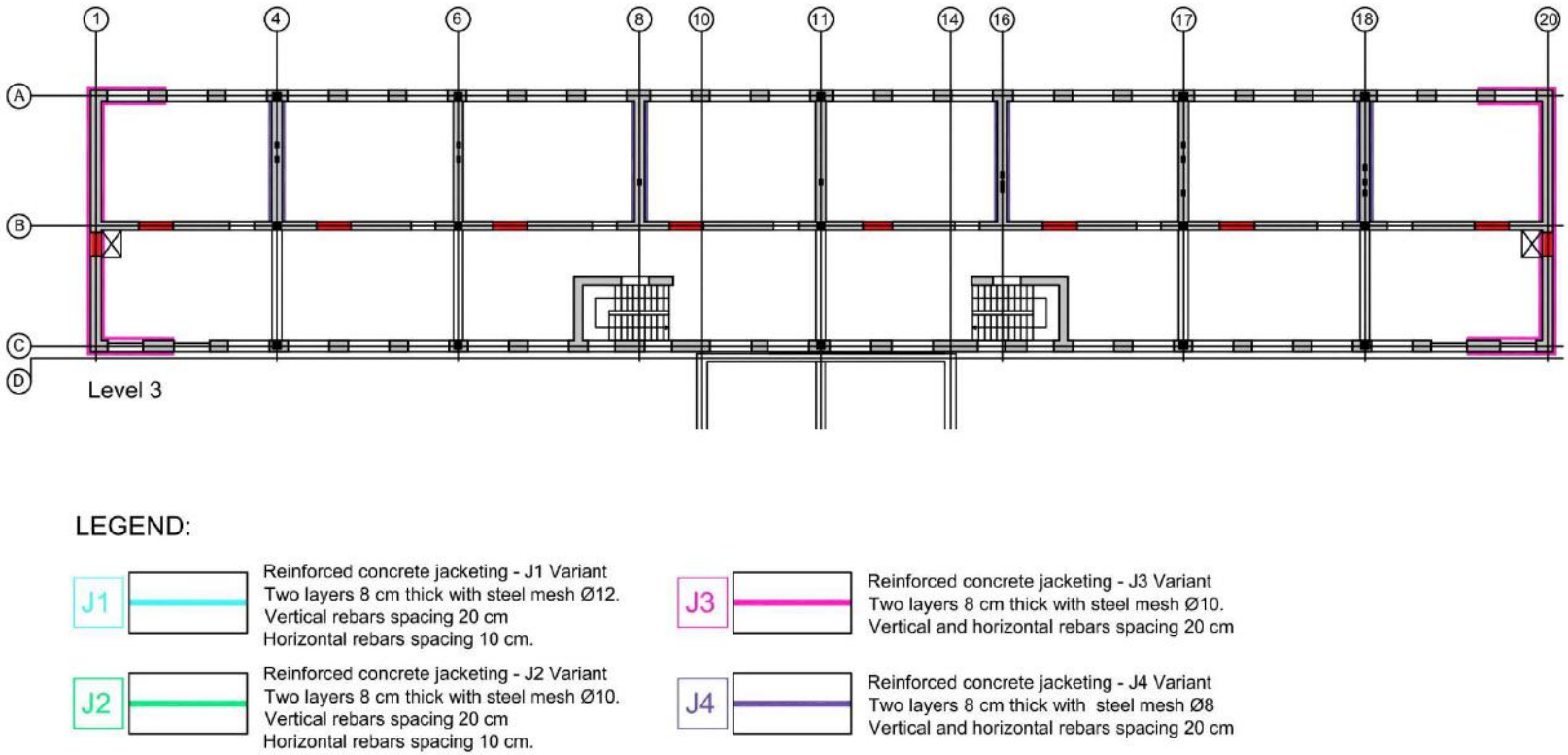

Figure 6-13 (continued)

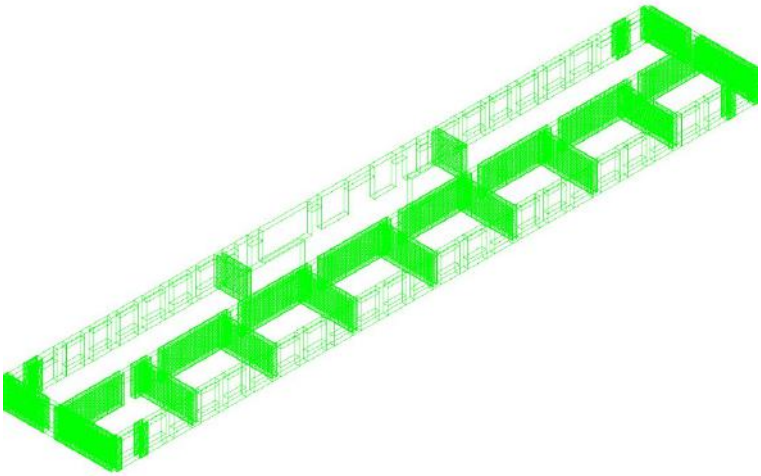

Level 1

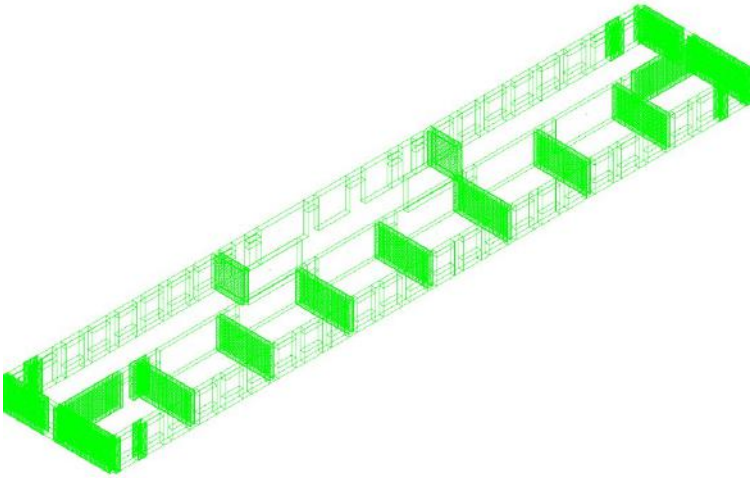

Level 2

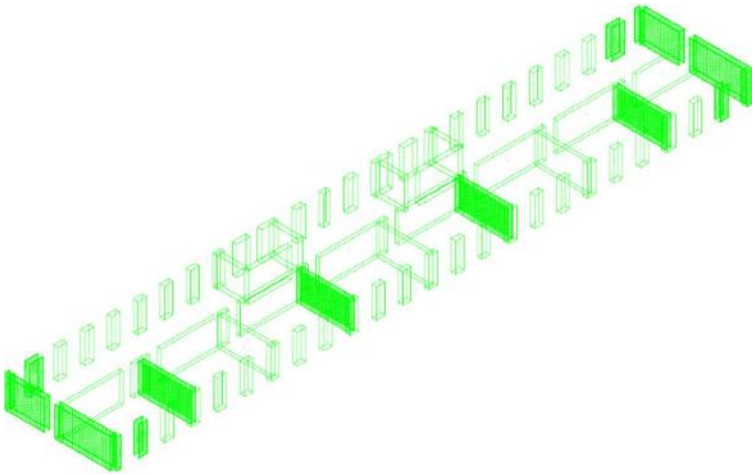

Level 3

Figure 6-14. Numerical model of the retrofitted building showing walls with RC jacketing.

6.5.3 Linear elastic analysis (Spectral Method)

6.5.3.1 Dynamic properties

Vibration periods for the first 6 modes are shown in Table 6-10. It can be seen that the structure is very rigid, since the fundamental period for X-direction is 0.145 sec (as opposed to 0.157 sec for the existing structure) and the period for Y-direction is 0.178 sec (as opposed to 0.196 sec for the existing structure).

The review of mass participation factors shows that more than 84 % of the total modal mass in the Y-direction is associated with the first vibration mode, and more than 83 % of the total modal mass in the X-direction is associated with the third vibration mode. It can be concluded that the structure is predominantly influenced by the first vibration mode for each direction (X and Y). Figure 6-15 shows mode shapes for translational modes in X- and Y-direction.

Table 6-10. Vibration periods for the retrofitted structure

Mode	Period (s)	Mass Participation Ratio (X)	Mass Participation Ratio (Y)
1 (Y-direction)	**0.178**	0.001	**0.841**
2	0.154	0.035	0.0
3 (X-direction)	**0.145**	**0.837**	0.001
4	0.055	0.0	0.137
5	0.042	0.122	0.0
6	0.036	0.0	0.020

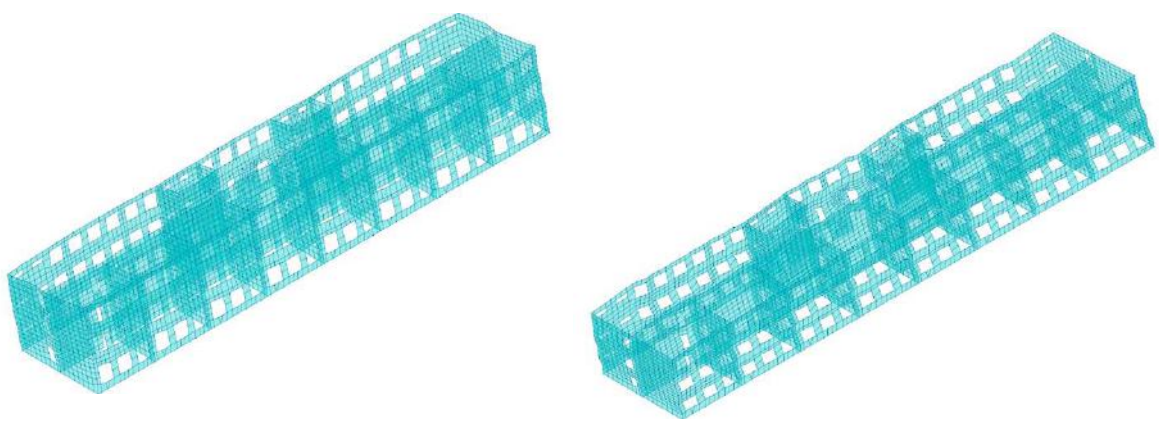

a) *b)*

Figure 6-15. Mode shapes for the retrofitted structure: a) first mode governing for Y-direction and b) third mode governing for X-direction.

6.5.3.2 Capacity evaluation of the retrofitted building

Capacity evaluation of the retrofitted building was performed in the same manner as for the existing building. The evaluation of seismic forces was performed in both horizontal directions (X and Y). Seismic Vulnerability Index *I* for both shear and flexural (bending) mechanisms *I(pga) > 1*, which indicates a satisfactory seismic retrofit solution (see *Figure 6-16*).

The seismic base shear force for the retrofitted structure is 1045 t. The ratio of seismic base shear force and total effective seismic weight (ΣQ=2903 t), $S_{x/y}/\Sigma Q$, is 0.36.

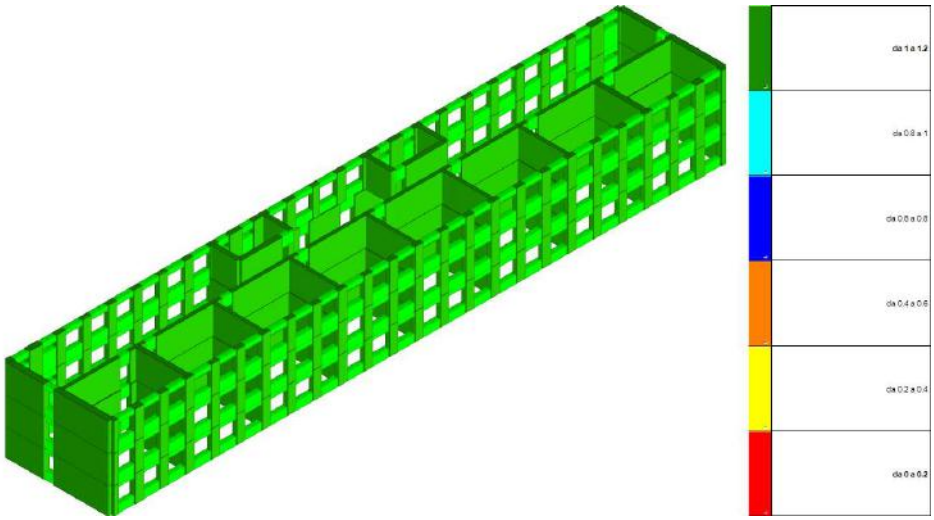

Figure 6-16. Seismic Vulnerability Index for the retrofitted building: green color indicates satisfactory values (I(pga) > 1).

6.5.3.3 Displacements

Interstory seismic displacements for each horizontal direction (X and Y) at each floor level were obtained from the analysis. These displacements were compared to the limits set by paragraph 5.4.3 of СНиП КР 20-02:2009. The results are summarized in *Table 6-11*.

It can be seen that the retrofit caused a decrease in displacements in both directions. The displacements are within the СНиП КР 20-02:2009 limits.

Table 6-11. Maximum Seismic Displacements for the Retrofitted Building: Spectral Method

	Level	Displacements		СНиП КР 20-02:2009 Displacement Limits
		Δ_{kX} (mm)	Δ_{kY} (mm)	Δ_{max} (mm)
Existing	Roof	3.9	9.5	29.0
Retrofitted (RS4)	Roof	3.2	7.8	29.0

6.5.4 Design of retrofitted walls with RC jacketing

Design of RC jacketing for masonry walls can be performed assuming that jacketing acts in unison with the existing masonry wall.

The design approach for RC jacketing is illustrated in *Figure 6-17*. Horizontal section of a masonry wall with thickness t_Z and length L is shown in *Figure 6-17*a). The wall has two RC jackets – exterior and interior (jacket thickness is t_B). The distribution of horizontal seismic forces between the masonry wall and RC jackets is proportional to their relative stiffnesses. For example, if the seismic shear force in the wall with RC jackets is denoted as Q, the shear force in the jacket, Q_B, can be determined as follows

$$Q_B = \frac{K_B}{2K_B + K_Z} * Q$$

where K_B and K_z denote lateral stiffness for the jacket and the masonry wall, respectively. The shear force in the masonry wall, Q_Z, is equal to

$$Q_Z = Q - 2Q_B$$

Note that the stiffness of the jacket is influenced by the jacket thickness and concrete properties (modulus of elasticity and shear modulus).

A RC jacket for a wall with length *L* and height *h* needs to resist the seismic shear force Q_B, plus axial forces and bending moments (N_B and M_B), as shown in *Figure 6-17*b). An RC jacket is designed like a RC shear wall according to SP 63.13330.2012. The required size and spacing of steel mesh in the jacket are determined based on the design seismic forces.

Through-wall steel anchors are to be designed to resist internal shear forces in the jackets. The design shear force per anchor F_a can be calculated based on the shear force in the jacket and the assumed horizontal/vertical anchor spacing (s_h and s_v), that is (see *Figure 6-17*c),

$$F_a = \frac{Q_B}{h * L}(s_h * s_v)$$

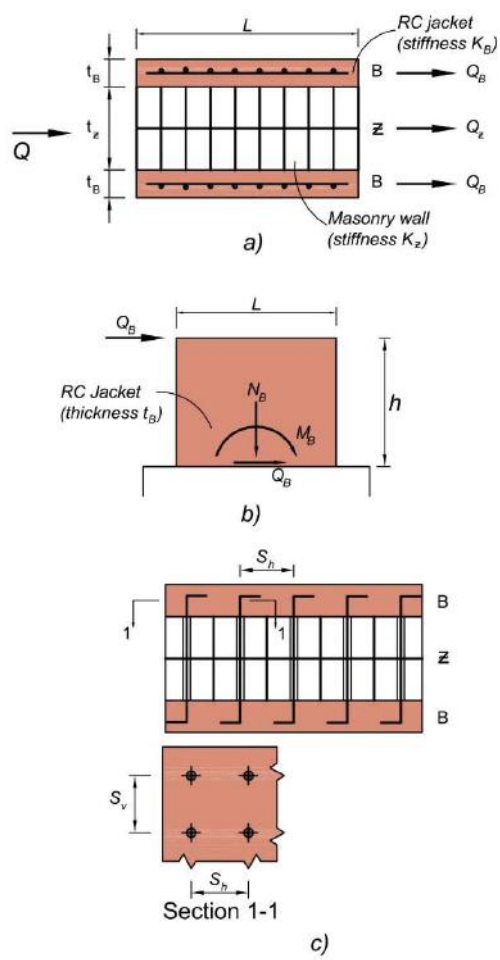

Figure 6-17. Design approach for RC jacketing of masonry walls: a) horizontal cross-section showing seismic force distribution in a masonry wall with RC jacket; b) vertical elevation showing design forces in a RC jacket, and c) horizontal cross-section showing wall anchors.

Design requirements for RC jackets are addressed by Clause 10.3.2 and Table 10.1 of SP 63.13330.2012. Thickness of a RC jacket should not be less than 40 mm and 50 mm for interior and exterior walls respectively. Therefore, the design thickness of RC jacket used for this study (80 mm) meets the minimum thickness requirements of SP 63.13330.2012.

RC jacketing retrofit scheme may require strengthening of the existing wall foundations - if the capacity of the existing foundations is not adequate to resist increased shear forces, axial forces and bending moments due to jacketing. Strengthening can be achieved in different ways, e.g. by constructing the new RC elements on each side of the existing strip footing (see Figure 6-21). The required size of new RC foundation elements and reinforcement is determined based on the design provisions contained in clauses 8.1.53 and 10.4 of СП 63.13330.2012.

6.5.5 Typical construction details: RS4

Typical construction details related to RC jacketing of masonry walls and strengthening of the existing wall foundations are presented in this section.

6.5.5.1 RC jacketing

This section illustrates application of RC jacketing for masonry walls (Figure 6-18), and special details of jacketing at wall intersections (Figures 6-19 and 6-20).

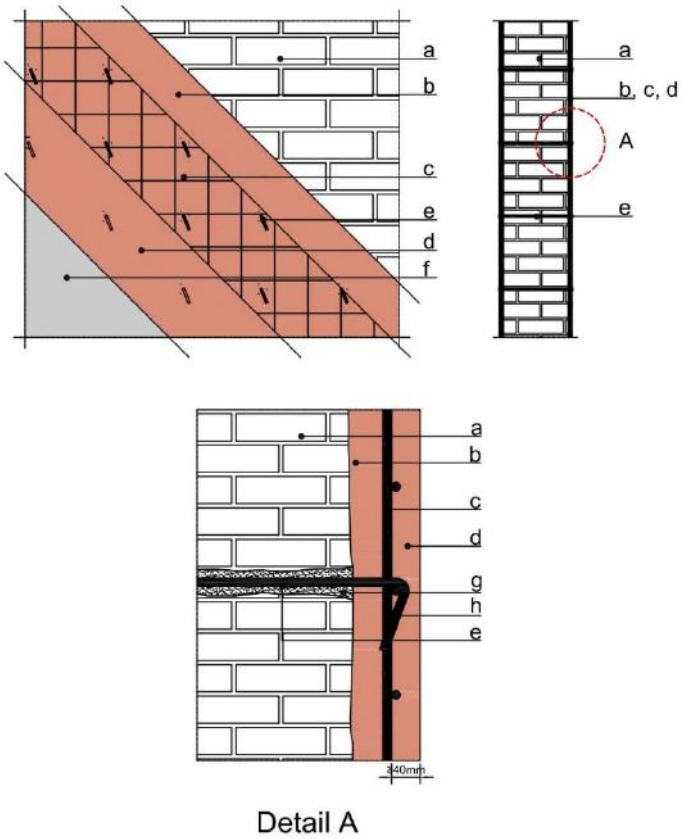

Figure 6-18. RC jacketing details: a) existing masonry wall; b) first layer of concrete jacketing; c) welded steel wire mesh; d) second layer of concrete jacketing; e) steel anchors; f) plaster; g) a hole in the masonry wall filled with epoxy resin or cement mortar grout, and h) steel anchor with a 90° degree hook.

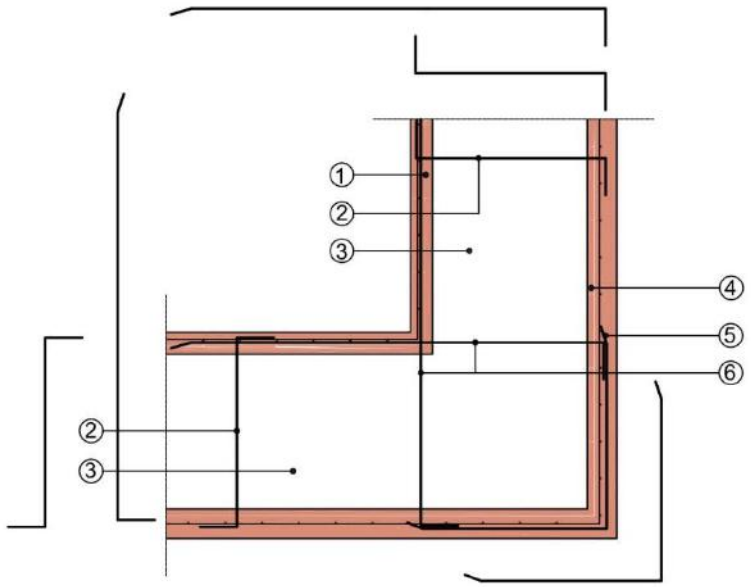

Figure 6-19. RC jacketing of masonry walls at L-junctions: 1) Ø10 200x200 mm wire mesh and 80 mm thick internal RC jacketing; 2) 4Ø12 through-wall steel bar (Ø16 hole filled with cement mortar); 3) existing masonry wall; 4) Ø10 200x200 mm wire mesh and 80 mm thick external RC jacketing; 5) Ø12 steel bars at the corner at 500 mm spacing horizontally and vertically, and 6) Ø12 steel bars at 500 mm spacing.

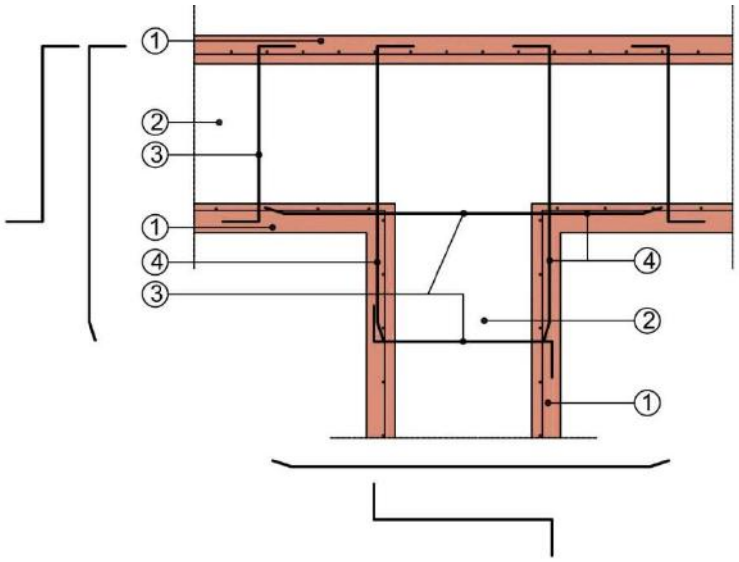

Figure 6-20. RC jacketing of masonry walls at T-junctions: 1) RC jacketing; 2) existing masonry wall; 3) Ø12 through-wall steel bars at the junction at 500 mm spacing horizontally and vertically, and 4) Ø12 through-wall steel bar at 500 mm spacing.

6.5.5.2 Strengthening of the existing wall foundations

Construction details showing strengthening of the existing wall foundations are presented in Figure 6-21. Note that the existing ground floor may need to be replaced or renovated in some cases, but the details are omitted in this case study.

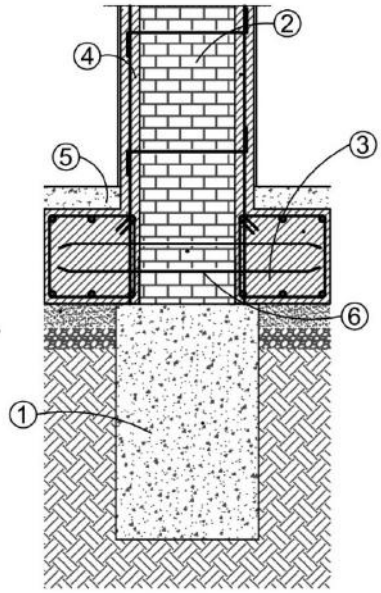

a)

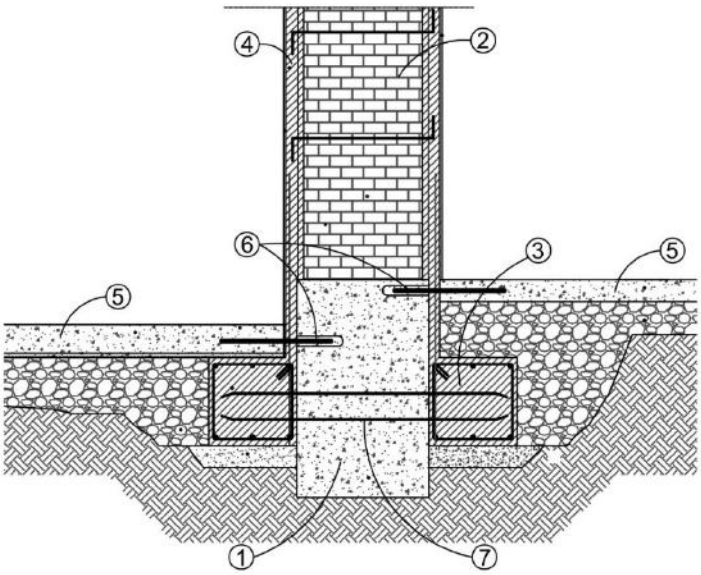

b)

Figure 6-21. Strengthening of the foundations: a) interior wall and b) exterior wall.

6.5.6 Construction procedure: RS4

6.5.6.1 RC jacketing

The construction procedure for RC jacketing of masonry walls is summarized below (see Figure 6-18):

1. Remove the existing plaster. Clean the wall surface with wire brushes and spray with water at low pressure (detail "f" on the figure).
2. Drill holes through the masonry walls using electric drill. Usually 4 or 5 holes need to be provided per square meter. The hole size needs to be larger than bar size (e.g. use 16

mm holes for 12 mm bars). Fill the holes with non-shrink cement grout (detail "g" on the figure).

3. Insert steel anchors (dowels) in the previously injected holes to achieve connection between the exterior and interior steel mesh (detail “e” on the figure).
4. Place the first layer of concrete (approximately 40 mm thick), either manually or with a spraying machine. The concrete needs to create support for the welded wire mesh (detail "b" on the figure).
5. Place the welded wire mesh on top of the first layer of concrete while it is still fresh (see detail "c" on the figure). After the mesh is placed, bend steel anchors to create 90 degree hooks (detail "h" on the figure).
6. Apply the second layer of concrete jacket – minimum 40 mm thick (see detail "d" on the figure).
7. Apply cement-based plaster to restore the original wall appearance (detail "f" on the figure).

To achieve higher durability of RC jacketing it is generally recommended to specify steel wire mesh with zinc-coated protection. However, it is acknowledged that zinc-coated protection may not be available, and so regular steel mesh may be used for general applications. It is critical to ensure min 40 mm concrete cover for RC jacketing.

RC jacketing is also applied at wall intersections (L- and T-junctions). The construction procedure is same as for jacketing of masonry walls, except that the spacing of steel anchors is fixed (500 mm horizontally and vertically).

6.5.6.2 Strengthening of the existing foundations

All wall footings are enlarged by providing new RC elements of 40 x 40 cm cross-section on each side of the existing wall footing.

Construction procedure is summarized below – illustrated on an example of interior wall (see Figure 6-21):

1. Excavate soil below the plinth level on each side of the existing wall (approximately 60 cm depth).
2. Construct a 10 cm thick lean concrete layer on each side of the wall.
3. Place a 10 cm thick gravel filling.
4. Place a PVC sheet atop the gravel layer.
5. Construct new RC foundation elements – one on each side of the wall (exterior and interior). For this project these elements have 40 x 40 cm cross-sectional dimension and are reinforced with 6-16 mm diameter longitudinal steel bars and 8 mm diameter stirrups at 200 mm horizontal spacing.
6. RC jacketing from the wall should extend downwards to the bottom of the new foundation elements.
7. Provide horizontal steel bars to connect the existing and new RC foundation elements. For this project, provide 18 mm diameter bars with 1100 mm length and 1000 mm spacing.

6.5.7 Construction cost estimates: RS4

Retrofit scheme RS4 consists of the wall jacketing and strengthening of the existing foundations. The corresponding construction costs are included in the following table.

Table 6-12. Construction cost estimates: RS4 (jacketing of masonry walls)

#	Item	Unit	Quantity	Unit price (KGS)	Total price (KGS)	Remarks
Material cost						
	Option J1: **cost per m²**					
1	Procurement of reinforcing steel bars AIII, 12 mm diameter (for additional horizontal reinforcement and wall anchors)	kg	10.58	48	507.84	
2	Procurement of reinforcing bars AI with 10 mm diameter (for the mesh)	kg	6.17	49	302.33	
3	Procurement of concrete grade B30 with 80 mm thick layer	m^3	0.08	3255	260.40	
4	Procurement of repair mortar based on epoxy resins and mineral aggregates	Liter	0.5	1120	560.00	
5	Total material cost per m^2	KGS			1630.57	
	Option J2: **cost per m²**					
6	Procurement of reinforcing steel bars AIII, 10 mm diameter (for additional horizontal reinforcement)	kg	12.34	49	604.66	
7	Procurement of reinforcing bars AI with 12 mm diameter (for wall anchors)	kg	1.78	48	85.25	

8	Procurement of concrete grade B30 with 80 mm thick layer	m^3	0.08	3255	260.40	
9	Procurement of repair mortar based on epoxy resins and mineral aggregates	Liter	0.5	1120	560.00	
10	Total material cost per m^2	KGS			1510.31	
	Option J3: **cost per m^2**					
11	Procurement of reinforcing steel bars AIII, 10 mm diameter (for the mesh)	kg	6.17	49	302.33	
12	Procurement of reinforcing bars AI with 12 mm diameter (for wall anchors)	kg	1.78	48	85.25	
13	Procurement of concrete grade B30 with 80 mm thick layer	m^3	0.08	3255	260.40	
14	Procurement of repair mortar based on epoxy resins and mineral aggregates	Liter	0.5	1120	560.00	
15	Total material cost per m^2	KGS			1207.98	
	Option J4: **cost per m^2**					
16	Procurement of reinforcing steel bars AIII, 8 mm diameter (for the mesh)	kg	3.95	48	189.60	
17	Procurement of reinforcing bars AI with 12 mm diameter (for wall anchors)	kg	1.776	48	85.25	

18	Procurement of concrete grade B30 with 80 mm thick layer	m^3	0.08	3255	260.40	
19	Procurement of a repair mortar based on epoxy resins and mineral aggregates	Liter	0.5	1120	560.00	
20	Total material cost per m^2	KGS			1095.25	
Construction cost						
	Options J1 and J2: cost per m^2					
21	Removal of existing plaster + cleaning + dusting	m^2	1	170	170	
22	Drilling holes + mounting steel anchors using an epoxy-based mortar + mounting additional fittings	m^2	1	180	180	
23	Placing of concrete by applying shotcrete	m^2	1	2700	2700	
24	Total construction cost per m^2 (options J1 and J2)	KGS			3050	
	Options J3 and J4: cost per m^2					
25	Removal of existing plaster + cleaning + dusting	m^2	1	170	170	
26	Drilling holes + mounting steel anchors using an epoxy-based mortar	m^2	1	120	120	
27	Placing of concrete by applying shotcrete	m^2	1	2700	2700	

28	Total construction cost per m^2 (options J3 and J4)	KGS			2990	
Option			J1	J2	J3	J4
29	Construction cost per m^2	KGS	4680.57	4560.31	4197.98	4085.25
	Strengthening of the foundations					
30	Material cost	KGS				143449.97
31	Construction cost	KGS				55897.38
32	Total foundation cost	KGS				199347.35
Total cost						
Level 1			J1	J2	J3	J4
33	Construction quantity	m^2	-	85.25	247.09	-
34	Total cost (each option)	KGS	-	388757.14	1037261.59	-
35	Foundation strengthening*	KGS				199347.35
36	Total cost for Level 1 (all options)	KGS				1625366.07
Level 2			J1	J2	J3	J4
37	Construction quantity	m^2	-	85.25	-	125.74
38	Total cost (each option)		-	388757.14	-	513682.35
39	Total cost for Level 2 (all options)					902439.49

Level 3			J1	J2	J3	J4
40	Construction quantity	m^2	-	-	85.25	51.15
41	Total cost (each option)		-	-	357869.23	208955.53
42	Total cost for Level 3 (all options)					566824.76
Total cost (Level 1 + Level 2 + Level 3)		**Total built-up area(m^2)**	**Total cost (for entire building)**		**Total cost (per m^2)**	
43	Total cost (KGS)	949.0	3094630		3261	
44	Total cost (USD)	949.0	44849.7		47.3	

Notes:
1. * The construction cost estimate calculations for the foundation strengthening have not been included in the table. The cost was calculated following the procedure outlined in Section 6.5.6.2. The total length of foundations was taken equal to 73.3 m.
2. Assumed exchange rate: 1 USD= 69 KGS

6.6 Retrofit Scheme 5 (RS5): Carbon Fiber Reinforced Polymers (CFRP)

For retrofit scheme RS5 consists of Carbon Fibre Reinforced Polymer (CFRP) strips as reinforcement for masonry walls. The proposed technique consists of applying CFRP strips in vertical and horizontal directions, on both sides of the walls. The strips are bonded to the walls by means of epoxy-based resin. The exterior and interior CFRP layers are inter-connected by CFRP anchors. Retrofit scheme RS5 is presented in Figure 6-22.

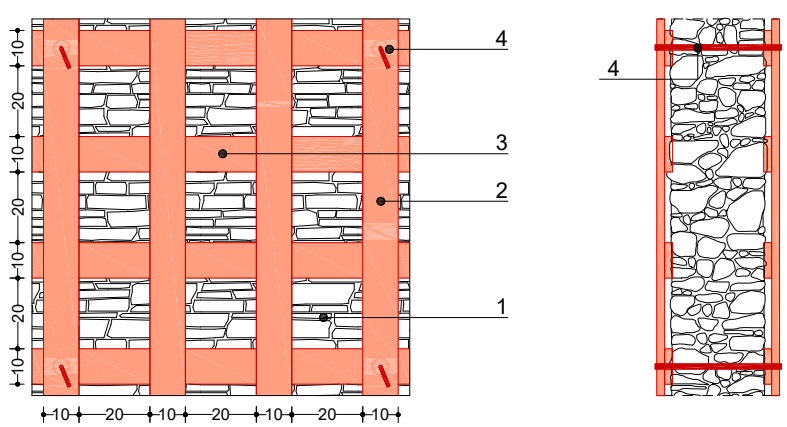

Figure 6-22. Retrofitting of masonry walls with CFRP strips (RS5): 1) existing masonry wall; 2) vertical CFRP strips; 3) horizontal CFRP strips, and 4) CFRP through-wall anchors.

Seismic design of a wall retrofitted by the CFRP strips is conceptually similar to RC jacketing, that is, a grid formed by horizontal and vertical CFRP strips has a similar effect like

RC jacketing. This retrofit scheme results in enhanced capacity and stiffness of the retrofitted wall.

The required width and thickness of CFRP strips, and the spacing between the strips depend on the magnitude of internal forces (shear force, axial load and bending) and is determined by design. As of June 2018, the design of CFRP strips is not addressed by codes in the KR.

For cost optimization purposes, the CFRP application is proposed in the following two variants (Table 6-13). Note that Variant #1 results in higher capacity and stiffness and is used at lower floor levels (e.g. Level 1), where the seismic demand is largest, while Variant #2 is used at upper floors where seismic demand is less.

Table 6-13. RS5 CFRP Strips: Key Properties and Variants

Variant	Width of vertical/horizontal strips	Center-to-center spacing (vertical/horizontal)	CFRP Anchors
# 1	10 cm	20 cm	4 per sqm.
# 2	10 cm	30 cm	4 per sqm.

The following CFRP material proprieties were considered in this study:

- Weight per unit area: 760 g/m²;
- Equivalent thickness of dry fabric: 0.106 mm;
- Tensile strength: 4.800 MPa;
- Tensile modulus of elasticity: 230 GPa;
- Elongation strain at failure: 2.1%.

6.7 A Comparison of the Seismic Retrofit Schemes

The following seismic retrofitting schemes have been compared: 1) RC jacketing (RS4); ii) carbon fiber reinforcement polymer (CFRP) strips (RS5) and iii) polymeric grid (geogrid) with lime mortar (or special mortar with additives) (RS6).

The final ranking is presented in *Table 6-14*. The final score for each retrofit scheme was obtained as the sum of scores for each requirement. The score for each requirement ranges from 1 to 3, where 1 (Low) represents the lowest and 3 (High) the highest value (best choice), based on a relative scale. Please note that 1 usually indicates the least favorable option, but in some cases (e.g. Extent of Disturbance) it indicates the most favorable option.

Since retrofit scheme RS5 is new in the KR and has not been implemented yet on a large scale it is expected to have the higher cost. Also, the construction is not traditional for the local workmen and could affect the final result of the retrofitting works.

The RC jacketing technique is the first-ranked retrofit scheme due to the availability of construction materials (this leads to lower construction costs) and high seismic performance. The level of required constructions skills is not very high, but the level of disturbance to the occupants is high.

Table 6-14. A comparison of the seismic retrofit schemes

Requirement	Retrofit Schemes		
	RC jacketing (RS4)	CFRP strips (RS5)	Geogrid (RS6)
Availability of materials locally	High	Low	Medium
Required level of construction skills	Low	High	Low
Construction costs	Low	High	Medium
Seismic performance	High	High	Medium
Extent of disturbance during the construction	High	Low	High
Final ranking	1st	3rd	2nd

6.8 References

JV “ALL Ingegneria and AIRES Ingegneria” (2017). Preparation of Feasibility Studies and Designs for Improved Energy Efficiency and Seismic Safety of Pilot Schools and Kindergartens in Balykchy and Toktogul, School No. 5 “Aitmatova”– Balykchy- Detail Design – Technical Report – Section 1: General Part (in English).

JV “ALL Ingegneria and AIRES Ingegneria” (2017a). Preparation of Feasibility Studies and Designs for Improved Energy Efficiency and Seismic Safety of Pilot Schools and Kindergartens in Balykchy and Toktogul, School No. 5 “Aitmatova” – Balykchy - Detail Design – Section 2: Structural Retrofit Part (in English).

ЦНИИСК им. Кучеренко (1984). Рекомендации по усилению каменных конструкций зданий и сооружений (Recommendations for Strengthening of Masonry Structures and Buildings), М.: Стройиздат, 3'б с (in Russian).

Харьковский Промстройниипроект, НИИЖБ. (1992). Рекомендации по проектированию усиления железобетонных конструкций зданий и сооружений реконструируемых предприятий. Надземные конструкции и сооружения (Recommendations for Design of Reinforcement of RC Structures under Reconstruction. Aboveground Structures), Стройиздат, Москва, 191с (in Russian).

Промпроект (2017). Повышение сейсмической безопасности, энергоэффективности и капитальный ремонт пилотной школы №5 им. Ч. Айтматова г.Балыкчы. Проект городского развития «Улучшение сейсмической безопасности и энергоэффективности социальных инфраструктур в городах участниках». Стадия рабочий проект. Конструкции железобетонные 1722-1-КЖ. Проект адаптирован ОАО «Промпроект». (Improving Seismic Safety, Energy Efficiency and Capital Repairs of Pilot Aitmatov School No. 5 in Balykchy. Urban Development Project, Working Draft Stage, Reinforced Concrete Structures 1722-1-KZh, Adapted by Promproekt OJSC), Бишкек (in Russian).

EN 1998-1:2004 (2004). Eurocode 8: Design of Structures for Earthquake Resistance – Part 1: General Rules, Seismic Actions and rules for buildings, European Committee for Standardization, Brussels, Belgium.

EN 1998-3:2005 (2005). Eurocode 8: Design of structures for earthquake resistance – Part 3: Assessment and retrofitting of buildings and bridges. European Committee for Standardization, Brussels, Belgium.

СП 63.13330.2012. Бетонные и железобетонные конструкции (Concrete and Reinforced Concrete Structures – Basic Requirements) (in Russian).

СНиП 2.01.07-85*. Нагрузки и воздействия (Loads and Effects). State Building Committee of USSR (Gosstroi of USSR), Moscow, USSR (in Russian and English)

СНиП 22-01-98 КР Оценка сейсмостойкости зданий существующей застройки (Assessment of seismic safety of buildings). Минархстрой Кыргызской Республики, Bishkek, Kyrgyz Republic (in Russian).

СНиП КР 20-02:2009. Сейсмостойкое строительство. Нормы проектирования ((Earthquake engineering design standard). Государственное Агентство По Архитектуре И Строительству При Правительстве Кыргызской Республики, Bishkek, Kyrgyz Republic (in Russian).

СП 15.13330.2012. Каменные и Армокаменные Конструкции (Masonry and Reinforced Masonry Structures). Министерство Регионального Развития Российской Федерации, Moscow, Russia (in Russian).

A. Seismic Retrofitting Techniques for Reinforced Concrete and Masonry Buildings: Research Basis

A.1 *Addition of New Structural Elements*

A.1.1 Addition of RC shear walls

A comprehensive review of the past experimental research studies related to addition of new RC shear walls in the existing RC frames was performed by Tsionis, Apostolska, and Taucer (2014). Bush, Wyllie and Jirsa (1991) studied an existing three-story RC frame retrofitted by adding exterior walls. It was concluded that addition of new walls resulted in increase of the capacity and stiffness of the retrofitted building and changed the failure mechanism to a ductile "weak beam-strong column" mechanism. Kaltakci et al. (2008) studied the effect of adding new RC walls as buttresses in a two-story RC frame. The test results indicated an increase in the capacity and stiffness of the retrofitted structure. Kaplan et al. (2011) studied the effect of external RC shear walls added to a two-story RC frame. These exterior walls formed a C-shaped cross-section with the existing columns. The retrofitted frame showed a significant increase in the capacity and stiffness compared to the original structure. Failure of the new wall was due to shear sliding mechanism at the base.

Fardis, Schetakis and Strepelias (2013) performed an analytical study on regular and irregular RC frames retrofitted by adding new RC shear walls. The study involved nonlinear static and dynamic analyses. They modelled the walls either as fixed at their base or free to rock. The study involved actual irregular buildings and showed that new RC shear walls may not be able to improve the performance of highly irregular buildings.

A.1.2 Addition of steel bracings

A comprehensive review of the past experimental research studies on performance of RC frame buildings with new steel bracings was performed by Tsionis, Apostolska, and Taucer (2014).

Ishimura et al. (2012) presented the results of a Japanese experimental study on 4 single-story single-bay RC frame specimens with inverted-V steel braces and a rim consisting of horizontal and vertical steel members. Three different types of bracing-to-frame connections were studied: i) post-installed anchors where anchors were embedded into concrete; ii) adhesive method (bonded steel-to-concrete connection using epoxy resin), and iii) a combined method (post-installed anchors and adhesive method). RC frame was constructed using low-strength concrete. The results have shown significant improvement in the ultimate capacity of the retrofitted specimens compared to the original unretrofitted specimen. The study was also used to verify the capacity prediction equations for retrofit design proposed by JBDPA (2001). It was shown that experimental values exceeded the values calculated from the capacity prediction equations.

Liu, Wang, and Lu (2012) performed an experimental study in China on ½ scale models of 2-storey 2-bay RC frame building with and without steel bracing. The retrofitted specimen had an inverted V-shaped bracing configuration which was connected to RC frame through gusset plates welded to steel sleeves at the column bases and at the beam midspan. The design was performed based on the displacement-based design method and the braces were designed according to the Capacity Design approach. The test results showed a significant enhancement in the capacity and ductility of the retrofitted specimen compared to the original structure.

Several research studies on RC frame structures retrofitted with steel bracing were performed in the USA. Badoux and Jirsa (1990) performed an analytical study to gain understanding of inelastic seismic behavior of RC frames with weak short columns retrofitted with steel braces. They found that inelastic buckling of the braces has detrimental effect upon the behavior of a braced frame. The study also showed that inelastic buckling could be prevented by using braces that yield in compression or buckle in elastic manner at low axial loads.

Bush, Jones, and Jirsa (1991) performed an experimental study on a RC frame with deep spandrel beams and short columns using steel bracing. The bracing had a super-X configuration and a rim consisting of horizontal and vertical steel members. The bracing system was attached to the exterior of the frame using epoxy-grouted steel dowels. A 2/3rd scale, 2-bay, 3-storey frame model was subjected to reversed cyclic loading. The test results indicated a substantial increase in both lateral stiffness and capacity of the retrofitted specimen. The lateral capacity of the strengthened frame was governed by brace buckling followed by the connection failures, and column shear failures. Measured brace buckling loads were in good agreement with the predicted capacities assuming fixed connections. Vertical steel elements attached to the side faces of the RC columns also substantially increased column shear capacities. Steel dowels used to connect the bracing to the RC structure performed well, without any signs of shear failure and with a limited dowel level pullout.

Lee and Goel (1990) conducted an experimental study on a 2/3rd scale, one-bay, two-story RC beam-column frame model strengthened by an inverted-V (chevron) bracing system. It was found that added horizontal and vertical steel elements make a flexural contribution to the overall lateral capacity of the frame; this is usually not recognized in the design.

Goel and Masri (1996) tested a 1/3rd scale, two-bay, two-story RC slab-column frame specimen. They tested two different phases of the steel bracing within a building (exterior and interior bays) and compared them with performance of the original RC frame. Vertical elements were RC columns retrofitted using steel angle sections at the corners and steel straps welded to the angles. The results for the specimen with exterior bracing configuration showed an increase in the capacity, stiffness and energy dissipation due to the retrofit. This observation was also true for the retrofitted specimen with both interior and exterior braces, which showed ductile behavior throughout the testing.

A.2 *Seismic Retrofitting Techniques for Reinforced Concrete Buildings*

A.2.1 RC jacketing of existing RC beams and columns

FIB (2003) provided an overview of experimental research studies on RC frames retrofitted with RC jacketing. The results of 15 experimental studies involving cyclic loading tests on RC specimens retrofitted by RC jacketing were analyzed. Experimentally obtained bending and rotation capacities were compared with the design predictions.

One of the first research studies on this subject was performed in Japan (Hayashi, Niwa and Fukuhara, 1980). The objective of the retrofitting was to increase shear resistance and ductility of the existing RC columns. The longitudinal reinforcement was not continuous through the slab (a 3 cm gap was provided at the column ends). The specimens were retrofitted using welded wire mesh covered by mortar. The tests showed that the flexural resistance was not substantially increased, but the shear resistance and ductility were enhanced as a result of the retrofit. A shaking-table study on RC frames retrofitted by jacketing was performed by Pinho and Elnashai (2000).

Several experimental studies were performed in the USA to study the performance of RC jackets. Alcocer (1993) tested four RC beam-column specimens under reversed bi-directional cyclic loading. The beams and columns were retrofitted using RC jacketing with longitudinal

column reinforcement continuous through the slab, and the beam-column joint was retrofitted using a special assembly made of welded steel sections. The specimens experienced significant inelastic displacements and sustained up to 4% lateral drift. The retrofit was designed to change the failure mechanism to “weak beam-strong column”.

One of the key issues associated with the success of RC jacketing technique is surface preparation at the interface between the existing and new concrete. Bass, Carrasquillo, and Jirsa (1989) studied the effect of surface preparation on shear resistance over shear planes along the interfaces in RC structures. They studied various surface preparation techniques, including sandblasting, chipping, shear keys, epoxy bonding and interface reinforcement. The experiments have shown that at low displacement (slip) levels, sandblasting is as effective as any other surface preparation technique; this was also confirmed by another experimental study (Julio, Branco, and Silva, 2003). Sandblasting was performed up to 6 mm amplitude. Alternatively, chipping by hand, using a pickaxe, up to 6 mm amplitude, also showed good results. The findings indicate a good bond between the original and new concrete in the test specimens.

It should be noted that the guidelines for RC jacketing have been revised in recent years based on the research findings. For example, FIB (2003) does not recommend intermittent lap welding of the corner bars of the jacket to the longitudinal bars of the existing column through Z- or U-shaped steel inserts (see Figure A-1). There is a concern that corrosion may develop in the welded connection due to a difference in steel grade between the reinforcement in the existing column and RC jacket. Note that this recommendation is contradictory to other guidelines, such as UNIDO (1983) and КНИИПС (1996).

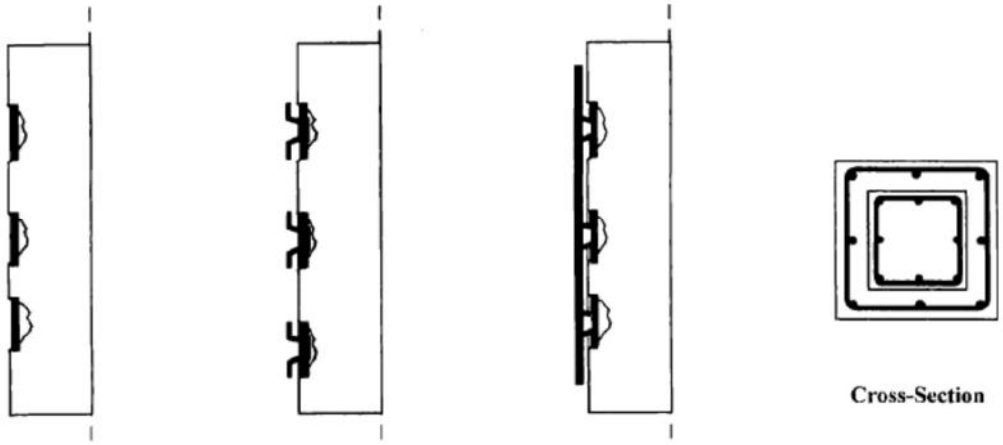

Figure A-1. U-shaped steel rebars welded to existing and new corner bars are not recommended for RC jacketing (FIB, 2003).

A.2.2 Steel jacketing of RC frame members

Steel jacketing of RC columns was studied in the USA by several researchers, including Goel and Masri (1996). They tested a 1/3rd scale specimen of a 2-story, 2-bay RC flat slab specimen subjected to reversed cyclic loading. The columns were retrofitted with steel jackets, and new steel braces were installed to brace the frame. The results showed ductile behavior of the retrofitted specimen. Lee and Goel (1990) studied the use of steel jackets for increasing flexural resistance of RC columns. Aboutaha et al. (1999) performed an experimental study on RC column specimens in which he used continuous steel jackets to increase shear resistance in critical regions. The jacket was discontinued at the column end to avoid an increase in the flexural resistance and the corresponding shear demands. The tests showed effectiveness of steel jacketing for shear enhancement.

RC column specimens with steel jackets were tested in Japan to evaluate the effectiveness of this retrofitting technique on the enhancement of ductility (Sugano, 1981; Higashi and

Kokusho, 1975; Sasaki et al., 1975). The use of steel jackets prevented shear failures and delayed the concrete crushing in RC columns.

A.2.3 Jacketing using Fibre Reinforced Polymer (FRP) Overlays

Extensive research studies have been done on this subject (both experimental and analytical), and numerous journal and conference papers are available. Priestley and Seible (1995) presented simple design models for retrofitting RC and masonry structures using FRPs based on extensive experimental research at the University of California San Diego, USA. A few comprehensive guidelines on the design of externally applied FRP overlays for retrofitting RC and masonry structures were published in Europe, e.g. FIB (2001), FIB (2006), and INRC (2014). The background for the European seismic design provisions for retrofitting RC elements using FRPs was discussed by Pantazopoulou et al. (2016).

A.3 *Seismic Retrofitting Techniques for Masonry Buildings*

A.3.1 Use of RC jacketing/reinforced plaster for seismic retrofitting of masonry walls

There is a significant research evidence related to the effectiveness of RC jacketing used for retrofitting masonry walls. Tomaževič (1999) and ElGawady, Lestuzzi, and Badoux (2004) reviewed several experimental research studies on masonry walls retrofitted using RC jacketing. Jurukovski et al. (1992) performed shaking table testing of a four-story masonry building model retrofitted using RC jacketing.

A significant increase in the shear capacity and stiffness of the existing masonry walls retrofitted using RC jacketing has been reported based on an experimental study on masonry piers (Abrams et al., 2007). ElGawady, Lestuzzi, and Badoux (2006) performed static cyclic tests on 3 half-scale brick masonry walls retrofitted either with one-sided 40 mm thick shotcrete coating or two-sided 20 mm thick shotcrete coating. The tests revealed that retrofitting using shotcrete was able to increase the lateral capacity of the specimens by factor of approximately 3.6. Specimens with double-sided coating showed higher ductility and energy dissipation.

Kahn (1984) performed an experimental study on masonry wallettes (900x900 mm and 1200x1200 mm dimensions) subjected to diagonal compression. The results showed a significant strength increase due to the shotcrete jacketing. The results also showed that adding drilled steel anchors or an epoxy bonding agent did not lead to significant improvements in the overall performance.

Several experimental research studies have been conducted on the seismic response of masonry walls retrofitted with reinforced plaster (RP) technique. Sheppard and Terčelj (1980) performed an experimental study on unreinforced brick masonry walls retrofitted with 30 mm thick two-sided ferrocement coating. The results showed an increased shear capacity by a factor of 3.0 compared to unretrofitted walls. Churilov and Dumova-Jovanoska (2012) tested 8 brick masonry walls retrofitted using two-sided ferrocement coating under reversed cyclic loading. The results showed that the effectiveness of the retrofit is more significant when applied on the squat walls (with height/length ratio less than 1.0) subjected to high axial stresses. With respect to the deformation capacity, a retrofit is more effective when walls are subjected to low axial stresses. Kadam, Singh, and Li (2014) performed an experimental study to examine the effect of ferrocement coating on enhancing seismic performance of unreinforced brick masonry walls. They tested 700 x 700 mm wallette specimens under diagonal compression. The enhancement in the capacity of strengthened wallettes was observed to be primarily governed by the reinforcement ratio, resulting in higher shear strength and ductility in wallettes with one sided-jacketing as compared to the corresponding wallettes with two-sided jacketing.

Experimental research studies on brick masonry walls retrofitted using different RP techniques were conducted in New Zealand (Hutchison and Yong, 1982; Hutchison, Yong, and McKenzie,

1984). The results showed that cement plaster coating reinforced with glass or steel fibers performed better than ferrocement coated brick masonry wall subjected to cyclic loading. Proença et al. (2012) performed testing of 8 low-strength masonry walls (1000 mm x 1000 mm dimensions) retrofitted using RP. Expanded steel mesh and fiberglass mesh were used for reinforced plaster. The specimens were subjected to cyclic loading. The retrofitted specimens showed a significant increase in the shear strength (by a factor of 2.0), ductility, and energy dissipation compared to unretrofitted specimens.

A.3.2 Use of Fiber Reinforced Polymer (FRP) overlays and strips for seismic retrofitting of existing masonry walls

Numerous experimental research studies have been performed on masonry specimens retrofitted with FRP overlays. Ehsani and Saadatmanesh (1996) and Ehsani, Saadatmanesh, and Al-Saidy (1997) investigated the effect of FRP overlays on the masonry shear strength. The specimens (triplets) consisted of 3 clay bricks covered with a GFRP fabric on both faces. Direct shear tests were performed to determine the shear strength under monotonic static loading. The results showed that the mode of failure was governed by the strength of GFRP fabric. The lighter fabric failed in tension while stronger fabric was able to maintain integrity until the masonry reached its capacity.

Abrams et al. (2007) reported a significant increase in the shear capacity by a factor of more than 2.0 for a masonry pier retrofitted with vertical and horizontal GFRP strips and subjected to reversed cyclic loading. The behavior was governed by delamination of vertical GFRP strips. A significant loss of shear capacity was observed after the delamination (debonding) of the FRP from the wall surface. The specimen demonstrated a limited ductility compared to other seismic retrofitting techniques which were considered in the study.

Reinhorn and Madan (1995) tested a masonry wall with a GFRP overlay on one face and FRP vertical strips on the other face. The wall was subjected to reversed cyclic loading. The results showed a capacity increase by a factor of 2.2 and a ductility increase by a factor of 2.5 compared to an unreinforced masonry specimen. Delamination of the GFRP was observed in the region of high tensile stresses in the middle portion of the wall. Shear capacity dropped significantly after the diagonal cracks developed. FRP wrap prevented falling of the debris after the wall failure.

ElGawady, Lestuzzi, and Badoux (2005; 2006; 2006b) performed shaking table in-plane tests on five half-scale masonry wall specimens with two different effective height/length ratios (0.7 and 1.4). The specimens were retrofitted on a single side using different configurations of glass, aramide and carbon FRPs. Retrofitting using GFRP fabric improved the shear capacity of masonry walls by a factor of about 2.5. The fundamental frequency and the initial stiffness of each specimen remained approximately constant before and after retrofitting. ElGawady, Lestuzzi, and Badoux (2007) performed reversed cyclic static tests on seven half-scale masonry specimens before and after retrofitting using FRP overlays. Three walls were first tested as unreinforced masonry walls; then, the seismically damaged specimens were retrofitted using FRPs. The fourth wall was directly upgraded after construction using FRP. The specimens had two different effective height/length ratios (0.7 and 1.4). The key parameter was the amount of FRP axial rigidity, which is defined as the amount of FRP reinforcement ratio times its E modulus. The single-side retrofitting resulted in significantly improved lateral capacity, stiffness, and energy dissipation of the test specimens. The results showed that an increase in the lateral capacity was proportional to the amount of FRP axial rigidity, and that high FRP axial rigidity led to brittle failure.

Turek, Ventura, and Kuan (2007) performed in-plane shaking table tests on five masonry walls retrofitted using GFRP strips in four different configurations (including a full-surface overlay and a combination of strips). The specimens were subjected to design-level and extreme-level

earthquake shaking for a high seismic hazard site in Canada. It was observed that all retrofitted specimens performed well during the design-level shaking, and three out of four GFRP configurations also performed well during the extreme-level shaking. The tests showed that the use of vertical GFRP strips alone is able to improve the in-plane performance of URM walls.

Arifuzzaman and Saatcioglu (2012) tested a masonry wall retrofitted with CFRP overlay covering the entire wall surface (two layers were used – one aligned in horizontal and other in vertical direction). Custom-designed fiber anchors were applied along vertical and horizontal wall edges. The retrofitted wall, along with a companion unretrofitted specimen, was subjected to reversed cyclic in-plane loading. The results showed a 50% increase in the shear capacity compared to the unretrofitted wall, and a significant drift capacity (4.5%). An increase in the flexural capacity was attributed to the presence of fiber anchors with adequate embedment length and fibre area.

Paquette, Bruneau, and Brzev (2004) investigated the effectiveness of vertical GFRP strips for enhancing the seismic performance of masonry piers in a single-story masonry building model subjected to simulated earthquake loading. The results showed that the GFRP strips were effective in increasing the pier lateral capacity and stiffness, but did not change the failure mechanism.

A.4 *Seismic Retrofitting of Horizontal Floor and Roof Diaphragms*

Several research studies related to seismic behavior of hollow core floors subjected to simulated seismic loading have been performed in New Zealand (Fenwick, Bull, and Gardiner, 2010). The research aimed at improved understanding of interaction between hollow core slabs and other structural elements, such as RC beams in RC framed buildings which are common in New Zealand. Initial experimental studies related to hollow core RC slabs were performed in the late 1980s and early 1990s (Cheung, Paulay, and Park, 1991; Restrepo-Posado 1993). The results of these studies showed that elongation which occurs in RC beams in ductile RC frames due to the formation of plastic hinges may push the beams apart and cause a premature collapse of precast floors supported by these beams. Subsequently, a few experimental studies were done on hollow core planks with concrete topping which were pulled out from the supporting concrete beam to simulate the effect of elongation (Mejia-McMaster and Park, 1994; Herlihy and Park, 2000). Various reinforcement arrangements were studied, including the one with a hairpin-shaped bar and monolithic concrete cast at the slab support region, which was a common detail in New Zealand floor construction practice. Another experimental study was performed on similar hollow core plank specimens to study the effect of rotation at the ends of planks (simulating bending). The results showed that the test specimens experienced more significant damage compared to previous tests without applied rotation (Jensen, 2006). A large scale test on a hollow core floor as a part of an RC frame was performed by Matthews (2003; 2003a; 2004). The planks were laid on mortar bedding at the slab support. The floor was subjected to reversed cyclic lateral loading. The planks experienced positive moment cracking close to the supports at relatively small drift levels (the beams remained elastic at that stage). As the test progressed, cracking occurred in the webs of planks adjacent to the RC beams. A combination of positive moment cracking and web cracking in the end planks (adjacent to the beams) led to the premature slab failure. A similar experimental study performed on individual plank units confirmed the development of positive moment cracking which led to premature slab failure. The same study also examined the effect of retrofit arrangement for the plank end zones using paper clip-shaped reinforcing bars and a low-friction bearing strip support. It was concluded that the retrofit was effective in improving the performance (Bull and Matthews, 2003). Experimental research studies also revealed an issue related to the flexural and shear capacity in negative moment zones close to the supports. The floor specimens had reinforced topping. Negative moments

in the support zone developed due to the beam elongation and relative rotation of hollow core planks at the supports. The specimens failed due to a brittle flexural mechanism, but a significant loss of shear capacity was also observed (Woods, 2008).

Several research studies on precast concrete floor diaphragms have been performed in the USA after the 1994 Northridge earthquake which revealed poor performance of these systems. The main concern was related to potential significant earthquake-induced deformations in the joints of the diaphragms (Fleischman et al., 1998). A major research initiative called Development of Seismic Design Methodology (DSDM) started in 2003 to develop a seismic design method for precast concrete diaphragms, as summarized by Fleischman et al. (2013). The initiative included several experimental studies, including studies on diaphragm joint connections subjected to tension and shear (Cao and Naito, 2009; Naito, Cao and Peter, 2009). Based on the experimental results Naito and Ren (2008; 2013) proposed a connection testing approach, which was adopted by ASCE/SEI 41-17 code. The experimental results related to the performance of precast concrete diaphragms with topping under simulated seismic loading were presented by Zhang et al. (2011). A review of the US research studies on the seismic response of precast concrete floor diaphragms is presented by Ghosh, Cleland, and Naito (2017).

A.5 *References*

Aboutaha,R.S., Engelhardt, M.D., Jirsa,J.O., and Kreger, M.E. (1999). Rehabilitation of Shear Critical Concrete Columns by Use of Recatngular Steel Jackets, ACI Structural Journal, 96 (1): 68-78.

Alcocer, S.M. (1993). RC Frame Connections Rehabilitated by Jacketing, Journal of Structural Engineering, ASCE, 119(5): 1413-1431.

Arifuzzaman, S. and Saatcioglu, M. (2012). Seismic Retrofit of Load Bearing Masonry Walls by FRP sheets and Anchors, Proceedings of the 15th World Conference on Earthquake Engineering, Lisbon, Portugal.

Badoux, M.E. (1987). Seismic Retrofitting of Reinforced Concrete Structures with Steel Bracing System, Doctoral Dissertation, University of Texas, Austin, TX, USA.

Badoux, M. and Jirsa, J.O. (1990). Steel Bracing of RC Frame for Seismic Retrofitting, Journal of Structural Engineering, 116(1): 55-74.

Bass, R.A., Carrasquillo, R.L., and Jirsa, J.O. (1989). Shear Transfer Across New and Existing Concrete Interfaces, ACI Structural Journal, 86(4): 383-393.

Bull, D.K. and Matthews, J.G. (2003). Proof of Concept Tests for Hollow-core Floor Unit
Connections, Commercial Report C2003-1, Department of Civil Engineering, University of Canterbury, Christchurch, New Zealand.

Bush, T.D., Jones, E.A., and Jirsa, J.O. (1991). Behavior of RC Frame Strengthened Using Structural Steel Bracing. Journal of Structural Engineering, 117(4): 1115-1126.

Bush, T.D., Wyllie, L.A., and Jirsa, J.O. (1991). Observations on Two Seismic Strengthening Schemes for Concrete Frames, Earthquake Spectra, 7(4): 511-527.

Cao, L., and Naito, C. (2009). Precast Concrete Double-Tee Connections, Part 2: Shear behavior, PCI Journal, 54(2):97-114.

Cheung, P.C., Paulay, T., and Park, R. (1991). Seismic design of reinforced concrete beam-column joints with slabs, Research Report 91-4, Department of Civil Engineering, University of Canterbury, Christchurch, New Zealand.

Churilov, S. and Dumova-Jovanoska, E. (2012). Analysis of Masonry Walls Strengthened with RC Jackets, Proceedings of the 15th World Conference on Earthquake Engineering, Lisbon, Portugal.

Ehsani, M.R., Saadatmanesh, H., and Al-Saidy, A. (1997). Shear Behavior of URM Retrofitted with FRP Overlays, Journal of Composites for Construction, ASCE, 1(1): 17-25.

ElGawady, M., Lestuzzi, M.P., and Badoux, M. (2004). A Review of Conventional Seismic Retrofitting Techniques for URM, Proceedings of the 13th International Brick and Block Masonry Conference, Amsterdam, Netherlands.

ElGawady, M., Lestuzzi, P., and Badoux, M. (2005). In-Plane Seismic Response of Unreinforced Masonry Walls Upgraded with Fiber Reinforced Polymer, J. Comp. for Constr., ASCE, 9(6):524-535.

ElGawady, M, Lestuzzi,P., and Badoux, M. (2006). Retrofitting of Masonry Walls Using Shotcrete, Proceedings of the 2006 NZSEE Conference, Napier, New Zealand, Paper No. 45.

ElGawady, M., Lestuzzi, P., and Badoux, M. (2006a). Analytical Model for In-Plane Shear Behavior of URM Walls Retrofitted With FRP. Composites Science and Technology, 66:459–474.

ElGawady, M., Lestuzzi, P., and Badoux, M. (2006b). Aseismic Retrofitting of Unreinforced Masonry Walls Using FRP, Composites: Part B, 37: 148–162

ElGawady, M., Lestuzzi, P., and Badoux, M. (2007). Static Cyclic Response of Masonry Walls Retrofitted with Fiber-Reinforced Polymers, Journal of Composites for Construction, 11(1):50-61.

Elnashai, A.S., and Pinho, R. (1998). Repair and Retrofitting of RC Walls Using Selective Techniques, Journal of Earthquake Engineering, 2 (4): 525-568.

Fardis, M.N., Schetakis, A., and Strepelias, E. (2013). RC Buildings Retrofitted by Converting Frame Bays into RC Wall, Bulletin of Earthquake Engineering, 11(5): 1541-1561.

Fardis, M. (2009). Seismic Design, Assessment and Retrofitting of Concrete Buildings: Based on EN-Eurocode 8, Springer, Dordrecht, Germany.

FIB (2001). Externally Bonded FRP Reinforcement for RC Structures, International Federation for Structural Concrete, Bulletin No. 14, Lausanne, Switzerland.

FIB (2003). Seismic Assessment and Retrofit of Reinforced Concrete Buildings, State-of-the-art report, International Federation for Structural Concrete, Bulletin No. 24, Lausanne, Switzerland.

FIB (2006). Retrofitting of Concrete Structures by Externally Bonded FRPs, with Emphasis on Seismic Applications, International Federation for Structural Concrete, Bulletin No. 35, Lausanne, Switzerland.

Fenwick, R. C., Bull, D. K. and Gardiner, D. R. (2010). Assessment of Hollow-core Floors for Seismic Performance, Research Report, 2010-02, Department of Civil and Natural Resources Engineering, University of Canterbury, New Zealand (https://ir.canterbury.ac.nz/handle/10092/4211).

Fleischman, R. B., Restrepo, J. I., Naito, C. J., Sause, R., Zhang, D., and Schoettler, M. (2013). Integrated Analytical and Experimental Research to Develop a New Seismic Design Methodology for Precast Concrete Diaphragms, Journal of Structural Engineering, 139(7): 1192-1204.

Fleischman, R. B., Sause, R., Pessiki, S., and Rhodes, A. B. (1998). Seismic Behavior of Precast Parking Structure Diaphragms, PCI Journal, 43(1):38-53.

Ghosh, S.K., Cleland, N.M., and Naito,C.J. (2017). Seismic Design of Precast Concrete Diaphragms: A Guide for Practicing Engineers. NIST GCR 17-917-47, NEHRP Seismic Design Technical Brief No. 13, The National Institute of Standards and Technology, Gaithersburg, MD, USA.

Goel, S.C., and Masri, A.C. (1996). Seismic Strengthening of an RC Slab-Column Frames with Ductile Steel Bracing, Proceedings of the 11th World Conference on Earthquake Engineering, Acapulco, Mexico, Paper No. 506.

GREAT (2001). Repair and Strengthening Guide for Earthquake Damaged Low-Rise Domestic Buildings in Gujarat, India, Gujarat Relief Engineering Advice Team, India.

Hayashi, T., Niwa, H. and Fukuhara, M. (1980). Strengthening Methods of the Existing Reinforced Concrete Buildings, Proceedings of the 7th World Conference on Earthquake Engineering, Istanbul, 4: 89–97.

Herlihy, M.D. and Park, R. (2000). Precast Concrete Floor Support and Diaphragm Action, Research Report 2000-13, Department of Civil Engineering, University of Canterbury, Christchurch, New Zealand.

Higashi, Y. and Kokusho, S. (1975). The Strengthening Method of Existing Reinforced Concrete Buildings, Proceedings of the Review Meeting of US-Japan Cooperative Program in Earthquake Engineering with Emphasis on the Safety of School Buildings, Honolulu, Hawaii, USA.

Hutchison, D. and Yong, P.M.F. (1982). Cyclic Testing of a Brick Wall Strengthened with a Plaster Coating of Glass Reinforced Cement, Bulletin New Zealand National Society for Earthquake Engineering, 15(4): 185-198.

Hutchison, D., Yong, P., and McKenzie, G. (1984). Laboratory Testing of a Variety of Strengthening Solutions for Brick Masonry Wall Panels, Proceedings of the 8th World Conference on Earthquake Engineering, San Francisco, USA, pp. 575-582.

INRC (2014). Guide for the Design and Construction of Externally Bonded FRP Systems for Strengthening Existing Structures: Materials, RC and PC structures, Masonry Structures, Italian National Research Council, Advisory Committee on Technical Recommendations for Construction, CNR-DT 200 R1/2013, Rome, Italy, 154 pp.

Ishimura, M., Sadasue, K., Miyauchi, Y., Yokoyama, T., Fujii, T. and Minami, K. (2012). Seismic Performance Evaluation for Retrofitting Steel Brace of Existing RC Buildings with Low-Strength Concrete, Proceedings of the 15th World Conference of Earthquake Engineering, Lisbon, Portugal.

Jensen, J. (2006). Experimental Investigation of Existing Hollow-core Seating Connections pre and post Retrofit, ME Thesis, Civil and natural Resource Engineering, University of Canterbury, Christchurch, New Zealand.

Julio,E.S., Branco,F., and Silva,V.D. (2003). Structural Rehabilitation of Columns with Reinforced Concrete Jacketing, Prog. Structural Engineering Materials, 5: 29-37.

JBDPA (2001). Guidelines for Seismic Retrofit of Existing Reinforced Concrete Buildings and Commentary, Japan Building Disaster Prevention Association, Tokyo, Japan.

JBDPA (2001a). Earthquake Resistance Evaluation Standards for Existing Reinforced Concrete Buildings and Commentary, Japan Building Disaster Prevention Association, Tokyo, Japan.

Jurukovski, D., Krstevska, L., Alessi, R., Diotallevi, P.P., Merli, M., and Zarri, F. (1992). Shaking Table Tests of Three Four-Storey Brick Masonry Models: Original and Strengthened by RC Core and RC Jackets, Proceedings of the 10th World Conference on Earthquake Engineering, Madrid, Spain, Vol. 5, pp. 2795-2800.

Kadam, S.B., Singh, Y., and Li, B. (2014). Strengthening of Unreinforced Masonry Using Welded Wire Mesh and Micro-Concrete – Behaviour Under In-Plane Action, Construction and Building Materials, 54: 247–257.

Kahn, L.F. (1984). Shotcrete Retrofit of Unreinforced Brick Masonry, Proceedings of the
Eighth World Conference on Earthquake Engineering, San Francisco, CA, USA, pp. 583-590.

Kaltakci M. Y., Arslan, M.H., Yilmaz, U.S., and Arslan, H.D. (2008). A New Approach on the Strengthening of Primary School Buildings in Turkey: an Application of External Shear Wall,
Building and Environment, 43(6): 983-990.

Kaplan H., Yilmaz, S., Cetinkaya, N., and Atimtay, E. (2011). Seismic Strengthening of RC Structures with Exterior Shear Walls, Sadhana, 36(1): 17-34

Lee, H., and Goel,S.C. (1990). Seismic Behavior of Steel Built-Up Box-Shaped Bracing Members and Their Use in Strengthening RC Frames, Report No. UMCE 90-7, Dept of Civil Engineering, The University of Michigan, Ann Arbor, MI, USA.

Liu F., Wang, L., and Lu, X. (2012). Experimental Investigations of Seismic Performance of Unretrofitted and Retrofitted RC Frames, Proceedings of the 15th World Conference on Earthquake Engineering, Lisbon, Portugal.

Matthews. J.G, Bull, D.K., and Mander, J.B. (2003). Background to the Testing of a Precast Concrete Hollowcore Floor Slab Building, Conference Proceedings, 2003 Pacific Conference on Earthquake Engineering, Christchurch, New Zealand.

Matthews, J.G, Bull, D.K., and Mander, J.B. (2003a). Preliminary Results from the Testing of a Precast Hollowcore Floor Slab Building, Conference Proceedings, 2003 Pacific Conference on Earthquake Engineering, Christchurch, New Zealand.

Matthews, J. (2004). Hollow-core Floor Slab Performance following a Severe Earthquake, Doctor of Philosophy Thesis, University of Canterbury, Christchurch, New Zealand.

Mejia-McMaster, J.C. and Park, R. (1994). Precast Concrete Hollow Core Floor Unit Support and Continuity. Research Report 94-4, Department of Civil Engineering, University of Canterbury, Christchurch, New Zealand.

Naito, C., Cao, L., and Peter, W. (2009). Precast Concrete Double-Tee Connections, Part 1: Tension Behavior, PCI Journal, 54(1):49-66.

Naito, C. J., and Ren, R. (2013). An Evaluation Method for Precast Concrete Diaphragm Connectors based on Structural Testing, PCI Journal, 58(2):106-118.

Naito, C. J., and Ren, R. (2008). Evaluation Methodology for Precast Concrete Diaphragm Connectors Based on Structural Testing. Proceedings of the 14th World Conference on Earthquake Engineering, Beijing, China.

Pantazopoulou,S.J., Tastani,S.P., Thermou,G.E., Triantafillou,T., Monti,G., Bournas,D., and Guadagnini,M. (2016). Background to the European Seismic Design Provisions for Retrofitting RC Elements Using FRP Materials, Structural Concrete, Ernst & Sohn, 17(2):194-219.

Paquette, J., Bruneau, M., and Brzev, S. (2004). Seismic Testing of Repaired Unreinforced Masonry Building Having Flexible Diaphragm, Journal of Structural Engineering, ASCE, 130(10): 1487-1496.

Pinho, R., and Elnashai, A.S. (2000). Dynamic Collapse Testing of a Full-Scale Four Storey RC Frame, ISET Journal of Earthquake Technology, Paper No. 406, 37 (4): 143-163.

Priestley, M.J.N. and Seible, F. (1995). Design of Seismic Retrofit Measures for Concrete and Masonry Structures, Construction and Building Materials, 9(6): 365-377.

Proença, J. M. et al. (2012). Strengthening of Masonry Wall Load Bearing Structures with Reinforced Plastering Mortar Solution, Proceedings of the 15th World Conference on Earthquake Engineering, Lisbon, Portugal.

Reinhorn, A.M. and Madan, A. (1995). Evaluation of Tyfo-W Fiber Wrap System for In-Plane Strengthening of Masonry Walls, Report No. 95-0002, Department of Civil Engineering, State University of New York at Buffalo, Buffalo, NY, USA.

Restrepo-Posado, J.I. (1993). Seismic Behaviour of Connections between Precast Concrete Elements, Research report 93-3, Department of Civil Engineering, University of Canterbury, Christchurch, New Zealand.

Sasaki, T., et al. (1975). An Experimental Study on Earthquake Resistant Strengthening Work for Existing Reinforced Concrete Buildings, Proceedings of the Review Meeting of US-Japan Cooperative Program in Earthquake Engineering with Emphasis on the Safety of School Buildings, Honolulu, Hawaii, USA.

Sheppard, P. and Terčelj, S. (1980). The Effect of Repair and Strengthening Methods for Masonry Walls, Proceedings of the 7th World Conference on Earthquake Engineering, Istanbul, Turkey, Vol. 6, pp. 255-262.

Sugano S. (1981). Seismic Strengthening of Existing Reinforced Buildings in Japan, Bulletin of the New Zealand National Society for Earthquake Engineering, 14(4):209–222.

Thermou, G.E., and Elnashai, A.S. (2006). Seismic Retrofit Schemes for RC Structures and Local–Global Consequences, Prog. Structural Engineering Materials, 8: 1-15.

Thermou, G.E., Pantazopoulou, S.J., and Elnashai, A.S. (2004). Upgrading of RC Structures for a Target Response Shape, Proceedings of the 13th World Conference on Earthquake Engineering, Vancouver, BC, Canada, Paper No. 1412.

Tomaževič, M. (1999). Earthquake-Resistant Design of Masonry Buildings, Imperial College Press, London, U.K.

Tsionis, G., Apostolska, R., and Taucer, F. (2014). Seismic Strengthening of RC Buildings, Institute for the Protection and Security of the Citizen, Joint Research Centre, European Commission, Ispra, Italy, 70 pp.

Turek, M., Ventura, C.E., and Kuan, S. (2007). In-Plane Shake-Table Testing of GFRP Strengthened Concrete Masonry Walls, Earthquake Spectra, 23 (1): 223–237.

UNIDO (1983). Building Construction Under Seismic Conditions in the Balkan Region: Repair and Strengthening of Reinforced Concrete, Stone and Brick Masonry Buildings, Vol.5, First Edition, United Nations Industrial Development Programme, Vienna, 231 pp.

Woods, L.J. (2008). The Significance of Negative Bending Moments in the Seismic Performance of Hollow-core Flooring, ME Thesis, Department of Civil Engineering, University of
Canterbury, Christchurch, New Zealand.

Zhang, D., Fleischman, R. B., Naito, C. J., and Ren, R. (2011). Experimental Evaluation of Pre-topped Precast Diaphragm Critical Flexure Joint under Seismic Demands, Journal of Structural Engineering, 137(1):1063-1074.

B. Glossary

Capacity = permissible resistance for a structural element (term “capacity” is more commonly used in seismic design than “resistance”)

Capacity curve = base shear versus displacement curve obtained from the pushover analysis for a specific structure (Figure 2-8). A capacity curve defines the capacity of the structure uniquely for specified lateral load distribution (load pattern). When the structure displaces laterally, its response must lie on the capacity curve. Capacity curve does not depend on a seismic hazard level.

Capacity/Demand ratio = ratio between Capacity and seismic Demand (C/D)

Collapse Prevention (CP) = performance level characterized by substantial structural damage. The structural system is on the verge of experiencing partial or total collapse, and there is a significant risk of injuries. Repair may not be technically possible.

Confined masonry wall = Masonry construction where masonry walls are first laid and then horizontal and vertical reinforced concrete confining elements are cast. In this type of construction concrete bonds to the masonry, and small-size RC columns and beams (called tie-columns and tie-beams) confine masonry wall panels[1].

Diaphragm = a horizontal structural system that serves to interconnect the building and acts to transmit lateral forces to the vertical elements of the lateral load-resisting system. A diaphragm is classified as rigid or flexible depending upon its in-plane deformability.

Ductile behavior = ability of a structure or a structural element to deform under the load beyond the elastic range without a significant loss of capacity[2].

Ductility enhancement = seismic retrofitting technique or scheme that results in enhanced (improved) ductility of a structure or a structural element (Figure 4-1).

Elastic behavior = it assumes elastic stress-strain material properties; as a result, deformation of a structure or structural element is considered to be proportional to the internal force.

Flexible diaphragm = a diaphragm where the maximum in-plane lateral displacement along its length exceeds the average interstory displacement at the story level under consideration.

Force-based seismic design = structural elements are designed for the required capacity based on the applied seismic forces, which are usually obtained from linear seismic analysis.

Gravity load-resisting system = vertical load-resisting system; it consists of all structural elements that resist the effects of applied gravity loads in a structure (e.g. dead load, live load, snow).

Horizontal diaphragm = diaphragm

Immediate Occupancy (IO) = performance level characterized by limited structural damage, in which the basic gravity load-resisting system and lateral load-resisting system retaining most of their pre-earthquake characteristics and capacities.

Lateral load-resisting system = the structural system that provides resistance against horizontal earthquake forces through vertical and horizontal components.

Life Safety (LS) = performance level characterized by significant structural damage, but partial or total collapse of the structural system is not expected. Injuries may occur, but the risk of life-threatening injuries is low. Repair may not be economically feasible.

Moment frame = moment-resisting frame or bare frame; a lateral load-resisting system consisting of beams and columns, with strong and rigid beam-column connections which are designed to resist bending[3].

Nonlinear static analysis = pushover analysis

Performance Level = a limiting damage state or condition, described in terms of the physical damage to different structural and nonstructural elements, threat to life safety of occupants/users, and post-earthquake serviceability of the structure.

---

[1] https://taxonomy.openquake.org/terms/masonry-confined--mcf
[2] https://taxonomy.openquake.org/terms/ductile--duc
[3] https://taxonomy.openquake.org/terms/moment-frame--lfm

Performance Objective = a desired level of seismic performance, expressed in terms of acceptable structural and nonstructural damage for a specified level of seismic hazard; it is possible to consider multiple performance objectives for the same design.

Performance-based seismic design = has the main goal to ensure that the structure achieves predetermined target performance at specified seismic hazard level. Seismic performance is an indicator of expected earthquake-induced damage in structural and non-structural elements.

Plastic hinge = a location in a RC or a steel moment frame system where significant deformations and damage are expected to take place during a major earthquake.

Pushover analysis = nonlinear static analysis, which consists of applying static lateral forces incrementally to a numerical model of the structure until the target performance is attained.

Rehabilitation = actions that improve the capacity of a damaged or a deteriorated structure or structural element. Rehabilitation includes repair, but it is intended to restore the original capacity.

Reinforced masonry wall = Masonry wall construction in which horizontal and/or vertical reinforcement is embedded in such a manner that two materials act together in resisting forces. The reinforcement resists tension while the masonry resists compression[1].

Repair = actions that improve the functionality of a defective/deteriorated/damaged structure or structural element. Repair may not be intended to completely restore the original capacity of the member.

Resistance = The maximum axial force, shear force, or bending moment that can be resisted by a structural element

Rigid diaphragm = a diaphragm where the maximum in-plane lateral deformation along its length is less than 50% of an average interstory displacement at the story under consideration.

Seismic assessment = evaluation of seismic safety of an existing structure

Seismic demand = seismic force demand is the amount of internal axial force, shear force, and/or bending moment in a structural element due to specified seismic hazard. Displacement demand is the amount of deformation (displacement, rotation) which a structure or structural element experience due to specified seismic hazard. Seismic demand is a result of seismic analysis.

Seismic design = structural design of a new structure having earthquake-resistant features to ensure seismic safety for specified seismic hazard level.

Seismic hazard level = earthquake ground-shaking of specified severity, developed on either a probabilistic or deterministic basis.

Seismic retrofit scheme = a combination of seismic retrofit techniques applied to different structural elements in a structure. For example, a retrofit scheme for a masonry building may involve seismic retrofitting of walls, as well as floor and roof diaphragms.

Seismic retrofit technique = a technical option for enhancing the capacity, stiffness, and/or ductility of a structure or structural element with respect to resisting earthquake effects.

Seismic retrofitting = seismic strengthening; an intervention that leads to enhancement of one or more seismic response parameters of an existing (usually undamaged) structure or structural element (stiffness, capacity, ductility, etc.) to mitigate the effects of future earthquakes.

Seismic strengthening = seismic retrofitting

Shear wall = A wall that resists lateral forces parallel with its plane; a lateral load-resisting system consisting of shear walls is called Wall system[2]. The length of a shear wall should not be larger than its height.

Stiffness and capacity enhancement = seismic retrofitting technique or scheme that results in enhanced (improved) stiffness and capacity of a structure or a structural element (Figure 4-1)

Strength = mechanical property of a construction material (e.g. compressive strength, tensile strength)

---

[1] https://taxonomy.openquake.org/terms/masonry-reinforced--mr

[2] https://taxonomy.openquake.org/terms/wall--lwal

Strong column-weak beam failure mechanism = a ductile failure mechanism for RC frames, where damage occurs first in beams, while the columns remain stronger than beams and show elastic behavior (Figure 3-24b).

Structural system = an assemblage of structural elements that are joined together to provide gravity and lateral load resistance.

Target displacement = a point on the capacity curve which represents the maximum displacement likely to be experienced by the structure at the specified seismic hazard level

Unreinforced masonry wall = Masonry wall without any form of reinforcement[1].

[1] https://taxonomy.openquake.org/terms/masonry-unreinforced--mur

C. Illustrated Seismic Retrofitting of Masonry School Buildings in Balykchy and Toktogul under the UDP Pilot Project (2016-2020)[1]

C.1 Foundation retrofit

Excavation and removal of soil on both sides of the wall to provide space for new reinforced concrete foundation beams

Horizontal anchors drilled into the existing foundation to ensure joint action of the existing foundation and new beams

Reinforcement for the new reinforced concrete foundation beam (Credit: Enkon)

New foundation beams after the concrete construction

[1] Most photographs were taken by Ulugbek Begaliev and Svetlana Brzev, except for a few photos which were taken by Enkon (as noted)

C.2 Wall Retrofit

C.2.1 Preparation of wall surface

Wall surface needs to be prepared for retrofit by removing the original plaster

Inadequately cleaned wall surface (original plaster had not been completely removed)

C2.2.2 Installation of through-wall anchors and reinforcement mesh

Anchors ready for the installation

Drilling of holes in the wall for anchor installation (Credit: Enkon)

Wall anchors after the installation
(note straight bars - before the bending of hooks)

Wall anchors in the final position
(after the wall reinforcement is placed and the anchor hooks were created)

Injecting grout in anchor holes

Exterior walls after the reinforcement installation

Interior walls after the reinforcement installation

C.2.3 Application of Shotcrete (sprayed concrete)


Reinforced wall surfaces are covered by the shotcrete (sprayed concrete) in 2 layers (photos show 1st layer)

Exterior walls after the completed shotcrete application

C.2.4 Buildings after the Retrofitting

An exterior view of the building after the shotcrete application

Exterior walls after the retrofitting

An interior view of a classroom after the retrofitting