THE NATIONAL OIL COMPANIES IN LATIN AMERICA:

ISSUES IN ORGANIZATION AND MANAGEMENT

by

Chakib Khelil
Energy Unit Chief
Infrastructure and Energy Division
Latin America and Caribbean Technical Department
World Bank

THE NATIONAL OIL COMPANIES IN LATIN AMERICA:

ISSUES IN ORGANIZATION AND MANAGEMENT

Chakib Khelil, World Bank

1. Background. During the last one hundred years the world has witnessed a spectacular expansion of the oil sector due to the growing and continued importance of petroleum and its derivatives in both developed and developing countries' energy requirements. Starting with the Drake oil discovery, the oil era saw the private U.S. sector grow very strong quickly: initially it went through a very anarchic phase brought about by unregulated fierce competition and then later in a phase that saw the survival of the fittest that achieved a quasi monopoly of the oil sector. However, the latter has been marked since its birth by Government desire to regulate, not necessarily only in the U.S. but also in other European countries and Japan. The oil monopoly in the U.S. was broken down by antitrust laws with the establishment of several competing entities, some of which have only been absorbed recently by others in the wave of acquisitions and mergers (Table 1). It is worth mentioning as a historical interest that there was one effort, that failed, to set up a Federal U.S. oil company during President Carter's Administration.

2. In the early 1900's state oil companies were first established in Europe in Austria, France and Italy and also for the first time in Latin America in Argentina, with the establishment of Yacimientos Petrolíferos Fiscales (YPF). By the early 1960's most Latin American countries had

already their State Oil Companies: Petroleos Mexicanos (PEMEX) of Mexico, Empresa Colombiana de Petroleo (ECOPETROL) of Colombia, Corporacion Estatal Petrolera Ecuatoriana (CEPE) of Ecuador, Petroleos del Peru (PETROPERU), Petroleo do Brasil (PETROBRAS), Yacimientos Petroliferos Fiscales de Bolivia (YPFB), Administracion Nacional de Combustibles, Alcohol y Portland (ANCAP) of Uruguay, Corporation Venezolana del Petroleo, now Petroleos de Venezuela S.A. (PDVSA) and Empresa Nacional del Petroleo (ENAP) of Chile to name a few (Figure 1). These national oil companies (NOC's) are all members of Asistencia Reciproca Petrolera Estatal Latino Americana (ARPEL), a regional organization promoting mutual cooperation and assistance in the oil sector. These oil companies are responsible for all petroleum related activities including the gas sector except for two countries: Brazil, where gas is distributed by State companies such as Companhia do Gas do Estado do Sao Paulo (COMGAS) and Companhia do Gas do Rio de Janeiro (CEG) and Argentina, where Gas del Estado is entrusted with the transmission and distribution of gas.

3. The wave of establishment of NOC's continued in the 1960's following the footsteps of the independence movement in Africa (SONATRACH of Algeria, PETROCI of Ivory Coast, TPDC of Tanzania, etc.), and finally in the 1970's with a new wave concentrated in Europe in response to the oil crisis (VEBA of Germany, BNOC of the United Kingdom, STATOIL of Norway).

4. Scope of the Paper. This paper analyzes the most important issues that have faced and are still facing the organization and management of NOC's in Latin America based on the Bank's experience in the petroleum sector. While this experience has been extensive only in Colombia, Ecuador, Peru,

Brazil, Bolivia and Argentina, it appears to be rather representative of issues encountered elsewhere in Latin America. The paper concentrates on a regional overview but case by case analyses of each of the NOC's are also included in the Annex. The most important issues cover (i) the energy sector organization and management, and (ii) the role and organization of the NOC's and their managerial and financial autonomy. Finally the paper will draw some general lessons that have been learned through this exercise.

5. Rationale for the NOC Establishment in Latin America. The rationale for NOC establishment in Latin America was no different than that used by European Governments in setting up their own NOC's. Clemenceau, a French Army General, declared that oil was too serious a business to be left in the hands of a few private companies. NOC's were established to achieve not only specific economic (self-sufficiency in oil, export of surplus to earn foreign currency exchange, minimize cost of imports, etc.), but also political (control over a natural resource to benefit public interest, national prestige) and social objectives (achieve high rate of employment, provide jobs and development to less developed regions of the country, etc.). In addition, NOC's were responsible for mastering the petroleum sector technology with a view to promote national industries for materials, equipment and services.

6. In setting up NOC's, the Governments recognized that the NOC's were responsible not only for economic services, but also for social and political tasks. In addition, most of them were less competitive than multinational companies that had considerable sunk investments and diversified sources of

production and markets. In order to make up for this, the Governments in the region supported the NOC's with subsidies, loans and equity injections, granted them preferential exploration areas, distribution monopolies and representation of the Government in dealings with other countries and guaranteed NOC's loans in international markets. In certain cases, the Government allocated part or all of the economic rent that accrued between the cost of locally produced oil and price of imported crude to the NOC's.

7. While the Government injected considerable capital and human resources in order to establish a financially viable national entity, the NOC's management was faced from the beginning with the tasks of achieving sometimes two conflicting objectives, i.e., achieve an adequate economic return on investment and at the same time meet socio-political goals.

8. Development of Latin American NOC's. Except for Argentina where private national oil companies developed concurrently with YPF and where the exploration domain attributed to the NOC was limited, most Latin American NOC's were set up to carry out petroleum operation activities over the whole country, i.e., no risk contract was allowed to private oil companies except for areas already assigned to them. In most cases, the NOC's took over operations and personnel previously managed by the international/local companies.

9. Today, however, Mexico remains the only country in Latin America that still does not allow risk contracts to private oil companies. In response to the oil crisis of the early 1970's that proved to be costly to most Latin American economies, legislative/contractual changes were brought

about by the need to attract investments by the International Oil Companies (IOC's). For example, Peru, Colombia, Brazil, Ecuador and then recently Argentina all formulated new or improved contractual arrangements in the form of production sharing, association and service contracts. These provided new incentives and more flexible terms which in turn attracted considerable new investments in exploration by IOC's in those countries. This evolution in the contractual framework was sometimes accompanied by restrictions in the NOC expenditures in exploration due to the Government budget constraints.

10. Table 2 lists some key operating data for the Latin American NOC's. The figures apply to the years 1983-1985 for all companies except Petroperu where figures for 1981 were used and only intends to give orders of magnitudes for various parameters. Tables 3 and 4 taken from L.E. Grayson (National Oil Companies, John Wiley and Sons, 1981) although outdated (1974) give the same general information for some IOC's and European NOC's for general comparative purposes. Given their socio-policital objectives in addition to their economic ones, the performance of NOC's cannot be evaluated using the same indicators as the IOC's. In addition to how profitable they are, NOC's should be evaluated in how well they have implemented Governmental policy in the petroleum sector and how satisfied the people are with the goods and services they deliver.

11. In order to achieve more autonomy and counter-balance the Government influence, the NOC's naturally tried to achieve a power base of their own. This could be done by investing in locations which were of interest to powerful politicans and through recruitment of a large, highly

trained and skilled workforce who could provide a loyal constituency. The NOC's efforts to diversify their activities and in some cases go into foreign operations also tend to make Governments evaluation and control more difficult.

12. Energy Sector Organization. There are three levels of decision making that influence the energy sector in general and the petroleum sector in particular: the highest resides with the Government which agrees on macroeconomic objectives for the country such as the economic growth rate, investments levels, balance of payments, fiscal deficits, etc. The second level of decision consists of sector allocations among for example agriculture, industry, energy, education, others. Finally, the third level of decisions entails the allocation of resources among public sector enterprises responsible for a specific subsector such as the petroleum sector.

13. Generally, the NOC's in Latin America reports to the Ministry of Mines and Energy, Energy Secretariat, or Ministry of Public Works (referred to as Sector Ministry). The Sector Ministry (SM) is responsible for ensuring that the National Petroleum Policy is implemented. After review by the SM, the budget of the NOC is approved by the Government through the Ministry of Finance. The NOC is required to submit a four or five year plan to the Ministry of Planning or its equivalent through its SM. The Ministry of Planning (MP) consolidates and reviews the various sectors' investment programs taking into account the government macroeconomic objectives. The MP then submits for Government discussion and approval alternative investment

programs proposals. While the Government may consider the program as part of the country's investment plan for planning purposes, the Government approves NOC's first year budget only. This of course raises the issue that NOC's cannot count on a medium to long term commitment of expenditures by the Government. As a result, this impacts greatly on the ability of the NOC's to plan ahead their financial and human resources. Only lately have the IOC's experienced this uncertainty on their side due to recent market price volatility and fluctuations.

14. Pricing and setting of excise tax levels of petroleum products and gas derived products are the responsibility of the Ministry of Mines and Energy after consultation with the Ministry of Finances. Because of the political sensitivity of pricing decisions these are not made without a broad consensus in the Government. Also before pricing decisions are made the NOC usually have an opportunity to present their views on the impact these decisions would have on the NOC investment programs and financial prospects.

15. In Latin America investment programs are prepared by the entities responsible for the subsector. They are then consolidated at the sector level (the Ministry of Mines and Energy) and reviewed and approved at the Government level (through the Ministry of Planning). This is a bottoms-up operation where the Government then proceeds with reallocations, sometimes cutting across the board without segregating between profit and non-profit earning entities or taking into account possible impact on macroeconomic objectives of the country. Only recently in certain Latin American countries has been an effort made to carry out a top down resources allocation taking into account macroeconomic objectives such as, for example, the need to limit

investment expenditures in the public sector, reorient expenditures to meet social and other needs and reduce public debt. An effort has also been made in some countries (Colombia and Brazil to a certain extent) to develop an energy sector strategy aimed at achieving the least cost energy option from the country's point of view. In some countries, a National Energy Board (Colombia) is being envisioned to oversee a rational development of energy resources taking into account the country's macroeconomic objectives. In Brazil, an Energy Strategy Study has been initiated by the National Energy Commission (reporting to the President) in cooperation with the public sector energy companies (Electrobras and Petrobras) and the participation of all interested Ministries and State Gas Distribution Companies such as COMGAS of Sao Paulo State.

16. Role of the NOC. As a public enterprise, the NOC is responsible for implementing the country's petroleum sector policies. However, in many countries, the NOC not only collects excise taxes on behalf of the Government, but also monitors the IOC's fulfillment of their contractual obligations in terms of work and investment program. As a result the NOC has a dual role which implies great demand on the staff time to inform and represent Government interests. In Ecuador, the Ministry basically duplicates and directs the NOC work while carrying out also a close monitoring of the IOC's. The NOC is generally very much involved in contract negotiations with IOC's and even in carrying out much of the groundwork for a new petroleum legislation.

17. Organization and Management of NOC's. Latin American NOC's are generally organized along centralized functional geographical lines. Functional lines comprise, in most cases, areas of activities such as exploration/production, industrialization (that may include refining and transport by pipelines), marketing, engineering/project development. In some instances, activities such as drilling services constitute a separate division. Operations in the field either report directly to the corresponding functional area at headquarters or to a coordinator-administrator in the field who in turn report directly to the General Manager and laterally to the functional managers. Support functions such as finances, personnel, planning and organization, legal and logistics are generally centralized at the level of the general management whose role is to run the company on a day-to-day basis. To date, there is no company that has a completely decentralized organization where for example the support functions such as finances, planning and human resources are decentralized in the functional areas in order to provide autonomy to the functional areas and improve coordination. This is mainly due to the NOC's lack of sufficient number of competent managers. Some of the NOC's lost staff especially during the 1970's when top quality personnel went to work in better paying jobs in other countries. An effort has been made in some companies to set up planning groups within the functional areas to coordinate the planning effort with the Corporate Planning group of the company, draw on technical expertise in the functional area and make the planning exercise meaningful and realistic.

18. Recently, the Government of Bolivia decided to decentralize YPFB considering it to be too large to manage and cost inefficient. While this is still being done, the Government is looking towards the establishment of about four functional entities fully accountable for their area of responsibility but whose objectives and programs are coordinated at the level of a holding company. Also, the Government of Argentina has decided to streamline YPF organization into functional areas (Annex). It is not known at this stage how much autonomy (in terms of human resources and finance) these areas will have.

19. The responsibility of the General Manager (Executive Vice President, President or Director in other cases) vary from company to company, but generally his flexibility in running the company on a day-to-day basis is limited in terms of personnel policies and financial responsibility. In terms of personnel policies, he is bound by labor laws and deals with unions of workers, sometimes a large number of them. Managers are under great pressure to hire more workers. It is very difficult for a manager to terminate a worker even for objective reasons. In Peru there are no provisions for worker's retirement. In terms of financial expenditures, the General Manager is usually authorized to approve only small amounts by oil industry standards without having to go back to the Board of Directors. While a program of works and a budget is approved at the beginning of the fiscal year, this approval does not mean that the General Manager can proceed with expenditures without first submitting it for approval to the Board. Level of approval of expenditures at various levels of the NOC hierarchy is limited and is inconsistent with the required flexibility and risk in the

petroleum sector. In addition, awards for procurement of goods and services have to be submitted for the approval of the Board.

20. While the Board of Directors has sometimes included people with expertise in the oil sector (Case of Board of Petrobras) it includes in general representatives from the Ministry of Energy, Economy/Finance, and Defense. In certain NOC's the General Manager does not participate in the decision by the Board. While in Colombia and Ecuador the Chairman of the Board is the Minister of Energy, this is not so in Peru, Argentina and Brazil. The Chairman of the Board/General Manager/President is always nominated by the Government. As a result, the Government exercises an important role in running the NOC through its representatives on the Board and management of the NOC's. At the same time, the Board and sometimes the higher management staff level of the NOC only last as long as the political party that nominated them holds power in the government. As a result this system does not provide for continuity and stability of NOC management.

21. A proposal has been made recently in Argentina to give YPF some autonomy through a yearly contract-plan to be agreed between YPF and the Government. This contract-plan would specify the objectives to be assigned in agreement with the NOC; in addition, it would also specify the Government's commitment to provide the financial resources and appropriate trade, finance and labor legislation required for an efficient operation of the NOC. YPF would then have the autonomy through the strengthened role of the Executive Vice President to achieve the objectives at the least cost, without having to go back to the Board for the day-to-day decision. While

be an improvement over the existing status, the chances for the success of the contract-plan approach in Argentina would depend to a large extent on the Government's plan to relax the various constraints (pricing and taxation of petroleum products, cost of goods and services in the petroleum sector) in addition to various finance, trade and labor legislations.

22. Financial Autonomy. While managerial autonomy of Latin American NOC's is only very limited, financial autonomy is even more difficult to achieve for the simple reason that a large part of the financial resources required for financing the NOC investment programs are controlled by the Government. While this is a normal prerogative of the Government owner-shareholder, the decisions for allocations of these resources are sometimes unpredictable since they are tied to the vagaries of the nation's economy. Often cuts are made across the board for all public enterprises without due consideration for the impact that these decisions have in terms of lost production, increased cost due to delays and credibility of NOC with foreign partners. Even when there are no budget reallocations and only control by the Government agencies, these are in general formal only (this is true even in France or Italy) because the Government civil servants generally do not have the training and expertise (and the time) to review whether the investment program which is proposed by the NOC (i) makes sense for the national economy; (ii) represents the least cost solution for achieving the objectives assigned to the NOC; (iii) is of a higher priority over other investments.

23. As an extreme example of lack of financial autonomy, CEPE of Ecuador receives an income for each barrel of oil produced either directly or through a joint venture with a foreign oil company. This income is defined by law as the cost of locally produced oil plus a return of 15%. In this sense CEPE is treated like a Government Department. As a result, this treatment does not take into account the high risk associated with petroleum operations that would justify a higher return, the need for increased revenues to develop new and more expensive reserves and the need to provide CEPE with an incentive to be an efficient company.

24. In Peru and Colombia, the NOC's receive a share of the revenue per barrel sold at the pump. While this could ensure adequate revenues to the NOC if the Government were to maintain price levels in constant terms in relation to international levels and the same margin for the NOC, this is not always the case because of the political sensitivity of increases in petroleum prices. As a result, not only the Government may not increase prices, but it may also decide to cut into the share of the NOC in the price per barrel because of its needs to increase Government revenues. At the same time, because of the unpredictability of the timing and level of price increases which indirectly control NOC's revenues, the NOC's have considerable difficulty in planning ahead their short to medium term investment program.

25. Petrobras has been apparently more successful than most NOC's in Latin America in obtaining petroleum product prices increases by the CNP (Conselho Nacional de Petroleo that regulates petroleum products prices in

Brazil) on the bases of its financial requirements to achieve agreed upon targets of production of the national plan and a regulation that assures Petrobras a 15% return on operating assets. Petrobras annual budgets are submitted for approval to a Federal Entity for the Control of State Enterprises (SEST). As a result, Petrobras receives a per barrel fee at the refinery outlet reflecting import prices parity for both imported and locally produced crude (Brazil imports about half of its consumption). When oil prices were high, Petrobras was able to keep the margin between import price and cost of locally produced oil (referred to as the economic rent). The Government, until recently, got about 8% of the product prices at the pump (now about 17%). Today, however, with the decline of oil prices, the element of economic rent has been squeezed out and Petrobras has proposed to the Government for further price increases that may not necessarily reflect import parity prices and sound economics. In the context of the present economic difficulties of Brazil, Petrobras' proposal for price increase is unlikely to be granted.

26. In the case of IOC's, the signals for allocation of their resources are given by the international oil market prices. While the IOC's have to evaluate the risks associated with oil price movements as they affect their profitability, they still plan their activities on a long-term basis through contingency planning. The NOC's in Latin America not only cannot do any meaningful long-term planning but they sometimes await budget allocation well into the fiscal year.

27. Until the early 1980's the NOC's in Latin America were able to finance their investment programs and borrow against their balance sheets and

projections of their financial situation based in turn on an increasing oil price scenario. As a result, they were not only able to borrow (sometimes on behalf of the Government) from Government Export Credit Agencies but also from commercial banks. The NOC's had also lines of credit and easily set up revolving funds to cover their short term expenditures. However, with the debt crisis of most Latin American countries, the commercial banks have found it difficult to make loans to the NOC's given the issue of creditworthiness of the countries.

28. Procurement of Goods and Services. Each NOC has its own procurement procedures for goods and services. These procedures are not standardized in all cases. Generally, for purchases of goods certain contract amounts are specified for direct purchase, price quotations and bid invitations after publication in local and international press similar to the procedure used in the World Bank. However, certain countries' internal procedures are very cumbersome for the NOC's, requiring in some instances not only the company's board approval but also a review by the Attorney General and the Audit Court. This results in considerable delays in project implementation. Ecopetrol has developed a system whereby they proceed to continuously prequalify companies (both local and international) using objective quantitative criteria for their evaluation. This list of companies is updated annually upon receipt of information by the companies interested in providing goods and services to Ecopetrol. Whenever Ecopetrol requires goods or services, they would call upon the prequalified companies to bid.

29. Lessons from Experiences of NOC's in Latin America. Three main categories of issues stand out in the analyses of the experiences of NOC's in Latin America in the areas of organization and management:

1. Conflicting objectives assigned by the Government to NOC's;

2. Autonomy of NOC's versus the degree of Government involvement in NOC's decision making; and

3. Evaluation of NOC's performance by the Government.

30. With a view to mitigate the problems relating to conflicting objectives assigned to the NOC's, the Government on the one hand would need to define the sector wide objectives by ensuring that macroeconomic objectives and policies (pricing, trade, labor and financing) would stress the economic role of the NOC and minimize as much as possible the socio-political role of the NOC. On the other hand, the NOC's objectives would need to be defined in a Corporate Plan with specific targets and intermediate benchmarks to monitor performance. Another way to define NOC's objectives would be through a Performance Contract to be discussed, negotiated and agreed upon with Government. The performance contract would not only define the company's obligations but also those of the Government. A performance contract would be preferable to a corporate plan since the two parties (NOC and Government) would use the opportunity for negotiations to understand the other side's constraints and concerns. An independent party such as an entity like SEST in Brazil (para. 25, 32) could possibly arbitrate the process to avoid abuses.

31. Concerning the issue of autonomy of NOC's versus the degree of Government involvement in the NOC decision-making, it is important that the Government specifically identifies what decisions it should make, while at the same time allowing adequate managerial autonomy for NOC's. For example, the Government would need to:

(i) be involved and make the major decisions on long range planning of the NOC activities consistent with the macroeconomic objectives of the country (the Government would delegate this role to the Board of Directors);

(ii) ensure intersectoral coordination (through the Ministry of Planning);

(iii) regulate pricing decisions of petroleum and gas-derived products (through the Sector Ministry in coordination with the Finance Ministry);

(iv) review financing decisions by the NOC that affect public funds (through an agency like SEST in Brazil and the Ministry of Finance);

(v) assign basic objectives to the NOC such as production targets and investment levels;

(vi) appoint a Chairman of the Board of Directors and Directors. The Board of Directors should be nominated under a fixed term, have members with the the experience and stature needed for the job, and be well compensated. While the Board of Directors in Latin America NOC's are generally officials of the Government, experience in developed countries allow some Board members to come from outside (other industries, pension funds, etc.). (See Tables 5 & 6 for a summary on this subject). While the Chairman could also be managing director[1/], Executive Vice President, President or General Manager of the NOC, the Government would need to allow autonomy to the NOC's to hire its executive management with the required expertise, experience and know-how. It is important that the managerial skills are constantly improved through appropriate selection, promotion and training. Managers should be well compensated in relation to their level of responsibility and performance.

(vii) evaluate periodically the performance of the NOC's in relation to its assigned benchmarks and institution objectives, in particular on efficiency and profitability of the NOC; and

(viii) reward or penalize the Managing Director on his performance.

1/ It is however preferable that the chairman not be the Managing Director of the NOC to ensure accountability of Management to the Board.

On the other hand the government would need to avoid:

(i) getting involved in a priori control of operational expenditures; and

(ii) consolidating the NOC budget into the Government budget as it invites interference with expenditures on each line item.

32. In Latin America, most Government would also need to streamline the organization in the sector and raise the quality of the skills requirements by (i) eliminating excessive interference in day to day operations by the Sector Ministry; and (ii) setting up a central advisory unit which would carry out the needed analyses for informed decisions by the Government. The benefit of this unit would be to provide the Government with umbiased technical advice outside the Sector Ministry and would make up for the mere formal control by the latter and other Ministries. This unit, which could be set up outside the Sector Ministry, reports directly to the highest level of power should be (i) small and well staffed with appropriate sector expertise and have (ii) a clear advisory mandate. In Brazil, for example, this function is assumed by SEST (Unit for the Control of all State Enterprises) which is set up within the Planning Secretariat, which until recently reported directly to the President of the country. Now SEST reports to the Ministry of Finances which has also taken over the role of Planning.

33. While the holding company concept for NOC (PETROVEN of Venezuela) is not widespread in Latin America, it is important to note that there are

advantages and disadvantages to a holding company concept. The advantages consist of: economy of scale, more effective in international export and capital markets, easier to liquidate a non-viable subsidiary than the NOC, effective buffer against political interference. The disadvantages consist of: could become very political and bureaucratic, could promote monopolistic behavior, rather than close non-viable operations they may shift funds, inventories and skilled staff from profitable to unprofitable companies. Accountability for performance is difficult to trace. Holdings add another managerial layer where skilled managers may be in short supply.

34. Concerning the evaluation of NOC's performance by the Government through the NOC's Board of Directors and the Sector Ministry, it is important that the NOC's provide for a timely, reliable and adequate flow of information particularly in areas of cost accounting and management information systems (MIS). There is a need also to have the Government agree with the NOC on targets, benchmarks and indicators of performance. It is not necessary that these indicators be all quantitative. For example under Korean performance evaluation system, 30% of the target is composed of qualitative indicators: corporate planning, research and development, MIS and internal control systems and the quality of service. In addition, qualitative indicators could include pollution of environment and safety regulations.

Restructuring of U.S. Oil Industry

Companies		Date of Sale	Purchase Price		Shares Traded Millions	1984 - 1985 Rank*		Buyer's Stockholder Equity ($Billion)	
Buyer	Seller		$ Billion	$ Offer/Share		Buyer	Seller	1984	1985
Chevron Corp.	Gulf Energy Oil Corp.	March 1984	13.2	80	85	5-4	8--	14.1	14.8
Texaco Inc.	Getty Oil	Jan. 1985	10.1	128	28	3-5	15--	14.7	13.1
DuPont	Conoco Inc.	1981	7.4	--			14-15	11.4	NA
U.S. Steel Corp	Marathon Pet. Co.	Jan. 1982	6.2	125	30	--	16-14	NA	NA
Mobil Corp.	Superior Oil Co.	May 1984	5.7	45	36	2-2	21--	13.9	13.6
Royal Dutch Shell	U.S. Shell	April 1985	5.7	58		--	7-6	11.4	12.5
U.S. Steel Corp.	Texas O&G	1986	5.4	17.42	38.9	--	39-33	NA	1.5
Occidental Pet. Corp.	Cities Service	Dec. 1982	4.0			13-12	--	4.6	2.9
Coastal Corp.	Am. Nat. Gas	March 1985	2.45	65	18.75	34-35	--	0.6	0.6
Diamond S. Corp.	Natomas	1983	1.4			19-19	--	2.7	2.7
Phillips Pet. Co.	Aminoil	Oct. 1984	1.3						
Philips Pet. Co.	General Am.	Feb. 1983	1.14	50					
		TOTAL	63.99						

Source: Journal of Petroleum Technology, May 1986

* From Oil and Gas Journal "Top 400" list

TABLE 1

TABLE 2

Some Key Operating Data of Latin American NOCs

	CEPE Ecuador	YPFB Bolivia	ECOPETROL Colombia	PETROPERU Peru	YPF Argentina	PETROBRAS Brazil
Established	1972	1936	1948	1946	1907/22	1938/53
State Owner	100%	100%	100%	100%	100%	85%
Govt. Entity with Regulating Functn	MME CONADE MFIN CONTROL PROCUR.	MME PLAN MFIN CONTROL	MME PLAN MFIN CONTROL	MME PLAN COFIDE CONTROL	MOP/SE ECO/FIN SGEP	MME EC/FIN CNP SEST
YEAR	1985	1985	1983	1981	1984	1985
Prod.by NOC ('000 tons/Y)	2,750	700	3,500	3,000	16,700	28,000
Total	14,000	850	8,550	9,500	24,500	28,000
Ratio %	20	82	41	32	68	100
Invstmts NOC (US$ Million)	130	80	400	200	710	2,200
Employees	4,100	7,600	8,000	8,700	33,000	50,000
Revenues (US$ million)	1,800	500	1,800	1,300	2,771	17,100
Net Income (US$ million)	16	100	10	2	(941)	368
Assets (US$ million)	800	1,510	1,460	1,400	6,900	13,800
Debt/Equity	34/66	16/84	65/35	67/33	negative	51/49
Net Income/ Revenues %	0.9	20	0.6	0.1	negative	2.2
Net Income/ Assets %	2	6.6	0.7	0.1	negative	2.7
Revenue/ Employee ('000$US)	439	66	225	149	84	342
Assets/ Employee ('000$US)	195	199	183	161	209	276
Year Invst./ Employee ('000$US)	32	11	50	23	22	44
Oil Prod./ Employee ('000 tons/yr)	0.7	0.1	0.4	0.3	0.5	0.6

PRINCIPAL ABBREVIATIONS USED IN TABLE 2

MME, MOP, SE	:	Ministry of Mines and Energy, Ministry of Public Works, Secretariat of Energy
CONADE, PLAN	:	National Council for Development, Planning Ministary
ECO/FIN	:	Ministry of Economy/Finances
MFN	:	Ministry of Finance
COFIDE	:	Financial Council for Development
CNP	:	National Petroleum Council, Regulates Petroleum Sector
CONTROL	:	Controlaria: Audit Court
SGEP	:	General Syndicate for State Enterprises-Auditing Government Agency
SEST	:	Secretariat for the Control of State Enterprises
PROCU	:	Procuradoria - Attorney General

Company Comparisons - Operating Figures

		Standard Oil Indiana	Shell Oil USA	Phillips	CFP	AGIP	ENI
Gross income (turnover)	(million $)	10,025	8,418	5,106	9,120h/	6,139c/	8,748
Net income	(million $)	970	620	430	373h/	64	(89)
Assets	(million $)	8,915	6,129	4,028	7,818	4,175	5,493
Long-and medium-term debt	(million $)	1,427	976	658	874	1,014	1,351
Yearly investment	(million $)	1,826	929	628	234	905	1,274
Issued capital	(million $)	1,875	233	191	227	450	1,636
Employees		47,217	32,287	30,802	27,800	35,875a/	92,420
Production: oil (million tons per year)		45.6	30,6	11.2	70.0	16.7b/	16.7
gas (million M^3 per year)		39,392	21,802	7.67g/		15,300	15,300
Refined products (million tons per year)		61.6	55.3	34.4	58f/	37.4	37.4

Notes: 1 lira = $0.0015
1 FF = $0.213 October 31, 1974

a/ AGIP 1974 report gives 7.919 employees. ENI report gives 28% of 78,535 employees in gas or oil sectors, to which are added 13,855 overseas employees, assumed to be in gas or oil sectors.

b/ Equity and buy-back. Total production was 41.2 million tons.

c/ ENI report gives sales of $7,488 for oil, gas, engineering, and construction.

d/ Fondo di dotazone (establishment fund).

e/ Profit of holding company ENI was $0.64 million. This figure quoted by DAFSA.

f/ Sales at home and abroad.

g/ Million tons per year.

h/ Consolidated results.

TABLE 3

Company Comparisons - Ratios

	Standard Oil Indiana	Shell Oil USA	Phillips	CFP	AGIP	ENI
Profit/sales (per cent)	9.7	7.4	8.4	4.1	1.0	(1.0)
Profit/assets (per cent)	10.8	10.1	10.7	4.8	1.5	(1.6)
Sales/employee (thousands of $)	212	260	166	328	171 a/	95
Assets/employee (thousands of $)	189	190	131	281	116	59
Yearly investment/employee (thousands of $)	39	29	20	8	25	14
L & M debt/total liabilities (per cent)	16	16	16	11	24	25
Oil production/employee (thousand tons per year)	0.97	0.95	0.36	2.52	0.47 b/	0.18
Refined products/employee (thousand tons per year)	1.30	1.71	1.12	2.08	1.04 c/	0.40

a/ If sales figures for hydrocarbon sector given ENI report is taken ($7,488 million), then sales/employee = $208,000. If AGIP report figure of employees is taken (7,919), the figure is $775,000; if overseas employees are added to this (13,855), the figure is $281,000.

b/ If AGIP report figure of employees is taken (7,919), production/employee es 2.11 thousand tons; if overseas employees are added to this (13,855), the production/employee is 0.76 thousands tons.

c/ If AGIP report figure of employees is taken (7,919), refined products/employee is 4.72 thousand tons; if overseas employees are added to this (13,855), refined products/employee is 1.71 thousand tons.

TABLE 4

Table 5: CONVENTIONAL ROLES IN CORPORATE GOVERNANCE

Roles and functions	Basic characteristics
Ownership role (owners)	
Provide risk capital	- Long term view
Define enterprise charter	- Board objectives
Appoint and dismiss the Board of Directors	- Board, non-involved, monitoring of performance
Strategic and Supervisory Role (Board of Directors)	
Provide strategic guidance	- Medium-term view
Appoint, advise, reward and dismiss top management	- Specific strategies and operational targets
Control performance	- Close performance monitoring
Operating Role (Management)	
Develop and manage the enterprise according to agreed upon objectives	- Shorter-term view - Development of alternative strategies and plans - Day-to-day operations

Source: Industry, Trade and Finance Operations Division
China Department - The World Bank

Table 6: BOARD (OR SUPERVISORY BOARD) STRUCTURES IN EIGHT COUNTRIES

United Kingdom, Board of Directors: Traditionally a majority of inside (executive) directors, although nonexecutive directors now outnumber executives on many larger board of directors.

France, Board of Directors (Counseil d'Administration): Minimum of two-thirds outside directors required. The chairman of the board is also the president of the company. There is also an alternative two-tier board system available in France. However, the one board system is the dominant one.

West Germany, Supervisory Board: Half are outside directors, elected by shareholders, including the chairman. The other half are employee and union representatives. (Two-thirds and one-third respectively). None of the directors of the supervisory board may be elected to the management board.

Sweden, Board of Directors: A Majority of outside directors required; the chairman of the board cannot also be president (managing director). A minority consisting of corporate executives (sometimes the president alone) plus, usually, two employee representatives elected by unions.

United States, Board of Directors: Most corporation have a majority of outside directors; the board chairman is in most cases also the president.

Brazil, Administrative Council: A maximum of up to one-third of the members of the administrative council may be elected to the management board. The remaining majority is normally outside directors.

Japan, Board of Directors: Most directors are the executives of the corporation; outside directors are rare.

Korea, Board of Directors: Most directors are the executives of the corporation; outside directors are rare.

Source: Industry, Trade and Finance Operations Division
China Department - The World Bank

FIGURE 1

THE NATIONAL OIL COMPANIES

OF LATIN AMERICA

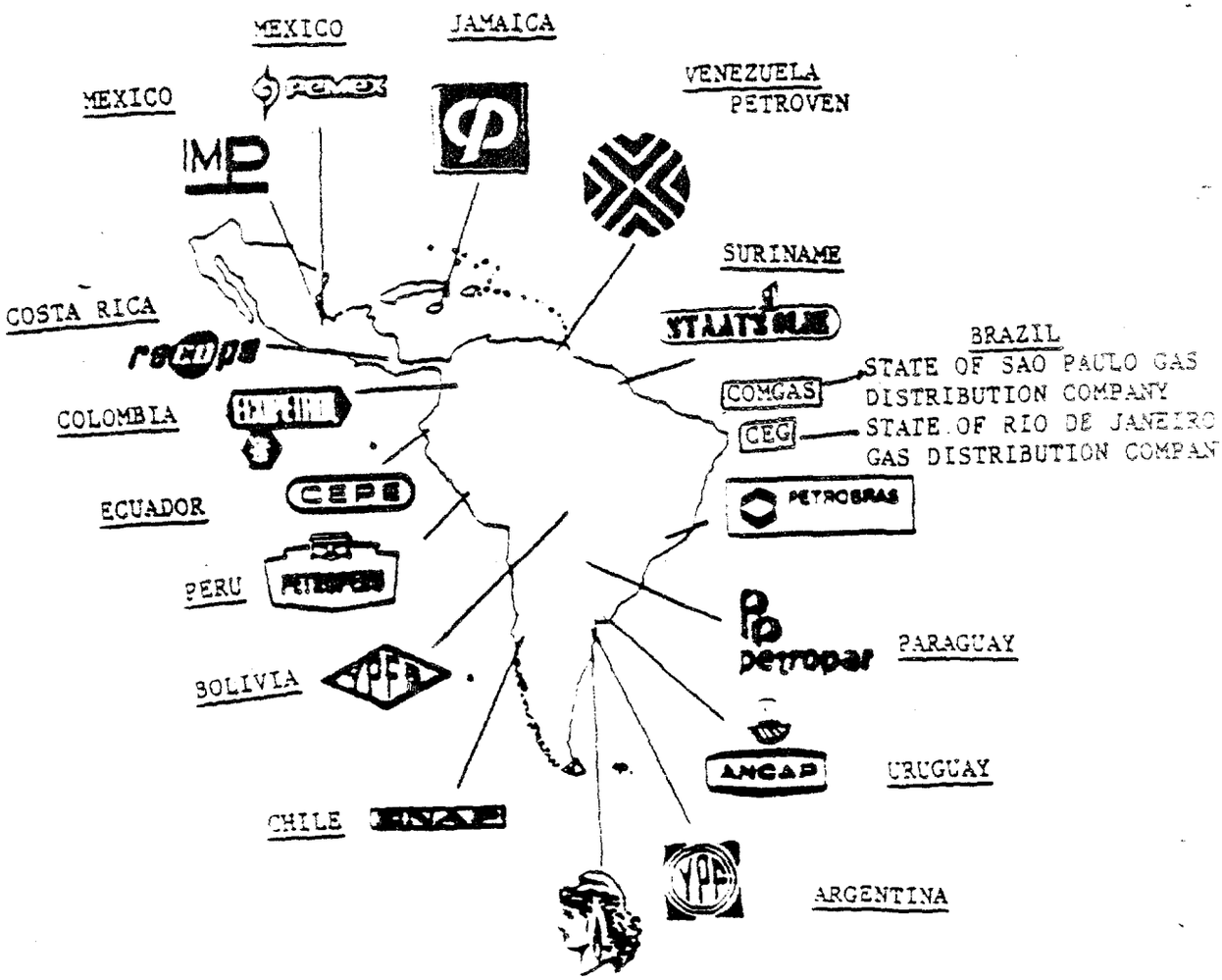

GAS DEL ESTADO

YACIMIENTOS PETROLIFEROS FISCALES (YPF)

1. YPF is a state-owned petroleum company organized under the Secretariat of Energy in the Ministry of Public Works. It is the largest enterprise in Argentina and one of the largest oil companies in Latin America. In 1983-84, YPF produced approximately 65 percent of Argentina's output of crude oil and, working together with private-sector production firms which produce oil under contract to YPF, oversaw production of most of the remaining 35 percent. Tax revenues from YPF's sales provide approximately 15 percent of the Government's total revenues. YPF is the largest single employer in the country; it has approximately 33,000 employees.

2. YPF's responsibilities are to produce sufficient crude oil and natural gas to allow Argentina to avoid energy imports, and to refine, process and market petroleum products to supply domestic demand. By these criteria, the company has been largely successful. Imports have been limited and the country has been essentially self-sufficient in production.

Organization and Management

3. YPF was established in 1922 as a Government department (a predecessor organization had begun operations in 1907). In 1977, it was separated from the Ministry of Public Works and converted to a state corporation. The main objective of the change in status of YPF was to encourage it to function more efficiently without being dependent on Government budget support.

4. The President and Vice President of the company are also members of Board of Directors; other Directors also hold operating positions in the company. The Directors are appointed by the Government for a term of three years and are eligible for reappointment without limitation.

5. YPF operates through a headquarters in Buenos Aires and several regional administrations. There are eight Departments of which two, Finance and Industrial Relations, report to an Executive Committee headed by the Vice President, and the remaining six (Research and Development, Production, Transport, Industrialization, Sales, and Commercial Operations) report to the General Manager of Operations, who is responsible directly to the President. The General Manager of Operations is, in effect, the Chief Operating Officer. YPF is being reorganized as shown in Annex.

6. The number of employees at YPF declined from 51,700 in 1976 to 34,800 in 1980 and 32,800 by end-1983. The initial part of these reductions reflects YPF's returning to private ownership a network of retail service stations. The professional staff of YPF have a reputation for dedication and competence known in the industry. During 1981 and 1982, salaries were periodically frozen, with the result that their real value deteriorated significantly. Salary adjustments made during 1983 and 1984 have corrected some of these problems.

7. According to the Law of State Corporations, YPF cannot be declared bankrupt and can only be dissolved by law. The company's annual investment and operating budget must be approved by the cabinet, and its financial statements are audited annually by the Sindicatura General de Empresas Publicas, the Government agency responsible for public corporations.

Operations

8. YPF has been able to continue physical operations with relative continuity, notwithstanding the great impact upon the company's financial situation of events since 1980. Lack of foreign exchange has impaired YPF's ability to import key parts and has required use of makeshift substitutes at the expense of certain operating efficiencies. Similarly, lack of adequate cash flow has forced the firm to cut all but essential expenditures. In response to the latter problem portions of the fuel excise taxes collected on behalf of the federal Government have on occasion been withheld by the company.

9. Exploration and development of oil and gas in Argentina is undertaken by YPF both on its own account and with the private sector on a contractual basis. Approximately 70 percent of exploration for oil and gas in Argentina and 60 percent of development drilling is done by YPF. The balance is done by private sector firms under contract to YPF.

10. The amount of new reserves added each year as a result of the combined exploration effort of YPF and the private sector has approximately equaled production, with the result that total reserves of crude have remained relatively constant. However, the reserves-to-production ratio has declined from levels over 17 years to recent levels under 14 due to inadequate investments by YPF and the private sector.

11. Annual production of natural gas by YPF has increased significantly, from 285 billion cubic feet (BCF) in 1975 to 400 BCF in 1980 and 428 BCF in 1982. Natural gas is almost entirely associated with crude oil.

12. YPF operates over 4,600 kilometers of pipelines. 1,706 km are crude oil lines and 2,951 km are petroleum product lines. The most important crude lines are from fields in Neuquen to the west connecting petrochemical installations located at Bahia Blanca south of Buenos Aires; the most important petroleum product lines extend from Campo Duran in the north to the port of San Lorenzo north of Buenos Aires.

13. YPF has a refining capacity of 23 millions Tons/year, or approximately 65 percent of Argentine's total refining capacity. The balance of refining is done by private companies, notably Esso and Shell.

14. In general, the issues confronted by YPF are:

(a) Inadequate revenues net of fuel excise taxes (or "retention income"), other taxes and royalties;
(b) Loss of its equity base;
(c) Inadequate financial management and control systems;
(d) Need for improved evaluation and ordering of investment priorities; and
(e) Difficulty in planning beyond a short-term horizon.

Investment Program

15. The bulk of YPF's investment program is allocated to exploration for and production of crude petroleum.[1/] In 1983 these amounts represented US$710 million, or 87% of total investment of US$820 million. Physical exploration and production activities by YPF (and private contractors) during 1982 and 1983 are summarized in Table 2.1 below.

Table 2.1

ARGENTINA: Exploration and Development 1982-83

	1982			1983		
	YPF	Cont's*	Total	YPF	Cont's*	Total
Exploration:						
Seismic (Line-km)			24,707			19,680
Wells (Number)	63	15	78	83	34	117
Km's Drilled	161	40	201	209	93	302
Development:						
Wells (Number)	526	210	736	475	274	749
Km's (Drilled)	986	524	1,510	908	647	1,555

* Cont's: Private Contractors

16. For YPF, like any oil company, there is flexibility in the amounts which may be spent in exploration and production in any given year. In the case of Argentina, however, a continuous flow of new investment in exploration and development drilling is necessary to prevent rapid declines in the level of crude production. Argentina's oil reservoirs are numerous (over 360 are currently in production), but they are generally of small size and short-lived. The average well produces approximately 60 barrels per day and lasts only ten years. Out of approximately 7,000 producing oil wells, 600-700 cease production every year and must be replaced just to maintain production.

1/ The investment budget includes all funds allocated for drilling. As is common industry practice, funds spent on successful wells are capitalized and depreciated; funds spent on unsuccessful wells are expensed and written off.

YPF ORGANIZATION CHART

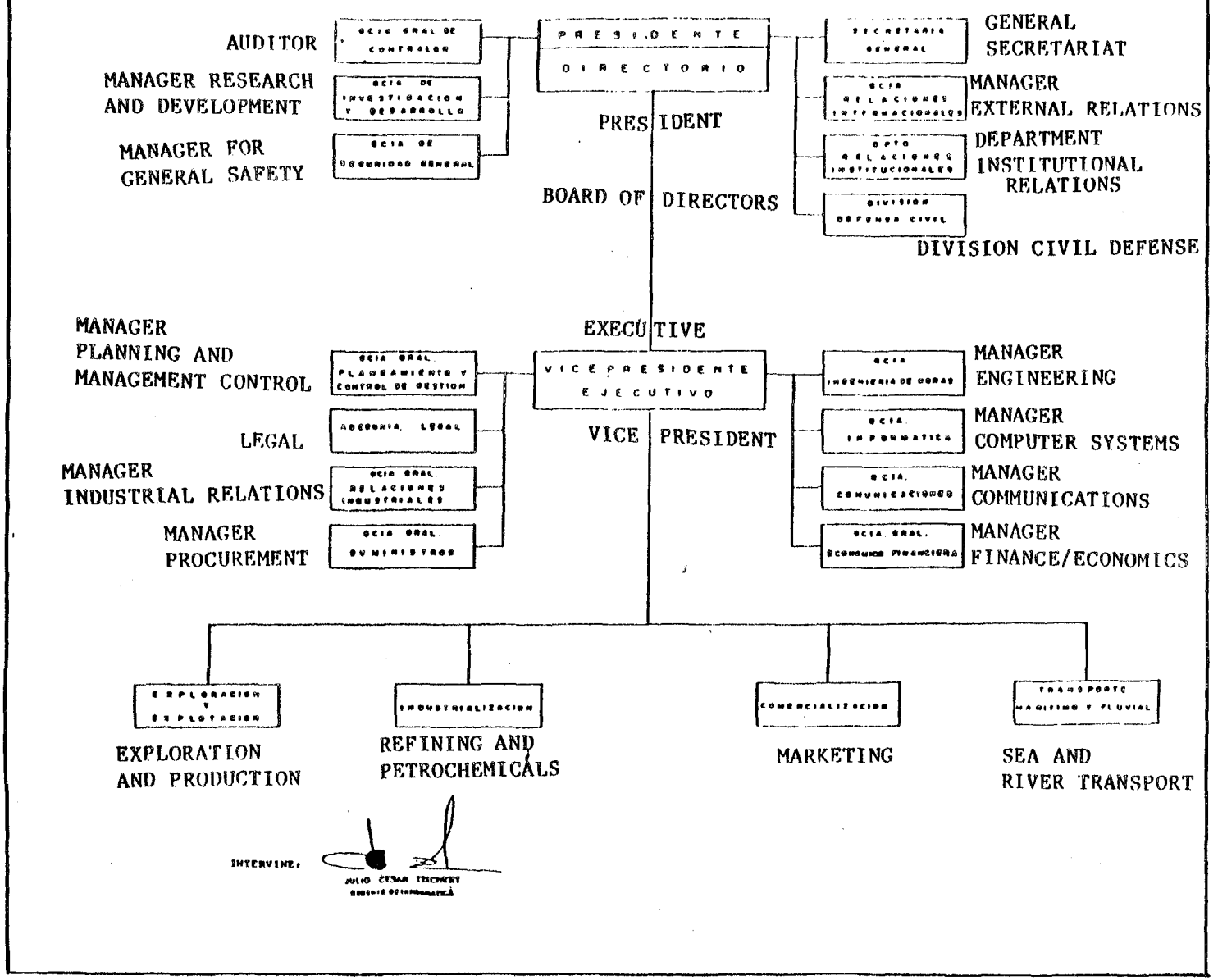

THE CORPORACION ESTATAL PETROLERA ECUATORIANA (CEPE)

Background and Scope of Activities

1. The Corporacion Estatal Petrolera Ecuatoriana (CEPE) was established by Decree No.522 of June 23, 1972. It is a state-owned corporation, which reports to the Ministry of Mines and Energy and, according to its Law and the Hydrocarbons Law, is the Government's commercial arm in all aspects of the petroleum industry including oil and gas exploration, development, transport and marketing as well as the construction and operation of refineries, petrochemical plants and related industries. It can undertake all of these activities either on its own, in joint-ventures, or through service contracts with local or foreign firms.

2. CEPE's current activities are relatively limited in exploration/production but more predominant in refining and transportation/marketing of crude and products. It currently produces about 3 millions Tons/year, from its own fields, i.e. 20%, of the country's production, and holds a 62.5% financial share of the Texaco-CEPE Consortium 1/, operated by Texaco, which produces the bulk of Ecuador's oil. CEPE is also associated with City Ecuadorian Production Co., in three filds which produce 0.2 million Tons/year. Since March 1, 1986, CEPE is the sole owner of the Transecuadorian crude pipeline (including associated storage and export terminal facilities), which continues, however, to be operatedby Texaco. CEPE also owns all of the country's gas processing plants, products pipelines and distribution terminals terminals, as well as a large proportion of the country's refining capacity

---

1/ Corresponding to Gulf's share in the original Texaco-Gulf Consortium, taken over in 1974.

CEPE has a monopoly on internal wholesale marketing 1/ of petroleum products but contracts with private firms most products transport other than by pipeline. It markets its own crude and the Government's royalty crude, as well as the refinery's surplus of refined products, in international markets.

Organization and Management

3. CEPE's charter provides for a strong Board of Directors chaired by the Minister of Mines and Energy (MME) and including the Minister of Justice, the Minister of Finance, the Minister of Industry, Commerce and Integration, the Chief of the Joint Command of the Armed Forces and the President of CONADE, or their respective delegates. CEPE's General Manager participates in Board meetings but has no vote. The Board usually meets every week and has broad powers in the management of the company, including day-to-day operations (particularly for the award of contracts and recruitment of personnel).

4. Reporting to the Board is CEPE's General Manager who oversees 3 main line operating Directorates (Gerencias): the Operations Directorate (responsible for exploration, production, refineries & related "industries", and engineering); the Marketing and Transport Directorate (responsible for Domestic & International Marketing, Transport and Storage, and the Guayaquil Branch); and the Administration/Finance Directorate (responsible for Administration, Finances, Personnel and Procurement). Also reporting to the General Manager are 2 staff Departments: the Corporate Planning Department (responsible for planning, organization and data processing) and the Coordination Unit (responsible for following up the Consortium's activities). This organization, detailed in Annex, was put in place in

---

1/ Most of the country's service stations are privately-owned and operated (although they carry the CEPE logo).

June 1986 and aims at facilitating delegation down the various levels of decision-makers (a major improvement compared to the previous organization where as many as 8 Department managers were reporting directly to the General Manager). CEPE's current general manager, an experienced manager drawn from the private sector, was named in 1985. He has brought with him a team of high-level advisers who have introduced private sector methods in order to improve CEPE's managerial efficiency.

5. Improvements in CEPE's managerial efficiency are however constrained by the company's lack of autonomy. In particular the Board still has approval authority for any expenditure above US$50,000. Procurement of most contracts is subject to a cumbersome review by several outside Government entities. Furthermore, the Directorate of Hydrocarbons (DNH), MEM's department responsible for overseeing CEPE, is duplicating many activities carried out by CEPE, with technical groups carrying out much of the same studies, statistical reporting etc., that CEPE does. The Government intends to review CEPE's charter to provide for a greater degree of corporate autonomy. However, this situation has become embedded over a long period and basic changes will thus not likely be achieved quickly. In particular, a radical change in the relationship and respective responsibilities of MEM and CEPE is not considered to be an achievable objective in the near term, given the high political sensitivity of the issue and the legal constraints involved (in fact, a draft law revising CEPE's charter has been blocked in Congress for the last two years). Such a change, however, is more likely to occur if CEPE's organization and management are improved from within, such as an improvement of CEPE's management information and financial systems making it easier for the Government to relax its rigid day-to-day control.

Staffing and Training

6. As of Dec.1985, CEPE's staff numbered 4,085, of whom 993 were professionals. Staff growth, which had been very rapid in the company's first ten years due to the commissioning of the Esmeraldas refinery and the start of exploration/production activities in the Oriente, (from 251 in 1973 to 3815 in 1982) has since subsided, with an increase of only 7% between 1982 and 1985. In an effort to improve CEPE's efficiency, recruitment hiring has in fact been frozen since the arrival of the new management team. Although salaries are lower than in the private sector, particularly for professionals, they compare favorably with other semi-autonomous public entities. Benefits include one-month annual leave, attractive medical insurance and retirement plans, education allowance for children, as well as special boni for large families, seniority, hardship posts, etc.. A new job classification system is being implemented with a view to reduce the number of grade levels (from 27 to 21) and optimize staff allocation. Salaries are adjusted every two years under collective contracts negotiated with the unions, which are numerous (32), strong, and well organized; a new contract entered into effect in July 1986. Largely due to the attractive remuneration package and the unions' strength, staff turnover is low except for higher-level managers whose appointment has been affected by political changes in the country.

7. CEPE had a training budget of US$160,000 in 1985 excluding the salaries of employees while in training, and training provided by contractors and suppliers. During that year, about 65% of all staff participated in one of 250 training activities, roughly half of which took place abroad. Training of CEPE's staff is expected to increase significantly in the next few years as a result of the terms of new exploration contracts whereby oil companies have to assign large amounts (averaging about US$ 250,000 per year per contract) to training of Ecuadorian

staff. A weakness of CEPE's training program is that it focuses primarily on technical/operational subjects, whereas CEPE's fundamental weaknesses are in the administrative/financial area.

Procurement

8. Contracts above US$50,000 equivalent are gnerally procured through competitive bidding following Government procedures, which are quite complex. Extensive bidding documents are subject first to a lengthy drafting and internal review process before being sent to the Contraloria (Auditor General) and the Procuradoria General de la Nacion (Attorney General), whose clearance can take up to several weeks or even months. Invitations to bid are then published and offers are reviewed by a bidding committee composed of representatives from MEM, the Contraloria and CEPE; the evaluation report and recommendation for award is then presented to CEPE's Board for decision. Lastly, the Contraloria, Procuradoria and the Armed Forces have to give a final clearance to the decision. These procurement procedures are clearly cumbersome and cause substantial delays. Ways to reform them for the whole public sector are being studied under the Public Sector Management Project (Loan No.1326-ECU).

ECUADOR
CEPE Organization Chart

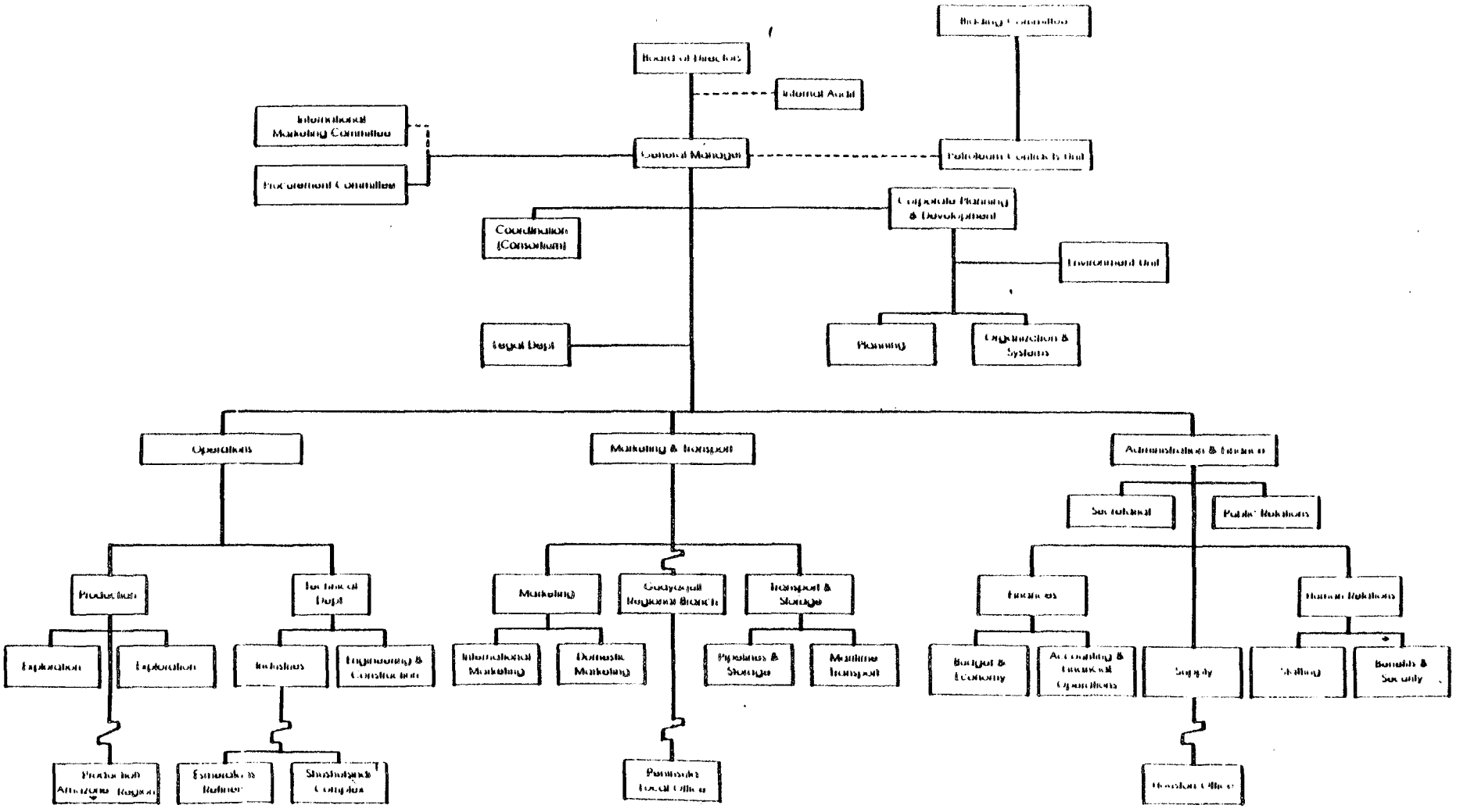

THE EMPRESA COLOMBIANA DE PETROLEOS (ECOPETROL)

Background and Scope of Activities

1. The Empresa Colombiana de Petroleos (ECOPETROL) was created in 1948 and began operations in 1951 when the De Mares concession and the Barranca Bermeja refinery reverted to the state from the Tropical Oil Company (Exxon) at the end of a 30-year concession. ECOPETROL's present statutes were published in January 1970 under Decree 062. It is a state-owned corporation, directly involved, or associated with private companies, in the exploration of some 6.8 million ha, and it has performed geological and geophysical studies over a further 20 million ha. In 1982, ECOPETROL's sales were about 5% of Colombia's GNP and the existing gasoline excise tax provided about 8% of total Government tax revenue.

2. In 1985 ECOPETROL's fields account for about 46% of Colombia's overall production; in addition, ECOPETROL has a 60% share (including a Government share of 20%) in the association contracts which account for 13% of Colombia's production. All domestic production from oil companies (under association and concession contracts) is sold to ECOPETROL as long as Colombia is a net importer. ECOPETROL controls all the country's refinery capacity of about 220,000 BD* and about 65% of the total national oil and gas transportation system, which comprises about 7,700 km of pipelines. ECOPETROL is the sole exporter of hydrocarbon products from Colombia.

3. ECOPETROL has interests in a number of companies whose principal activities range from exploitation and development of oil fields to transportation and distribution of products and petrochemicals. ECOPETROL also owns interests in coal (49% of CARBOCOL), electrical utilities and financial corporations. At present, the total amount of its subsidiary interests accounts for 12% of ECOPETROL's net worth.

Organization, Management and Staff

4. ECOPETROL is governed by a five-man board, chaired by the Minister of Mines and Energy, and appointed directly by the President of Colombia. The directors customarily are persons with experience in industry and commerce. The board meets every week and is kept well informed. The board has broad powers concerning all aspects of ECOPETROL's operation.

5. Reporting to the board is ECOPETROL's chief executive (president), who is also appointed by the President of Colombia. Assisting him are five vice presidents, responsible for exploration, production and manufacturing, engineering and projects, finance, and administration.

---

* 11 millions Tons/year.

6. As of December 31, 1983, ECOPETROL's staff numbered 8,000 of whom 2,500 were technical supervisory staff. ECOPETROL has no difficulties recruiting competent professional and support staff, largely because overall salaries and benefits paid are considered to be among the best of public enterprises in Colombia. After 10 years of service, employees enjoy free education for their children right through university, medical treatment for all family members, interest free loans, subsidized food and an excellent retirement plan. Turnover of staff is low. Around 1980, when salaries in the oil industry abroad rose rapidly, ECOPETROL lost some qualified personnel, but at the present time salaries paid by ECOPETROL are competitive. Professional salaries are adjusted annually by a general and a merit increase and are approved by the president. Non-professional staff salaries are fixed by negotiations every two years with the union, which is strong and well organized, but with which ECOPETROL's management has been able to deal effectively.

7. ECOPETROL has a yearly training budget of about US$750,000 excluding the salaries of employees while in training; it also excludes the training provided by contractors and suppliers under construction contracts and equipment purchase orders. ECOPETROL has three kinds of staff training, within ECOPETROL, within Colombia and abroad; each one of its nine operational districts designs and implements its training program under the guidance of a company-wide training coordinator who resides in Bogota, and who is also directly in charge of training of personnel assigned to the Bogota area. Training activities cover technical, financial and managerial, personnel and skilled crafts. In 1983 each employee went on average on two training assignments of all types and durations; about 230 assignments were abroad.

Budgets, Procurement, Accounts, Audits

8. General: ECOPETROL's budgeting, accounting and administration procedures are those used by the major oil companies whose concessions reverted to the state and have been modified only in the interest of standardization and to meet the needs of a state-owned company. In general, these procedures are adequate with the main weaknesses being in the arrangements for external audit. Its financial records are well kept and up-to-date, and the costing/budgeting system reasonably well maintained.

9. Budgets: ECOPETROL's planning department prepares, on an annual basis, five-year financial projections and work programs as well as each year's budget. Reports on operating investment budget performance are prepared by computer and are sent to all departments and operating units on a monthly and quarterly basis respectively. The budget is prepared in detail with explanations of the basic assumptions used. Of the 1980 to 1983 investment budgets, only 80% was carried out due to delays and optimistic budgets. However, ECOPETROL has taken adequate steps to strengthen its planning and budgeting system.

10. Delegation: In spite of board approval of the annual budget, investments over C$30 million or US$450,000 must again be approved by the board and any company indebtedness above US$500,000 must be authorized by the Government. With the board meeting at least once a week and with GOC's recognition of the importance of ECOPETROL to the economy, it appears that

there are no undue delays. Further, unforeseen capital expenditures, if sufficiently urgent, can be treated as "emergencies" and presented to the board after the fact. Adequate spending authority is delegated down to division chiefs (C$250,000 or US$5,000 in foreign exchange).

11. Procurement: ECOPETROL's procurement is generally done through bidding invitations sent to leading national and international companies (particularly those established in Colombia), and which have been prequalified and put on rosters. This is a practice inherited by ECOPETROL from the private oil companies. The procedures are well supervised and are quick and efficient.

12. Accounts: ECOPETROL's accounting system reflects the various systems used by the major foreign oil companies. Electronic data processing is widely used to monitor income and expenditures against budget. Balance sheets and income statements do not show individual "cost centers" but the income and costs from these centers can be retrieved from the computer when required, although this is not done systematically. The accounts and material coding systems are good and handled proficiently.

PETROLEOS DEL PERU (PETROPERU)

Background

1. The national oil company, Petroleos del Peru (PETROPERU), was established by Decree-Law 17753 on July 24, 1969, following nationalization, in October 1968, of the production and refining operations of IPC. At the same time, PETROPERU absorbed the production operations of the Empresa Petrolera Fiscal (EPF), a state-owned oil company with production operations in the northern Peruvian coastal region near the acreage of IPC, and assumed responsibility for management and administration of IPC's production and refining operations. In 1973, PETROPERU acquired five other small companies which had been privately owned. As a result of these acquisitions, PETROPERU now accounts for 22% of Peru's crude oil production, 100% of refinery capacity, and 98% of the marketing of petroleum products. PETROPERU was given status equivalent to a private corporation by Legislative Decree 43 of March 4, 1981. This latter action gave PETROPERU somewhat greater independence from the Government than in the past in some specific activities -- e.g., in the matter of salary levels and procurement procedures -

Nevertheless, PETROPERU is still very dependent on Government policies in the petroleum sector which affect the company significantly. Petroperu reports to the Ministry of Mines and Energy.

Operations

2. PETROPERU is the official entity for conducting all Government activities in the hydrocarbon sector, including exploration, production, refining, and marketing of all petroleum products, as well as activities related to pipeline transportation of crude oil, fertilizer production, and petrochemicals. PETROPERU, through a subsidiary, also has a small fleet of petroleum tankers used to transport crude oil and petroleum products between the Peruvian coastal ports as well as for river transport in the Peruvian Amazon region.

3. PETROPERU produced on the average 42,000 BD* in 1981. Its refining operations comprise six refineries which have an overall capacity of approximately 178,400 BD.* PETROPERU has a network of storage depots and retail outlets throughout the country. Except in the case of lubricants, PETROPERU is the sole marketer of petroleum products in the country. The other major petroleum facility owned by PETROPERU is the 856-km Trans-Andean pipeline.

Organization

4. PETROPERU is governed by a Board of Directors consisting of nine members. The Chairman of the Board is the company's highest ranking official. Three members of the Board are appointed by the Ministry of Energy and Mines, three by the Ministry of Economy, Finance and Commerce, one member represents the Armed Forces, and the remaining two members represent PETROPERU's professional and working-level employees, in accordance with Peru's industrial legislation requirements. None of the managers of the key operating departments, including the General Manager, is represented on the Board.

---

* Respectively 2 millions tons/year and 9 millions tons/year.

5. The Board has responsibility for approving all policy matters related to personnel administration, general salary increases, investment decisions, and budgets. Nevertheless, the Government's policy decisions concerning the petroleum sector (prices, taxes, etc.) have a direct impact on PETROPERU's finances which still limits the company's autonomy in an important way.

6. The Chairman of PETROPERU's Board is the company's chief executive, although he has delegated a number of responsibilities to the Vice Chairman and concentrates on policy matters. The General Manager, who reports to the Vice Chairman and works in collaboration with the key operational managers of the exploration-production, refining, and engineering departments, has responsibility for day-to-day operational matters. The authority of the General Manager is relatively limited, however, and many matters such as minor operational investment decisions are referred directly to the Board. The field offices have limited authority and routine operational matters are frequently submitted to Lima for approval. The general lack of managerial authority within PETROPERU and Government regulation of procurement, salaries, and travel contribute to the weak institutional situation of the company.

Staffing, Management and Salaries

7. The number of PETROPERU employees totals about 8,700, of which 1,800 are professionals. Approximately 1,400 of PETROPERU's staff work at the central headquarters in Lima; the bulk of its employees are located in PETROPERU's field offices, the most important of which are in Talara and Iquitos. The Talara installation employs approximately 4,200 persons and the Iquitos office approximately 900.

8. PETROPERU's senior executives are generally competent and have extensive experience in the petroleum industry in Peru. The company's middle management, however, have been weakened by the numerous technical and administrative staff over the past several years. These losses have been primarily due to salary difficulties within the company since 1976, when there was a resurgence of world petroleum activity by private companies which provided alternative sources of employment for PETROPERU's experienced operating personnel. The exploration and production department in Lima, alone, lost almost 50% of its technical staff in 1978.

9. In 1980, the Government adopted a series of measures aimed at improving the salary structure of all major public sector enterprises, including PETROPERU. In particular, such enterprises were freed from salary ceilings which had severely limited their ability to raise compensation to competitive levels. This action permitted PETROPERU to authorize a series of salary increases, accompanied by additional benefits, starting in March 1980. Professionals employed in PETROPERU had salaries comparable to those of Peruvians employed by private petroleum companies in the country and the manpower drain to the latter oil companies in Peru had almost ceased.

PETROPERU ORGANIZATION CHART

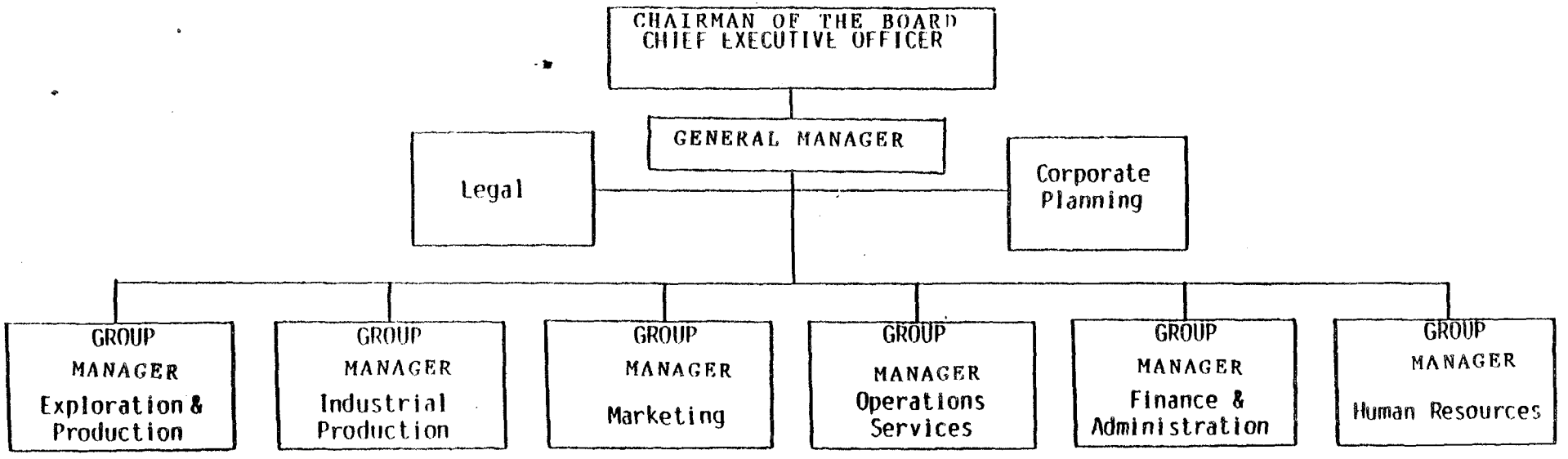

- Exploration
- Development
- Operations
- Contracts

- 10 Plants

- Domestic
- Export
- Supply & Transport

- Engineering
- Logistics

- Financial Planning & Treasury
- Accounting
- Systems & Information
- Administration

- Training
- Human Resources

YACIMIENTOS PETROLIFEROS FISCALES BOLIVIANOS (YPFB)

A. Organization and Management

Background and Scope of Activities

1. YPFB was incorporated in December 1936 as a state oil company to take over the nationalized Bolivian assets of Standard Oil of New Jersey, Inc. (now Exxon). On September 19, 1969, the Bolivian subsidiary of Gulf Oil Corporation was nationalized (Gulf was compensated) and YPFB assumed the administration of all its assets. YPFB is responsible for hydrocarbon exploration, production, transportation, pipeline construction and operation, refining and distribution as well as imports and exports. YPFB has been engaging in operations contracts with foreign oil companies. YPFB is experienced in all phases of the oil industry from exploration to drilling, production and refining. YPFB reports to the Ministry of Energy and Hydrocarbons.

2. In conjunction with the Gas Pipeline Project financed by the Bank, IDB and NYSCRF (New York State Common Retirement Fund), YPFB established in 1971 as a department the Santa Cruz Division which operates the ex-Gulf fields of Colpa, Caranda, Rio Grande, and a fully owned subsidary, YABOG, which operates the Santa Cruz-Argentina gas pipeline. In October 1985, Government decided to reorganize YPFB to (a) make its operations more efficient, (b) limit the scope for Bolivia's national oil company's activities, (c) expand the role of the private sector in both upstream and downstream operations, and (d) ultimately increase production of and revenues from petroleum.

Organization and Staffing

3. YPFB's Chairman of the Board is the President of the company. In addition, the Representative of the Ministry of Energy and Hydrocarbons, the Ministries of Planning, Finance, and Defense, YPFB's General Manager, and a delegate of YPFB's workforce are represented on the Board. All Board members, except YPFB's labor representative, are appointed by the President of Bolivia.

4. The General Manager of YPFB is the chief executive officer. Below him is an Assistant General Manager who supervises three departments: Exploration, Production (production and development in all YPFB fields except the ex-Gulf properties) and Industrial (refining and pipelines, except for the gas pipeline to Argentina). Marketing, Finance, General Services, Materials, and Contract Negotiations report directly to the General Manager of YPFB, as well as YPFB's Santa Cruz Division and YABOG.

5. As of April 30, 1985, the staff numbered about 8,299, of whom 525 were professionals, including 380 engineers and geologists. As of February 28, 1986, this had been reduced to 7,640 and the new administration is determined to further reduce staffing in YPFB. YPFB's personnel grew at an average annual rate of about 10% between 1979 and 1985, but YPFB at the same time lost many of its most experienced engineers and geologists. Several department heads have been removed in the last several years, while others have

left to work either for private oil companies in Bolivia or in neighboring countries as devaluations of the Bolivian peso eroded their salaries. In order to redress the loss of skilled technical staff, it is necessary for YPFB to maintain salaries of the experienced engineers and geologists at levels competitive with those offered for these specialists within and outside Bolivia.

Accounting, Auditing

6. YPFB's budgeting and accounting system is adequate and complies with standard industry practices. YPFB has a computerized system to monitor income and expenditures in each of its main profit and cost centers. The accounts and material coding systems are good and the accounting and materials department staff make good use of these systems. YPFB's decentralized units, YABOG and the Santa Cruz Division, maintain separate accounting and control departments. Their accounting procedures were inherited from Gulf and are efficient. YABOG and Santa Cruz Division submit monthly financial reports to YPFB's headquarters and their yearly budgets are approved by their Executive Committee which is composed of the manager of the unit, the head of YPFB Planning Department, and the YPFB General Manager.

7. YPFB's Internal Audit Unit is composed of 22 professionals and reports directly to the General Manager. A confidential plan of action is approved by the General Manager at the beginning of the year, and one or two auditing visits yearly, in accordance with the relative importance of the cost/profit centers, are scheduled. The Unit audits all departments and cost/profit centers in YPFB except the Materials Department which has its own internal auditor. YPFB's external auditing is currently done by Telleria, Ormachea & Troche, independent auditors associated with Deloitte Haskins & Sells.

YPFB Restructuring

8. The new Bolivian Government pursues the policy to reduce the role of the public sector in the economy and to increase that of private enterprises, and to make the public sector companies more efficient. With YPFB being the most important public sector company in Bolivia, the Government is reviewing its operations, investment program and scope of activities to focus YPFB more clearly and to make it more efficient. A diagnostic review of YPFB's organization with alternative models to reorganize the company was carried out by A.D. Little in November 1985 followed up by a more comprehensive study by Booz-Allen. This work is financed by UNDP with the Bank Group as Executing Agency.

YPFB ORGANIZATION CHART

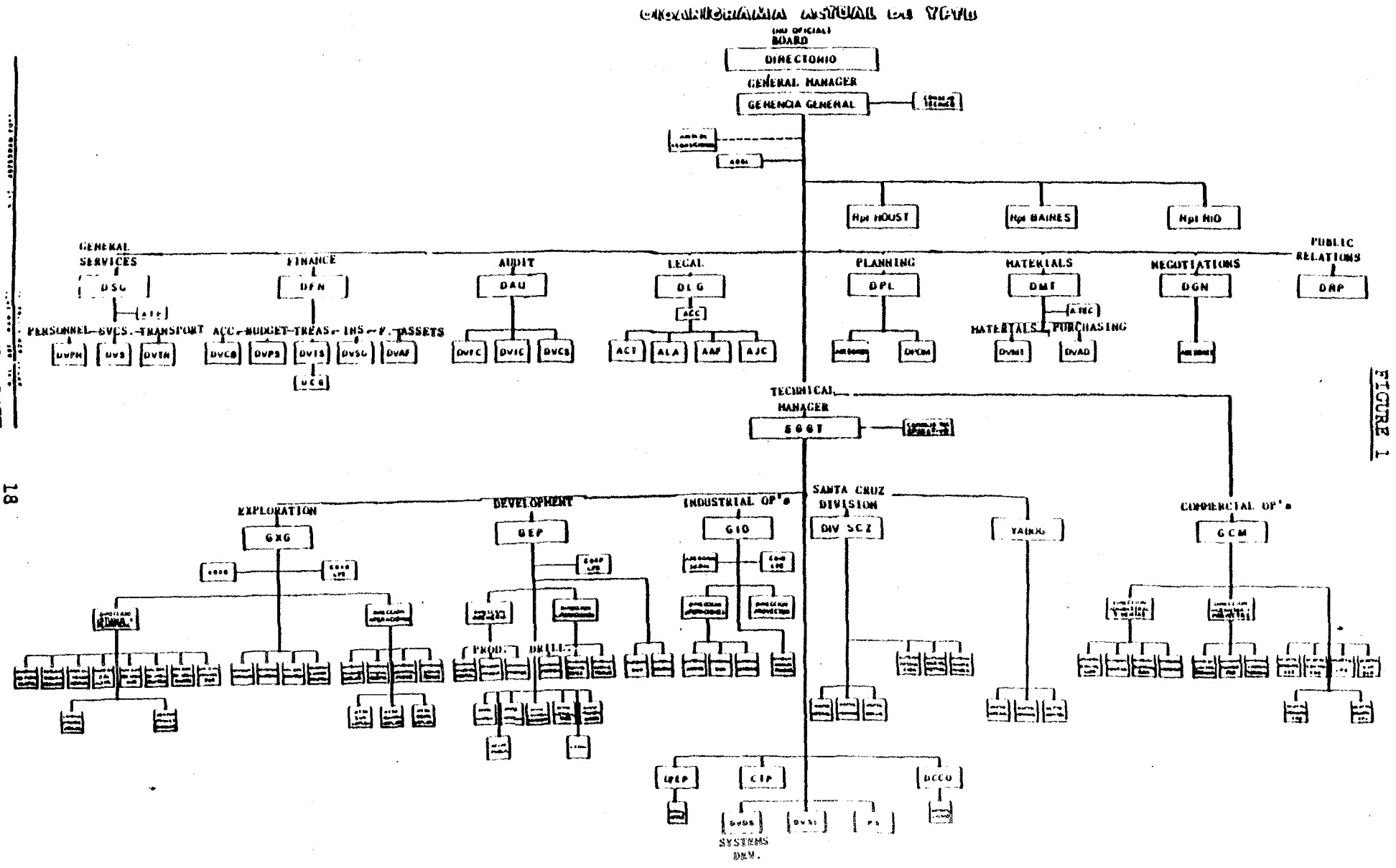

FIGURE 1

BRAZIL - PETROBRAS

Operating Institutions

1. Petrobras has responsibility for the exploration, drilling, production, refining (with the exception of two small refineries which have remained in private hands) and transportation of crude oil and gas in Brazil. Petrobras has almost single-handedly been responsible for increasing the production of crude oil in Brazil from essentially nothing at the time of its creation to 28 millions tons in 1985.

2. In 1938 all petroleum and gas reserves in Brazil were nationalized and the National Petroleum Council (CNP) was created to develop and implement national oil policy. With the creation of Petrobras in 1953[1/], the operational functions of the CNP were transferred to it. The Government of Brazil holds 75.37% of the shares of Petrobras and 83.3% of the voting shares; the balance is held privately. CNP continues to operate as a price-regulating agency under the Ministry of Mines and Energy.

3. While Petrobras has been largely responsible for oil and gas operations in Brazil, two small independent refineries which operated at the time of Petrobras' founding have remained in private hands. Some private companies also operate in the Brazilian petrochemical industry. Petrobras controls one-third of the retail marketing of oil products and gas, but other private companies participate actively in this sector. In short, while Petrobras dominates the petroleum industry, private firms are active in certain segments, and elements of potential if not actual competition apply to most petroleum operations.

4. A recent example of competition in the domestic petroleum industry is PauliPetro. PauliPetro was an agency of the Government of the State of Sao Paulo. PauliPetro's mission was to explore for hydrocarbons in the Parana basin in southcentral Brazil, near the city of Sao Paulo. PauliPetro was staffed with trained professionals and

1/ Decree-Law 2004, October 1953

experts, and embarked on an aggressive exploration program. After cumulative expenditures of approximately US$430 million and no commercial discoveries, however, PauliPetro was closed down by a new state government administration early in 1983.

5. Petrobras reports to the Ministry of Mines and Energy. This Ministry coordinates all activities in the energy sector, both operational and policy-oriented. Operating institutions reporting to this Ministry include: Electrobras in the electricity sector; Nucleobras in nuclear energy; and the Companhia Vale do Rio Doce in the mining sector. Petrobras has an Administrative Council (Annex) which plays the role of the traditional Board of Directors and a Managing Board of Directors which is responsible for day-to-day operations.

6. Policy groups reporting to the Minister of Mines and Energy include the National Petroleum Council, which is responsible for pricing policy of petroleum, coal, gas and alcohol. The Departamento Nacional de Aquas e Energia Electrica (DNAEE) controls pricing policy in the electric energy sector and the Commisao Nacional de Energia Nuclear (CNEN) regulates pricing policy in the nuclear energy sector.

7. The National Petroleum Council, or CNP, is charged with setting prices for hydrocarbon products. An independent agency, it effectively intermediates between the needs and dictates of the National Planning Secretariat (SEPLAN) and Petrobras. The CNP manages the various accounts which govern price-setting in the hydrocarbon sector. Although Petrobras is subject to CNP's directives, there is ongoing dialogue between CNP and Petrobras.

Present Status of Policy Coordination

8. A National Energy Commission (CNE) was established to coordinate planning for the various energy subsectors in Brazil after the initial increases in petroleum prices in the 1970s. This Commission is a formal group which includes the Presidency of the Republic, the Armed Forces Chiefs of Staff, representatives from the National Congress, the Secretariat of Planning, the Ministry of Finance, the Ministry of Mines and Energy, the Ministry of Industry and Commerce, the Ministry of Agriculture, the Ministry of the Interior, and the Ministry of Transportation, among others. Additional representatives such as the President of Petrobras or the head of the CNP may be invited to participate in meetings of the CNE.1/ The National Energy Commission rarely meets in full. Working groups comprising various of the members address specific issues. A full-time honorary Secretary manages the CNE on an ongoing basis.

1/ Constituted by Regulation 1,181 of August 26, 1981, the Group formally comprised representatives of the Ministry of Mines and Energy; the CNE; Petrobras, CAEEB, SEPLAN; the Ministry of Foreign Relations of the states of Rio Grande do Sul, Sante Catarina, Parana, Sao Paulo, Rio de Janeiro, Minas Gerais, and Mato Grosso do Sul; and the Brazilian Gas Association (ABG).

9. In 1982, an independent working group was established under the CNE to review development of the natural gas sector in Brazil. The group included representatives from the Ministry of Mines and Energy, Petrobras' Planning Department, the Sao Paulo State Secretariat of Industry and Commerce, and various other government, industry, and independent representatives. This effort has been organized into detailed reviews of pricing policies, supply prospects, the market for gas, and review of the implications of the use of natural gas on current refinery production.

10. The degree of centralized leadership by the federal authorities in energy planning which prevailed at the time of preparation of the first "Energy Model" in November 1979 appears, on balance, to have become somewhat more decentralized. The Ministry of Mines and Energy prepared an updated version of the Energy Model in May 1981, but the usefulness of this model has been significantly affected by changes in the price structure of crude oil and the impact of the country's debt crisis. The Ministry continues to refine and publish a useful inventory of the country's use of energy (the "Balanco Energetico") annually.

Petrobras' Role in the Hydrocarbon Sector

11. In the debate as to how best to proceed to develop Brazil's hydrocarbon resources, due consideration must be given to the many skills and experience possessed by Petrobras. The company's resources are considerable: as of January 5, 1982, it employed almost 50,000 persons. Petrobras is the largest industrial corporation in Brazil; it is one of the largest industrial corporations outside of the United States.

12. Petrobras' total investment budget for 1982 was approximately US$4.2 billion and actual investments during 1982 were close to US$4.0 billion.1/ Of these amounts, approximately 80% was committed to exploration and production. The company's 1983 budget, originally projected at US$4.3 billion, has been revised down repeatedly in 1983 as part of federal cost reduction measures. Petrobras budget was revise down from 2.8 to US$2.3 billion.

Companhia Estadual de Rio CEG

13. The Gas Company of the State of Rio de Janeiro, CEG, presently delivers 40 MMCFD to approximately 460,000 customers. Its installed pipeline system is 2,317 km. A low-pressure cast-iron pipeline network covers an urban area of 78 km^2; a high-pressure steel system, 315 km^2. These systems together cover one-third of the total area of Rio of 1,171 km^2.

14. Until recently CEG provided gas to Rio manufactured from naphtha and LPG feedstock. As natural gas from Petrobras offshore fields has become available, most of the gas supplied by CEG has been converted from naphtha to this source.

1/ US$ equivalents are approximate because continuous devaluation of the cruzeiro makes accurate calculation of currency equivalencies difficult.

PETROBRAS
PETROLEO BRASILEIRO S.A.

1985 ANNUAL REPORT

Administrative Council

Helio Beltrão – PRESIDENT
Araken de Oliveira
Armando Guedes Coelho
Carlos Sant'Anna
Joel Mendes Renno
Maximiano Fonseca
Paulo Vieira Belotti
Tancredo Augusto Tolentino Neves
Wagner Freire

Board of Directors

Helio Beltrão – PRESIDENT
Armando Guedes Coelho
Carlos Sant'Anna
Joel Mendes Renno
Maximiano Fonseca
Paulo Vieira Belotti
Wagner Freire

Departments

Commercial
Arthur de Carvalho F. Neto

Exploration
Milton Romeu Franke

Industrial
Alberto Boyadjian

Drilling
Helio Lins Marinho Falcão

Production
Sebastião Henriques Vilarinho

Transportation
Paulo de Bohosiel Dharlet Filho

Services

Public Relations
Guilherme Duque Estrada

Engineering
Solon Guimarães Filho

Finance
Orlando Galvão Filho

Legal
Celso de Albuquerque Barreto

Supplies
Luigi Dallolio

Personnel
Heitor Chagas de Oliveira

Planning
Cid Rodrigues

Data Processing
João Reynaldo Pereira da Costa

Specialized Agencies

President's Cabinet
Isaac Lopes de Castro

General Secretariat
Roberto Pinheiro da Silveira

The Leopoldo A. Miguez de Mello Research and Development Center
José Paulo Silveira

Superintendency for Exploration Contracts
Luis Antonio Nascimento Reis

Executive Service of Central Administration
Gilberto Amaro Rodrigues

PETROBRÁS GROUP

- PETROQUISA
  - PETROFLEX
  - PETROQUÍMICA UNIÃO
  - COPESUL
  - COPENE
    - COPENER
    - PESCON
    - FISIBA
    - PN DISTRIBUIDORA
    - CEMAN — NORDEQ
    - MONÔMEROS
    - TEQUIMAR — TEQUIAL
    - COMSIP
    - TEGAL
  - NITRIFLEX — NITRIFLEX AMAZÔNIA
  - ESTIRENO — CBE
  - COPERBO — ALCOOLQUÍMICA
  - POLITENO — POL. EMPREENDIMENTOS
- PETROMISA
  - SALGEMA — SALGEMA MINERAÇÃO
  - ACRINOR
    - CQR
    - CQA
    - ALCLOR
  - POLIBRASIL
  - POLIALDEN
  - CIQUINE PETROQUÍMICA — CIQUINE QUÍMICA
  - NITROCARBONO
    - PLASBATE
    - PETRONOR
  - POLIPROPILENO
  - CPC — CPC ALAGOAS
    - CPC S. PAULO
    - SANSUY
  - DETEN
  - NITROCLOR
  - OXITENO — OXITENO NORDESTE
    - OXITENO ALAGOAS
    - OXICAP
  - POLISUL
  - CINAL
  - POLIOLEFINAS — POLIDINA
    - COLORTHENE
    - PLASTINTAS
  - PPH
  - TRIUNFO
  - EDN — EDN DISTRIBUIDORA
    - POLIESTIRENO
  - FCC
  - PRONOR — POLIURETANOS
    - POLICARBONATOS
- RENAVE
  - METANOR
    - COPENOR
    - NORPAR
- BR
  - PETRASA
    - DALCÓQUIO
    - ITAIPAVA
    - CEMAPE
    - LIDERBRAS
    - PETROTEC
    - TRANSULTRA
    - CNA
    - CONSTELAÇÃO
  - BRASÁLCOOL
- FERTIFÉRTIL
  - GOIASFÉRTIL
  - ICC*
  - NITROFÉRTIL
  - ULTRAFÉRTIL
  - FOSFÉRTIL
  - ARAFÉRTIL
  - NORFÉRTIL
  - CRN
  - INDAG
- INTERBRÁS
  - INTERNOR
  - SEAGULL
  - INTERBRÁS FRANCE
  - INTERBRÁS CAYMAN
  - SOMINTER
- BRASPETRO
  - BRASOIL
  - BRASPETRO ALGERIE
  - BRASNOR
  - ESPA
- PETROCOQUE
  - PETROCOQUE NORTE

DEFINITIONS

- SUBSIDIARIES
  (In which voting capital must be maintained in excess of 51%)
- OTHER SUBSIDIARIES
  (In which voting capital is in excess of 50%)
- AFFILIATES
  (In which voting capital is between 10% and 50%)