Reducing Input Subsidies to Livestock Producers in Cyprus

An Economic Analysis

SWP782

Avishay Braverman
Jeffrey S. Hammer
Erica Jorgenson

WORLD BANK STAFF WORKING PAPERS
Number 782

WORLD BANK STAFF WORKING PAPERS
Number 782

Reducing Input Subsidies to Livestock Producers in Cyprus

An Economic Analysis

Avishay Braverman
Jeffrey S. Hammer
Erica Jorgenson

The World Bank
Washington, D.C., U.S.A.

Manufactured in the United States of America
First printing December 1985

Avishay Braverman is a senior economist and Jeffrey S. Hammer an economist in the Economics and Policy Division of the World Bank's Agriculture and Rural Development Department; Erica Jorgenson is a graduate student in economics at Harvard University.

Library of Congress Cataloging-in-Publication Data

Braverman, Avishay, 1948-
Reducing input subsidies to livestock producers in Cyprus.

(World Bank staff working papers ; no. 782)
Bibliography: p.
1. Animal industry--Cyprus--Costs. 2. Feeds--Cyprus--Costs. 3. Barley--Cyprus--Costs. 4. Agricultural subsidies--Cyprus. 5. Debts, Public--Cyprus. 6. Balance of payments--Cyprus. 7. Meat--Prices--Cyprus. 8. Farm income--Cyprus.
I. Hammer, Jeffrey S., 1953- . II. Jorgenson, Erica, 1959- . III. Title. IV. Series.
HD9426.C932B73 1985 338.1'36'0095645 85-26329
ISBN 0-8213-0672-3

ABSTRACT

This paper analyzes the impact of reducing barley subsidies to livestock producers in Cyprus on: (1) the government deficit, (2) the cost of living of different income groups, (3) foreign exchange, and (4) production and consumption of livestock products. It extends our general multi-market methodology, applied to Korea, Senegal and Sierra Leone, to include analysis of a livestock sector. The basic method is to construct a simulation model of the agricultural sector tied to the urban and external sectors through market clearing conditions. Interdependencies among markets are explicitly incorporated through substitution in supply and demand.

ACKNOWLEDGEMENTS

Many Cypriot officials and researchers, too many to mention all by name, contributed to this study through discussions and suggestions. In particular, we are most grateful to Costas Apostalides who accompanied us during our mission and provided us with most valuable support. Special thanks are also due to Sawai Boonma for his continuous support, to Angus Deaton for helpful discussions and to Alex Meeraus, Tony Brooke and Arne Drud whose modelling system, GAMS, we have used for the numerical solutions of the model. We alone, though, are responsible for any error, and for all views expressed.

TABLE OF CONTENTS

I. INTRODUCTION AND SUMMARY

I.1 Purpose

The purpose of this paper is twofold. First, it attempts to answer a number of important policy questions concerning the Grain Commission deficit in Cyprus. Second, the paper represents an extension of our general methodology designed to analyze agricultural pricing policies[1/] to include analysis of a livestock sector.

The two purposes complement each other. The Grain Commission deficits have become a significant burden on the Cypriot government finances. The deficits amounted to two percent of GNP in 1981. The need to find a way to reduce this drain on public resources has become an important policy goal. However, it is important to know what the consequences of various attempts to reduce the deficits would be. What will happen to the cost of living in the absence of subsidies? How will this affect the government wage bill given indexation of wages? Will the poor be disproportionately affected? What will happen to the value of agricultural production and imports and to farm income? The answers to these questions are critical to the immediate political economy debate in which issues of efficiency, equity, practicality and political feasibility are important. It is precisely this set of questions which the methodology used in this paper is designed to handle.

1/ This method was originally applied to Korea (Braverman, Ahn and Hammer, 1983): Subsequently, it has been applied under different institutional constraints to: Senegal (Braverman, Hammer and Levinsohn, 1983; Braverman and Hammer [forthcoming]), Sierra Leone (Braverman, Hammer and Jorgenson, 1983) and Malawi (Singh, Squire and Kirchner, 1984). For a discussion which focuses mainly on methodological aspects in the Korean context, see Braverman-Hammer-Ahn (forthcoming).

I.2 Standard Methods of Analysis

Standard methods of analysis of agricultural pricing policies employed in the Bank cannot be used to answer many of these questions. Studies of comparative advantage (using effective rates of protection (EPR) or domestic resource cost (DRC) calculations) cannot be used to answer questions of distributional impact of policies nor can they be used to determine the adjustment of quantities produced or consumed. Single market studies of producer and consumer surplus can address incidence questions (though only on the functional distribution of income--that is, between producers and consumers of products). However, they are limited in their ability to take into account important interactions between markets.

I.3 The Multi-Market Method

The multi-market method used in this paper attempts to correct the shortcomings of the above methods. A model which treats both the production structure of the agricultural sector and the demand system for its products in a consistent framework is developed. Production of each commodity is determined by profit maximization for all agricultural goods included in the model. This allows for the direct substitution of land in one field crop for another. Demand for each commodity is a function of the prices of all related commodities facing the consumer, as well as income. Drawing on the literature of the farm household model (Yotopolous and Lau, 1974; Barnum and Squire, 1980) income generated in the agricultural sector is a component of total income. This device ties the production and consumption aspects of the farm economy together in a consistent manner. The method of analysis consists of constructing this consistent set of equations which captures the basic behavior of farmers in Cyprus and solving this system for different values of the variables which can be influenced directly by policy.

The effects of a policy on any one price in the farm economy can be traced through related markets. For example, an increase in the release price of barley for feed may increase the demand for hay, reducing the supply of crops other than hay. Both wheat and barley are grown at fixed, subsidized prices and a reduction of output will relieve some of the government costs of these programs. At the same time, the increase in domestic meat costs will increase consumer prices and lead to increased imports of meats. Ruminant animals will be affected less than pork and poultry, since the former can be fed on substitute hay. Since different income groups eat different amounts of each of these varieties of meats, costs of living may rise at different rates for these groups. As is readily seen, the implications of the single policy change can be far reaching and well beyond the capabilities of single market analyses to determine.

In an attempt to make the methodology embodied in this paper easier to use, an alternative version of this model has been devised. The alternative method is related to the one presented here. The alternative version is constructed by taking derivatives of the market clearing conditions. As such, it is a model which can be solved by linear methods and can be used on personal computers. However, since it is constructed from derivatives, it is only applicable to analysis of small changes in policies. The issues regarding the comparison of the two methods are discussed in Braverman-Hammer-Gron (1985).

I.4 Cyprus Policy Questions

The immediate policy question in Cyprus is easily stated. The main component of the government cost is in the maintenance of the subsidy to barley used as feed. The Grain Commission purchases barley grain from domestic farmers (with a premium over world prices) and from abroad, and

sells to livestock producers at a significant discount. The price to the livestock industry is £33.9 per ton and has been held at this level since 1978. World prices, on the other hand, had increased to the level of £69 per ton of barley in 1982. The costs of the deficit due to feedgrain subsidies, therefore, had grown to £12.4 million in 1982. The most important set of questions, therefore, revolves around the consequences of raising the release price of barley to levels comparable to the cost of acquisition. As mentioned, these consequences include the rise in the cost of living, especially for the poor; the change in domestic production of meat and milk; changes in net imports of agricultural products, including increases in meat imports and decreases in barley imports; and changes in employment in farming.

The other policies which can be analyzed in the present framework are of somewhat less importance. These are the subsidies for barley and wheat production. One reason for their lesser importance is that they absorb a smaller proportion of the budget. Total producer subsidies (relative to world prices) accounted for £2.1 million in 1982 or 12.2 percent of the total Grain Commission deficit. The other reason that there is less interest in these policies is that they are generally believed to be a form of income maintenance for older farmers and generally untouchable for political reasons. In any case, the consequences of changing subsidy levels to grain producers is within the scope of the study and can be of use to the government in assessing the full costs and benefits of these programs.

Since the degree of subsidy in each of these markets is quite substantial, and since the political debate surrounding these policies can become heated, it is probably not feasible to remove the subsidies in one shot. Therefore, the policy interventions to be simulated will close the

gap between current prices and world prices in stages. This is intended to mimic the gradual change in prices.

I.5 Key Results

The relevant policy on the agenda of the Cypriot Government is to increase consumer feedgrain prices. This policy, if accepted, is likely to be implemented in stages. The first stage considered in this paper is an increase of 14.5 percent (from £33.9 per ton to £38.8 per ton). We consider its implications under two scenarios. The first does not allow imports of pork and poultry since Cyprus is currently self-sufficient in these goods. The second scenario allows free trade in these goods at initial prices. The implications for the deficit are:

(i) The Grain Commission deficit would decrease by 20.2 and 28.8 percent respectively for the two scenarios.

(ii) If the increase in government wage bill due to the cost of living increase is taken into account, then these changes will be 17.7 and 28.0 percent.

It was believed that these subsidies benefit mainly consumers. It is our finding that the benefit of this subsidy, and hence the burden of its removal, is shared between consumers and livestock producers. This is due to the fact that the demand for individual meats are relatively elastic and that not all meat consumer prices will change since some are determined in world markets (e.g. frozen beef and lamb, and in one scenario pork and poultry).

Clearly, in the short run, a decrease in subsidies per se is never a Pareto-Superior move, i.e., without compensation certain groups get hurt. However, as demonstrated in the text, the substantial reduction in the budget deficit does not come at a heavy cost to consumers. The pork and poultry industry may contract. The released labor is assumed to find

employment relatively easily since off farm employment opportunities are commonly observed. We provide here a methodology for capturing order of magnitudes for these tradeoffs, which incorporates substitution in production and consumption.

II: MODEL STRUCTURE

II.1 The Set of Commodities Analyzed

The formal model is presented in Appendix B. In essence, the model is a set of supply and demand equations which are linked together in a way consistent with economic theory. The supply side of the model describes the production processes for four meat products: fresh lamb and goat, beef, an aggregate commodity consisting of pork and poultry, and milk (cow's milk equivalent of cow, sheep and goat milk). It also includes the production of three field crops: barley, wheat and hay. The complete production system specifies the output relations and the set of input demands.

The demand equations are defined over six commodities: fresh lamb and goat, frozen lamb (imported), beef, pork and poultry (as one aggregated commodity), milk and bread. Hay and barley in the production system are used exclusively as intermediate inputs for animal feed.

II.2 Sector Organization

In some ways it is difficult to identify an agricultural sector in Cyprus with well defined limits. Since the country is small, actual distances between the countryside and urban centers of employment are within commuting range. As a result, many people are only part-time farmers who earn a substantial part of their income in the urban sector. Some have full-time jobs off the farm (Ansell, Bishop, and Upton, 1983). Therefore, it is difficult to identify a labor force which is specific to agriculture. Similarly, it is difficult to distinguish a characteristically rural consumption pattern from that of the rest of the economy. The population is simply too intermixed to fruitfully distinguish farmers from non-farmers. The only exception to this statement might be the vine

growing regions which are the preserves of an older, more immobile population. This region is specifically excluded from the model.

As a result of this intermixing of the population, the model treats agriculture as being well integrated into the national economy. For the purposes of demand, this integration takes the form of specifying a single demand system for the whole of Cyprus. For the supply side, this inter-twining of the sectors shows up in two ways. The labor market is modelled in such a way that the wage is determined in the larger non-agricultural sector and is taken as given by the agriculture sector. In addition, it is assumed that investment in livestock must earn a rate of return which is determined by the opportunity costs of funds in other sectors.

II.3 Production Relations

Each of the commodities is assumed to be characterized by a profit function which determines the maximum profit it is possible to attain for given prices of variable factors of production, and quantities of available fixed factors. The derivation and characteristics of this function (called a restricted profit function due to the inclusion of the fixed factors) can be found in Lau (1976). It suffices to mention here that the profit function can be used to determine a consistent set of input demand equations and output supply equations.

II.3.(i) Production in the Livestock Industries

The productive structure for each of the animal product industries has a variety of features in common. In each case, profits are defined as returns to ownership of the animal. The variable factors of production in each case are labor, capital (farm machinery), feed and an aggregate of other costs (veterinary services, etc.). Since the fixed factor here is the herd, the scope for increasing output without increasing

feed is limited. This requires that the underlying production function should allow very little substitutability between feed and other factors of production. The translog function was chosen which gives an elasticity of substitution between feed and both labor and capital of near .1.

The definition of feed costs poses another key question. An important issue in the discussion of the barley subsidies is the substitutability of hay for barley in feed for sheep and cows. Little research has been done to determine this substitution possibility within the framework of a production function. However, there is general agreement that hay can be substituted for grain at the margin. Besides direct calorie and protein content, hay has advantages in maintaining the health of animals, particularly those raised for milk production. In addition, the use of extra hay can be expected to improve the quality of milk produced, though given the marketing structure in Cyprus, the farmer would get no benefit from increasing the fat content of the milk. In any case, it appears that the two forms of feed are substitutes, but because of the health effects (subject to diminishing returns once a cow or sheep is essentially healthy), this substitution is not linear for all combinations of grain and hay. Therefore, the aggregate factor of feed is modelled as a Cobb-Douglas function of the two components. The weights in the aggregate are given by the average share of grain and hay in the total cost of feeds for the ruminant animals. Hence, we have a two-level production structure for sheep and cows, a translog profit function defined over the prices of labor, capital, other inputs and feed with a Cobb-Douglas price index of grain and hay prices used as the cost of feed.

A second special feature of the production structure concerns the milk market. While on the demand side of the model only one type of milk will be considered (cow's milk equivalent), on the production side two

types of milk are included which are aggregated only when they reach the market. The profit function for sheep's milk includes the same arguments as the one for lamb and they share the same stock of animals for calculation of the profit. The only difference is in the weight given to hay in the feed price index. Milk production requires increased hay use since the animals are raised to older ages. The same is true for cow's milk. After profit and production are determined for the two types of milk separately, sheep milk is converted into cow milk equivalent using the standard conversion of 1.8 to 1.

All of the livestock industries share the same equilibrium condition. The model is designed to be relevant for an intermediate period of time. That is, technological possibilities are assumed to be fixed (distinguishing the model from possible long-run versions) but farmers are allowed to adjust the size of their stocks of animals (distinguishing the model from very short-run or "impact" versions). It is assumed to be relevant, therefore, for the situation one year after the policy is implemented. A short-run version, in which animals slaughtered due to stock reduction are sold on the market, was also run but will be discussed only briefly in the next chapter.

The equilibrium condition for the size of the stocks is that the rate of return on the purchase of animals must remain constant. As mentioned above, the livestock sector in Cyprus is well integrated into the rest of the economy. As such, it must compete for funds with the rest of the industrial sector. Investments in livestock, therefore, must be as profitable as alternative investments. A further, important assumption of the model is that the livestock sector is "small" relative to the remainder of the industrial sector. It is small in the sense that changes in profitability in agriculture will not affect the rate of return to

investment in the economy at large. The rate of return to investment in each type of animal will be a decreasing function of the size of the herd of that animal. Therefore, if costs of production were to rise and profits fall with the removal of subsidies, the number of animals maintained will be decreased in order to keep the marginal profitability constant.

Given the data that we obtained in Cyprus, we assumed that all firms, in particular in the pork and poultry industry, are alike, and the average level of profit for the sector applies to each producer. However, conventional wisdom in Cyprus reports that the pork and poultry industry includes heterogenous producers who systematically underreport their profits. The implications for our results are that in reality the supply elasticity of pork and poultry should be lower than the one we estimated.

II.3.(ii) Production of Field Crops

The production structures of barley, wheat and hay differ from those in livestock in a variety of ways. First, the variable factors of production differ. For the field crops, these are: labor, capital and other inputs. The fixed factor is land. Second, the production function is specialized to the Cobb-Douglas form of the translog function. The reason for this is that no restriction such as the input/output relation between feed and output exists for these crops and, again, sufficient data for a complete estimation of the production structure is unavailable. The Cobb-Douglas form has the advantage of simplicity. Third, the equilibrium condition differs. Total land available for cultivation in these crops is assumed to be fixed. However, land can be shifted between these crops readily. Equilibrium in the land market requires that the marginal value product of land in each use be the same. This raises a technical problem. Since both wheat and barley prices are fixed by the government, they do not change as different combinations of output are produced. The technologies

for producing wheat and barley are quite similar. If both crops could be produced subject to constant returns to scale, the model would produce the result that only one of these crops, the more profitable one, would be produced at all. The rate of profit, on the margin, would be constant and all land would be converted to use in the crop with the higher value. In fact, something like this appears to be happening in Cyprus. Since prices were fixed at levels favoring the production of barley (the mid 70's), wheat production has experienced a steady deterioration (see Appendix A). It is quite possible that it is only because of inertia on the part of farmers that any wheat is grown at all. However, since wheat is grown in our base period, it was necessary to drop the assumption of constant returns to scale in order to generate equilibrium values of wheat production. The crops are assumed to be subject to decreasing returns to scale. The rationalization is that plots of land are heterogenous and that some are better suited for one type of crop relative to the other.

Even if the producer prices of wheat and barley are not changed in the simulations, the cropping pattern is still likely to change. If the demand for hay increases as a result of the removal of feedgrain subsidies, its price will rise as well. This will increase its profitability and induce a shift of land out of both wheat and barley into hay (much of hay is the same plant as barley but cut before the grain is allowed to form). This provides the link between the livestock sector and the cropping pattern for agriculture.

II.4 Structure of Demand

The demand side of the model also makes use of a flexible functional form designed to capture a wide variety of cross commodity substitution possibilities. The form used is the Almost Ideal Demand System (AIDS) devised by Deaton and Muellbauer (1980). The commodities

which are included in the demand system are: fresh lamb, frozen lamb, beef, milk, pork and poultry and bread.

The agriculture sector is assumed to be an integral part of the Cypriot economy and demands are not disaggregated between urban and rural sectors. The contribution of farm household income to demand is handled by including the value of agricultural profits in total disposable income. Hence, there will be a secondary effect of changes in subsidies on total demand which is due to reductions in farm profits.

The demand system was calibrated according to the procedure described in Appendix C. Econometric estimates of the demand structure were performed and compared to the analysis in Panayiotou (1982). Data for this analysis were supplied by the Agricultural Research Institute of the Ministry of Agriculture.

II.5 Market Equilibrium

The basic institutional structure of the Cypriot agricultural sector is captured through the choice of market clearing conditions. Each market clears in the following way:

Lamb: Fresh lamb is traded on private markets with little government intervention at all. Supply and demand are equated via flexibly adjusting prices. While some lamb is imported, the type which is imported (often from New Zealand) is frozen and not considered a perfect substitute for the preferred fresh meat. However, the two types are substitutable to some degree. Frozen lamb is imported at fixed world prices. No domestic production of frozen lamb is assumed to take place. The ability to import at constant prices will exert a moderating effect on the domestic price of fresh lamb as consumers switch between the two goods.

Beef: In contrast to lamb, fresh and frozen beef are assumed to be perfect substitutes and are aggregated into a single good. As a result,

the price of this good is determined on world markets. Supply and demand are determined with reference to this price. Any imbalance is corrected by imports or exports. In general, the country will always be an importer of beef.

Milk: The aggregated commodity, cow's milk equivalent, is traded on a free market and is modelled in the same way as fresh lamb.

Pork and Poultry: In recent years, Cyprus has been self-sufficient in pork and poultry products (see Appendix A). However, this has been due in part to heavily subsidized feedgrains. If these subsidies are reduced, it is possible that the domestic price of pork and poultry would rise substantially relative to international prices. If this is true, there may be pressure on the government (the Price Commission perhaps) to allow imports of these goods in order to moderate the cost to consumers. Since these political factors are hard for us to assess, it was decided to run two versions of the model to account for either possibility. In the first version, the current self-sufficiency is taken as a given, and the market is modelled in the same way as fresh lamb and milk--that is, with prices completely variable and domestic supplies meeting demand. In the second version, it is assumed that the current self-sufficiency is due only to the fact that domestic prices are approximately equal to world prices. Any deviation would result in imports or exports which would keep prices the same. Therefore, the market is modelled in the same way as beef. The comparison of the two versions has an added benefit of allowing us to assess the consequences of protecting the pork and poultry industries.

Barley: Barley in this model is an aggregate of all feedgrains. Only barley proper is grown in Cyprus for this purpose but the commodity discussed in the model includes imported sorghum and, for poultry, maize.

The government has two separate policies in place in the barley market. On the producer side, there is a fixed floor price for all sales to the government. Since this is higher than the purchase price for livestock producers, it is assumed to be binding. On the consumer side, all grain is assumed to be sold by the government at a reduced price. The gap between supply and demand which results (unless the prices happen to generate equal supplies and demands by chance) is met with imports. Imports account for the larger share of consumption. The government deficit is composed of two parts. The first, the producer subsidy, is the wedge between producer and world prices multiplied by total production. The second, the consumer subsidy, is the wedge between release and world prices multiplied by total feedgrain demand. This ignores handling cost which, in the case of Cyprus, is minor, but can be added by a simple markup on the purchase price.

Wheat: The story of the barley market is applicable in its entirety to the wheat market. The only difference is that demand for wheat products is generated by the consumer demand system (final demand) while in barley it is a derived demand from the production of livestock (intermediate demand).

Hay: Hay in this model is an aggregate of three components: (1) barley cut as green fodder--that is, before the grain has developed; (2) other varieties of green fodder; and (3) straw as a by-product of wheat and barley grain production. The first two components are the largest. Straw is converted to fodder equivalent by the price differential between the two in the base period. The price of hay is set in a free market. Supply is determined as the combination of green fodder production which responds directly to the expected price of hay and the by-product of wheat and barley production, determined by conditions in those markets as well as

by the price of hay itself. Demand is a derived demand from the livestock producers and depends on the level of output of lamb, beef and milk as well as the price of feedgrains.

III. THE RESULTS

III.1 Policy Options

The policies to be considered are very well defined. In order to reduce the deficits, there are only four possibilities: lower the producer prices of wheat and barley or raise the consumer prices of bread and feedgrains. Of these four, the one most likely to effect the overall deficit is to raise the feedgrain price. This also is likely to be the most politically palatable option and will, consequently, take up most of the analysis. For the detailed specification of all policies analyzed see the Tables below in subsection III.3.

III.2 Demonstration of Multi-Market Interaction

In order to give some intuition into the nature of the model, one policy will be used as an example and the effects on each market will be traced graphically. The policy chosen is the increase in feedgrain prices by 14.5 percent--that is, one quarter of the way towards world prices in the base period of 1979-81. The results of this policy are presented in lines A and E in Table 2 below. Discussion will be with respect to the second version of the model, where imports of pork and poultry are allowed (line E). The markets are illustrated in Figures a through g on the following pages. The effects on the markets are as follows:

Barley: The direct effect of raising the feedgrain price is, of course, felt in the barley market. Figure a shows the initial equilibrium position in this market and the effect of policy. Original feedgrain demand is OA and original domestic production is OB leaving imports of BA. The 15 percent increase in the consumer price leads directly to the decline in feed use of 26 percent to OA'. The immediate effect on the consumer component of the deficit is to reduce it from dabw to d'a'b'w, or from £4.7

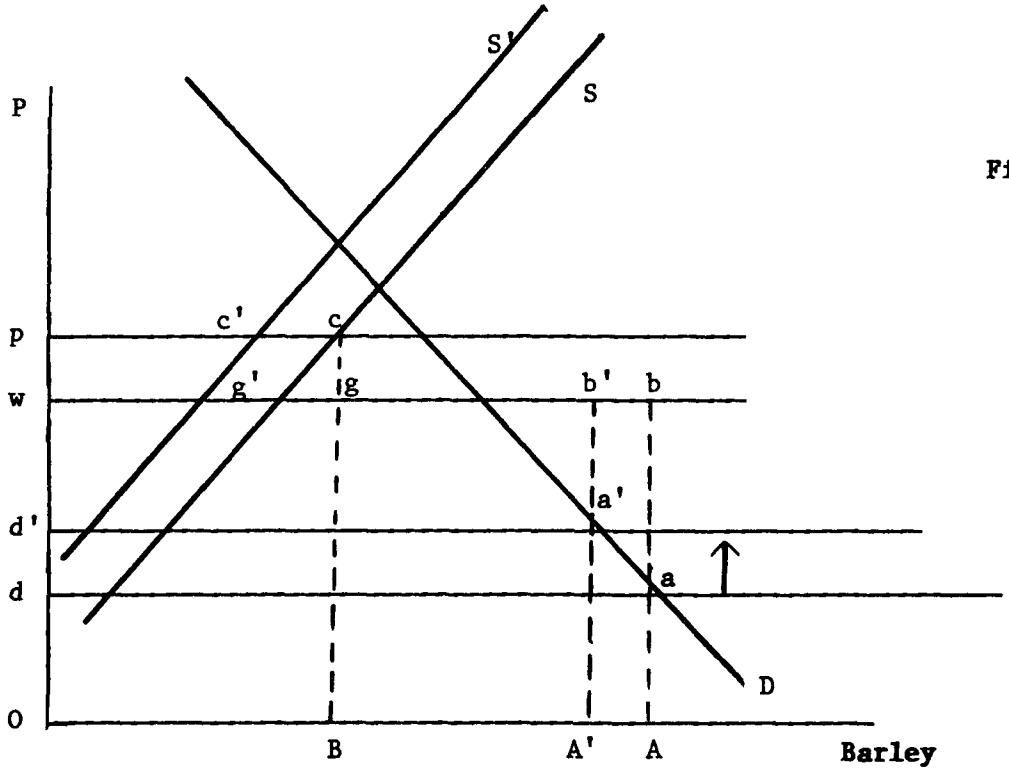

Figure a

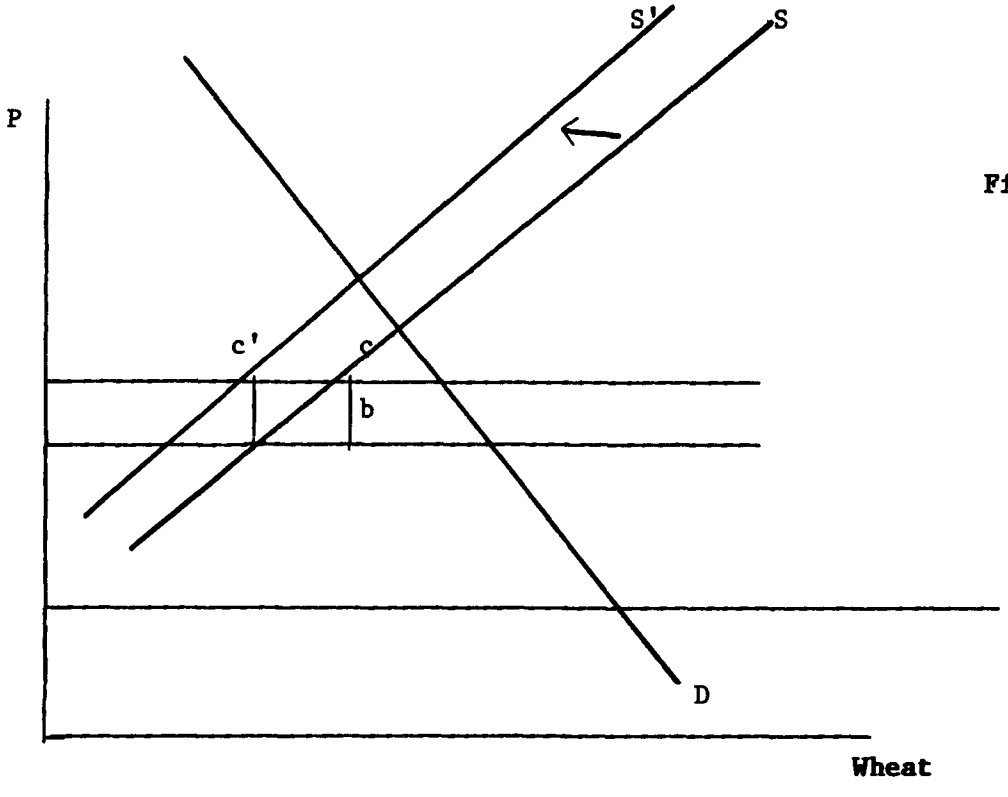

Figure b

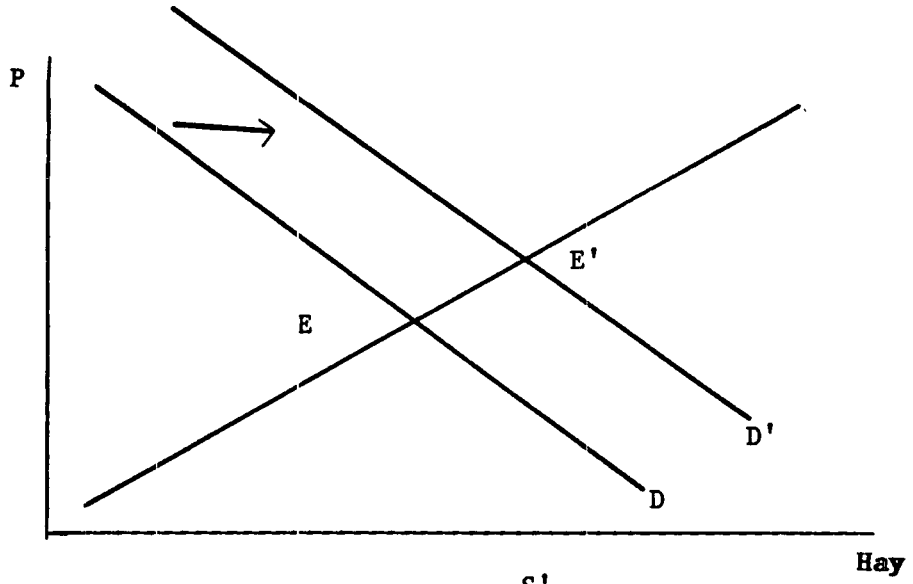

Figure c

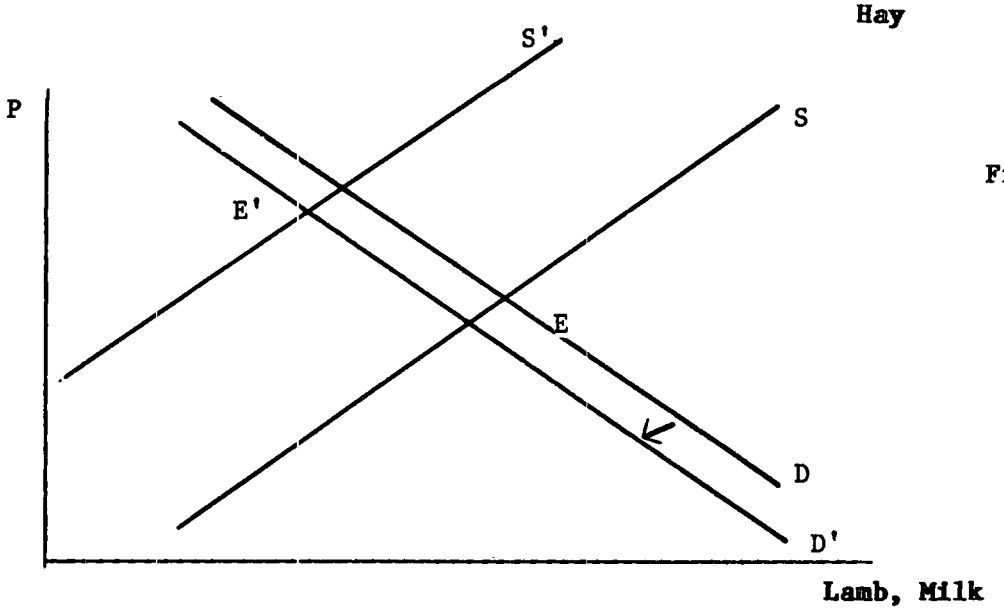

Figure d

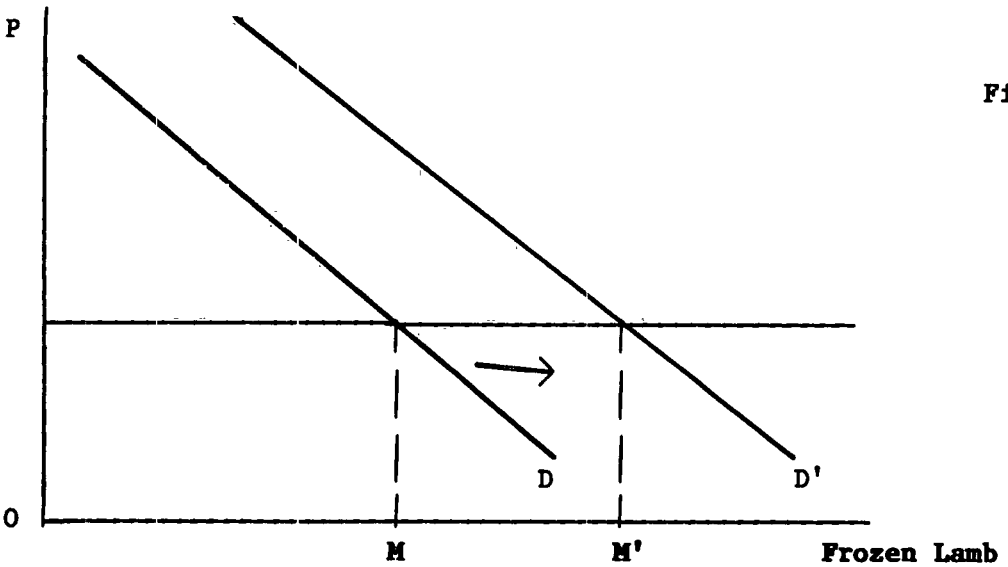

Figure e

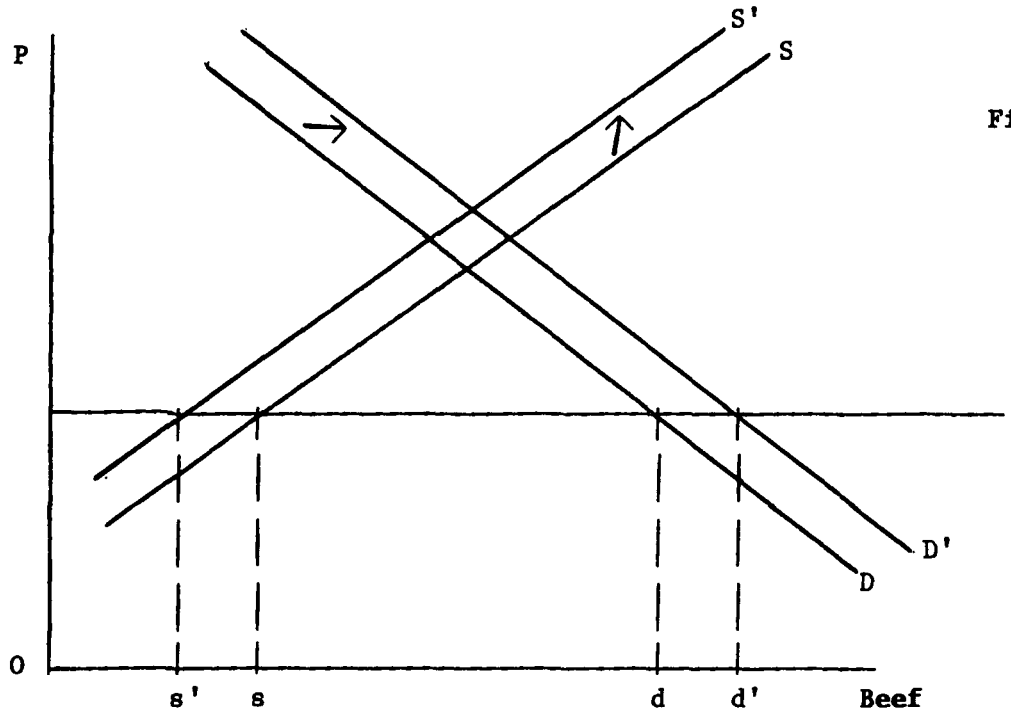

Figure f

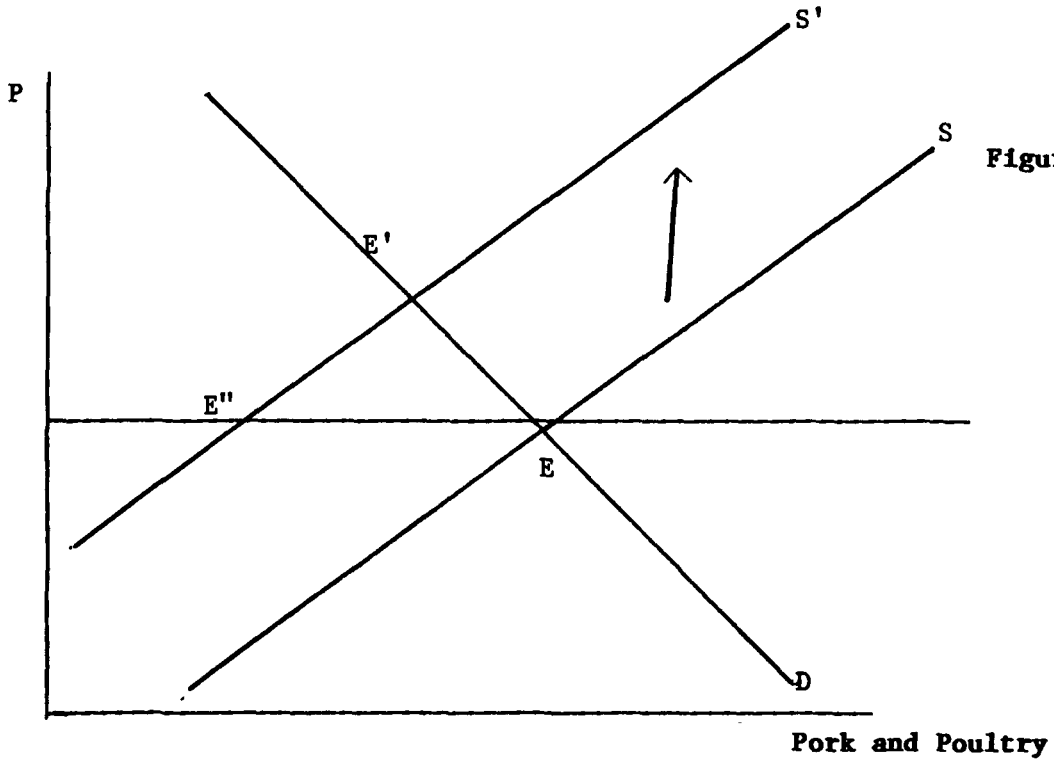

Figure g

to £2.6 million in the base period. Further effects are felt on the supply side. Since feedgrain prices are higher and its demand is reduced, the demand for hay is increased in order to compensate. This extra hay production engenders a shift in land away from barley (and wheat). This shifts the supply curve in barley such that total production falls 1.5 percent from pc to pc' at fixed producer prices. There is, therefore, a secondary effect on the deficit, reducing the producer subsidy from wgcp to wg'c'p or by £22 thousand.

Wheat: As in the case of barley, the shift of production to hay reduces the supply of wheat. The reduction is equal to cc' in Figure b, or 7.3 percent of original production. This leads to a savings in the producer subsidy of b'bcc' or £3.6 thousand.

Hay: Total demand for hay increases as illustrated in Figure c. Production of hay increases by 4.2 percent. This is due to combined (and partially offsetting) effects of increased proportion of hay in the diet of ruminant animals, reduced total production of products from these animals due to increased costs, and reduced availability of straw as by-products of wheat and barley.

Fresh Lamb: Even though a substitute feedstuff exists in hay, total cost of production of lamb will increase with the removal of the subsidy. Grain costs increase directly and hay prices will increase as well as illustrated in Figure c. The net effect is to shift the supply curve of lamb up as illustrated in Figure d. A further effect, though very small, is due to the reduction in farm profits. This reduces national income (though only very slightly) and shifts the demand curve down because of the income effect on a highly valued food. The net effect is to increase the price of lamb by 1.4 percent and reduce production and consumption by 3.7 percent.

Milk: The milk market is entirely analogous to the fresh lamb market and can also be illustrated by Figure d. The price of milk will rise by 2.6 percent and production will fall by 3 percent.

Frozen lamb: Since there is no domestic production of frozen lamb in the model and the price is set from outside the country, the "supply" of frozen lamb is perfectly elastic at a fixed price. With the increase in prices of fresh lamb and milk, the demand for imported lamb increases from OM to OM' in Figure e. Since imports are quite small, this represents an increase of 207 tons which is large relative to 900 tons in the base period.

Beef: Also imported, the domestic price of beef is not affected by the reduction in the subsidy. Market equilibrium is illustrated in Figure f. Demand for beef at constant prices is increased to Od' from Od due to higher prices in lamb and milk. At the same time, domestic production of beef becomes more expensive due to higher feedgrain prices and is reduced by 8.5 percent to Os' in the diagram. The result is an increase of 320 tons of imported beef from the original import level of 4100 tons.

Pork and Poultry: Figure g shows the outcomes of both versions of the model. In both versions, the reduction of the grain subsidy shifts the supply curve from SS to S'S'. In the version in which imports are prohibited, the equilibrium changes to E' from the original equilibrium at E. This occurs at prices which are 5.3 percent higher than in the original case with production falling by 11.9 percent. If such a price rise is considered unacceptable for a food item which is such a large part of the Cypriot diet, imports may be allowed at approximately the original prices. The new equilibrium would be at E" with production declining by 50 percent. The decline is larger in this case due to the lack of an offsetting

increase in the price of pork and poultry products which would maintain profitability of the animal stock. In general, the effect of the feedgrain price increases is larger on the supply of pork and poultry than on the other animal products. There are three basic reasons for this: (1) the share of feed in total costs of production is larger in this industry than in the others. Feed takes up 60 percent of the value of output in pork and poultry in the base period. (2) The possibility of substitution of hay for feedgrain is unavailable for this industry. Therefore, the total cost of feed goes up one for one with the removal of the subsidy while for ruminants, the cost goes up less than proportionately. (3) Cows and sheep produce the joint products meat and milk. Milk prices vary freely and rise with the reduction of the subsidy. This rise in price partially offsets the fall in profitability of the stock. Therefore, since in equilibrium the marginal product of the stock is maintained at its base level, the total adjustment for joint product animals can be less than that for pork and poultry. However, the reader should bear in mind that with an alternative high level of profits (in conformity to local conventional wisdom) the supply response would be lower than the one implied here.

Additional Factors: In addition to the consequences of policy which can be analyzed on a market-by-market basis, there are some cross market effects. First, as mentioned, each of the sources of government deficits is affected by this policy change. The net effect on the Grain Commission deficit is to reduce it by 28.8 percent from its level of $7.33 million in the base period 1979-81. Since that year, the consumer price of feed grains has been held at the same level while producer prices and world prices have increased substantially. If the behavior implied by the model were to hold in a more recent year, say 1982, with deficits calculated on the basis of the more recent prices, the effect of this

policy would be to reduce the Grain Commission deficits by 30.4 percent from a base level of 14.8 million pounds. The degree of diversion between domestic and world prices has been increasing rapidly since the base period of the model.

The Grain Commission deficit is not the only source of expense to the government. Since government wages are indexed to the cost of living, the increases in consumer prices will automatically trigger an increase in the government wage bill. The amount of this increase can be calculated by using the price index formula of the government (a Laspeyres, base quantity weighted index) on the price increases generated in the model. The two model versions differ substantially on this basis. The model which does not allow imports of pork and poultry generates higher prices for these goods. Since they represent the largest portion of the meat share in consumer's budgets, this increase has a noticeable effect on the overall cost of living. As calculated with the price index mentioned above, the cost of living would rise by .3 percent. The government wage bill rises by the same percentage, which partially offsets the gain in the Grain Commission fund. The net savings in government costs is 17.7 percent as opposed to the 20.2 percent gain calculated when excluding the wage bill effect. When imports are allowed, the price increase is more moderate, only .1 percent, and the offset in wages less important.

Besides giving a more complete picture of government costs, the effect on the cost of living is important for its own sake. It is a good measure of the costs to the consumer of changing this policy. Again, the version of the model makes a big difference. When imports are allowed, the cost to consumers of reducing subsidies is small. Without imports of pork, the costs are higher and, because these meats are larger in poor people's budgets, the costs affect the poor slightly more than the average Cypriot.

The cost of living measure which we use is a close approximation to the compensating variation implied by each policy change. With changes in prices in the range we are considering, however, there is little difference between this measure and simpler formulae such as the Laspeyres index. There is also little difference between the effects on different income groups.

The value of imports of agricultural goods can be added up across markets. Here again, the two versions give substantially different results. With no imports of pork, the reduction of subsidies saves foreign exchange. The reduction in demand for imported barley outweighs the increased imports, primarily of frozen lamb and beef. However, if pork and poultry imports are allowed, the substantial reduction in output is compensated by a large increase in imports. The value of extra meat imports is substantially larger than the savings in feed imports.

The net impact on foreign exchange of these policies is hard to assess within the model. This is due to the effect of the policies on the demand for agricultural labor, releasing workers for employment in other sectors of the economy. If the increased employment generates exportable (or import substitutable) commodities, the net effect on foreign exchange is certainly much different than simply the value of agricultural imports. (See next section for specific calculation.)

The above discussion was intended to give the flavor of the inter-dependence of the markets included in the model. Rather than discuss the remaining policy options in this much detail, only the general patterns which come out of the simulation results will be presented.

III.3 Simulation Results

The complete results of the model are presented in Tables 1 (all policies included) and 2 (phased reduction of feedgrain subsidies).

Table 1a: CYPRUS AGRICULTURAL PRICING MODEL - GENERAL RESULTS
No Imports of Pork and Poultry

Policy	Grain Commission Deficit	Change in Government Wage Bill	Total Government Cost	Cost of Living Poor	Cost of Living Average	Agricultural Labor Use	Value of Agricultural Imports
Base	£7.33m	£62m	£7.33m	1	1	18.7t man yrs.	£16.7m
Entries are percentage change from base:							
A. Feed price raised 29%	-37.5	.5	-33.3	.6	.5	-2.2	-2.4
B. Feed price raised 58% (world level)	-64.5	1.1	-55.2	1.2	1.0	-4.3	-5.2
C. Barley producer price lowered to world level	-18.3	-	-18.3	0	0	.2	11.4
D. Wheat & barley producer prices lowered to world level	-21.5	-	-21.5	0	0	.2	20.1
E. Consumer price of wheat raised to world level	-15.2	.7	-9.2	.8	.6	-	-5.9
F. All prices at world level	-100	1.7	-85.5	1.9	1.6	-3.6	9.7
G. Completely free trade (including poultry)	-100	.7	-94.0	.6	.6	-5.6	50.2

Table 1b: CYPRUS AGRICULTURAL PRICING MODEL - GENERAL RESULTS

	Deficits		Production In Thousand Metric Tons						
	Barley	Wheat	Lamb	Beef	Milk	Pork & Poultry	Hay	Barley	Wheat
Base	£6.16m	£1.18m	5.1	1.7	71.4	25.2	66.4	79.6	11.9
Entries are percentage change from base:									
A. Feed price raised 29%	-44.6	-.8	-10.1	-14.1	-4.9	-23.0	6.5	-2.4	-11.3
B. Feed price raised 58% (world level)	-76.7	-.9	-19.0	-20.8	-7.9	-42.2	10.1	-3.8	-17.3
C. Barley producer price lowered to world level	-24.4	12.9	.1	-.3	-	-	.8	-99	316
D. Wheat & barley producer prices lowered to world level	-24.8	4.8	.8	-1.4	.1	-	3.5	-98.3	83.2
E. Consumer price of wheat raised to world level	-	-95.8	.3	.1	.3	.2	.3	-.1	-.4
F. All prices at world level	-100	-100	-17	.9	-7.8	-42.0	14.9	-98.4	38.2
G. Completely free trade (including poultry)	-100	-100	-12.0	-25.7	-8.8	-100	17.8	-98.4	27.5

Table 1c: CYPRUS AGRICULTURAL PRICING MODEL - GENERAL RESULTS

	Imports in Thousand Metric Tons				Prices, £/metric ton		
	Barley	Wheat	Beef	Lamb	Frozen Lamb	Milk	Pork & Poultry
Base	156.1	55.4	4.1	.9	1583	163	731
Entries are percentage change from base:							
A. Feed price raised 29%	-23.2	2.6	17.3	101.1	2.7	4.9	10.9
B. Feed price raised 58% (world level)	-44.2	4.1	30.0	200.0	5.3	9.4	23.0
C. Barley producer price lowered to world level	50.3	-67.9	-	-1.1	-	-.1	-
D. Wheat & barley producer prices lowered to world level	49.0	-17.9	-	-5.7	-.4	-.4	-
E. Consumer price of wheat raised to world level	.4	-30.9	-	.7	-	-	-
F. All prices at world level	3.7	-39.0	30.0	203.0	4.8	8.9	23.0
G. Completely free trade (including poultry)	-39.2	-37.0	22.8	77.4	5.0	8.6	-

Table 2a: PHASED REDUCTIONS IN FEEDGRAIN SUBSIDIES

olicy ase	Grain Commission Deficit £7.33m	Change in Government Wage Bill £62m	Total Government Cost £7.33m	Total Cost 1982* 14.8	Cost of Living Poor 1	Cost of Living Average 1	Agricultural Labor use 18.7t man yrs.	Value of Agricultural Imports £16.7m
ith No Imports of Pork & Poultry								
. Feed Price Raised 14.5%	-20.2	.3	-17.7	-15.1	.4	.3	-1.2	-.9
. Feed price raised 29%	-37.5	.5	-33.3	-28.2	.6	.5	-2.2	-2.4
. Feed price raised 43.5%	-52.3	.8	-45.5	-39.1	.8	.7	-3.3	-3.8
. Feed price raised 58%	-64.5	1.1	-55.2	-48.0	1.2	1.0	-4.3	-5.2
ith Imports of Pork & Poultry								
. Feed price raised 14.5%	-28.8	.1	-28.0	-29.5	.1	.1	-2.9	20.9
. Feed price raised 29%	-45.8	.2	-44.1	-46.0	.2	.2	-4.5	30.7
. Feed price raised 43.5%	-59.5	.3	-57.0	-55.7	.3	.3	-5.6	38.9
. Feed price raised 58%	-68.8	.3	-66.0	-61.9	.3	.3	-6.3	40.4

At 1982 levels of world and support prices

Table 2b: PHASED REDUCTIONS IN FEEDGRAIN SUBSIDIES

	Deficits		Production In Thousand Metric Tons						
	Barley £6.16m	Wheat £1.18m	Lamb 5.1	Beef 1.7	Milk 71.4	Pork & Poultry 25.2	Hay 66.4	Barley 79.6	Wheat 11.9
With No Imports of Pork & Poultry									
A. Feed Price Raised 14.5%	-24.0	-.7	-5.2	-7.6	-2.7	-11.9	3.7	-1.3	-6.4
B. Feed price raised 29%	-44.6	-.8	-10.1	-14.1	-4.9	-23.0	6.5	-2.4	-11.3
C. Feed price raised 43.5%	-62.1	-.9	-14.7	-18.0	-6.6	-33.1	8.6	-3.2	-14.8
D. Feed price raised 58%	-76.7	-.9	-19.0	-20.8	-7.9	-42.2	10.1	-3.8	-17.3
With Imports of Pork & Poultry									
E. Feed price raised 14.5%	-34.2	-.8	-3.7	-8.5	-3.0	-50.4	4.2	-1.5	-7.3
F. Feed price raised 29%	-54.3	-1.1	-7.2	-15.4	-5.4	-75.7	7.7	-2.8	-13.3
G. Feed price raised 43.5%	-70.7	-1.3	-10.4	-20.3	-7.4	-100	10.5	-3.9	-18.0
H. Feed price raised 58%	-81.7	-1.0	-13.3	-24.9	-10.3	-100	12.8	-4.9	-21.9

Table 2c: PHASED REDUCTIONS IN FEEDGRAIN SUBSIDIES

	Imports In Thousand Metric Tons				Prices £/metric ton		
	Barley 156.1	Wheat 55.4	Beef 4.1	Frozen Lamb .9	Lamb 1583	Milk 163	Pork & Poultry 731
With No Imports of Pork & Poultry							
A. Feed Price Raised 14.5%	-11.7	1.5	9.5	54.6	1.4	2.7	5.3
B. Feed price raised 29%	-23.2	2.6	17.3	101.1	2.7	4.9	10.9
C. Feed price raised 43.5%	-34.1	3.5	24.0	159.9	4.0	7.3	16.8
D. Feed price raised 58%	-44.2	4.1	30.0	200.0	5.3	9.4	23.0
With Imports of Pork & Poultry							
E. Feed price raised 14.5%	-38.6	1.6	7.8	23.0	1.4	2.6	-
F. Feed price raised 29%	-61.0	2.8	13.7	44.3	2.8	5.0	-
G. Feed price raised 43.5%	-81.8	3.8	18.6	64.6	4.2	7.2	-
H. Feed price raised 58%	-86.4	4.6	22.4	83.8	5.5	9.1	-

The main features of these results are as follows:

Feedgrain price increases.

(1) While deficits can obviously be reduced with the removal of the subsidies, the savings in government revenue comes with one of two costs attached. Which cost is borne is a function of which policy is taken with respect to imports of pork and poultry. If imports are not allowed, the main costs of the subsidy reduction are the increase in the cost of living and the reduction in agricultural production, income and employment. With a 60 percent increase in the feedgrain price, the cost of living for the poor will increase by 1.2 percent, for the average Cypriot by 1 percent. Production of all agricultural products except for hay will decline. Hay increases to substitute for the more expensive feedgrains.

(2) If imports are allowed, the rise in the cost of living is much reduced. The increase is now .3 percent for everyone. The burden of this policy change is felt in larger declines in agricultural production and, most strikingly, in the increase in the agricultural import bill. The cost of living rise is kept small by much larger reliance on imported pork and poultry. The results show a substantial decline, to negligible levels, of the pork and poultry industry. Cyprus imports either the input (barley) or the output (pork and poultry). Again, this particular conclusion has to be qualified in light of the possibility of lower supply elasticity due to higher than reported profits.

(3) While agricultural imports can be expected to rise, the net impact on the national balance of payments is hard to assess. The reduction of the agricultural sector releases both labor and investment funds for other uses. These other uses can either be in export industries, import competing industries or non-traded goods industries. Either of the former two categories will help offset the loss of foreign exchange due to

agricultural imports. As an example, if barley prices were to rise by 60 percent, the agricultural labor demand would fall by 6.3 percent, or, by 1200 man-years. If employed in other sectors, generating the average amount of export earnings per non-agricultural worker, these people would contribute about £3.25 million or about half of the loss in foreign exchange due to imports. This does not include possible savings in import competing goods.

(4) Contrary to beliefs commonly expressed in Cyprus, the current controlled prices are not simply an indirect form of consumer subsidies. When the prices are allowed to rise, the cost of living does increase to some extent. However, the impact on agricultural production and profits is substantial. The benefits of the current policy are shared between producer and consumer. Due to the generally high elasticities of demand for meats in Cyprus and the opportunity to obtain the goods whose cost structures increase on world markets, it appears that the consumer subsidy component of the current price regime is not as large as that part going to producers.

Wheat and barley price supports.

(5) For a variety of reasons relating to income maintenance of the aged in the rural areas, the producer price supports are not easy to remove. However, one general pattern is evident in the simulations. The price of barley appears to have increased greatly relative to both its own price on world markets and relative to wheat support prices. When both wheat and barley producer prices are reduced to their respective world price levels (row D, Table 1), we see a substantial drop in barley production as expected. However, even though wheat prices fall, there is a net increase in wheat production. This is due to its profitability relative to barley at least for the years in the base period. This would

indicate that while the average level of support for the field crops may have to be maintained, some consideration might be given to the relative prices of wheat and barley in an attempt to follow world price trends a little more closely.

III.4 Sensitivity Analysis

A great deal of information is necessary for the construction of a model with this degree of complexity. The information underlying the model is of varying reliability. It is important to test the sensitivity of the results of the simulations to make sure that they are not dependent on questionable aspects of the supporting data.

The most difficult aspect of the data to obtain relates to the structure of consumer demand. While own price elasticities are often fairly reliable, it is often very difficult to obtain good estimates of cross price elasticities. This is true of all empirical studies of demand and is not unique to the Cypriot case. It is important to make sure that conclusions of the model are not dependent on this particularly difficult-to-obtain piece of information.

Two variations of the original model are constructed. In one, the cross price elasticities are assumed to be approximately twice the original values. In the other, the cross price elasticities are assumed to be zero. This range of values is quite wide and includes a large variation in the assumed behavior of consumers. The assumption maintained throughout is that the relative sizes of the cross price effects are correctly captured in the originally estimated version though the absolute size may vary substantially.

The results of the sensitivity analysis are presented in Table 3. Only the policy of increasing the price of barley to one-quarter of the distance to the world price is included since this is sufficient to

Table 3: SENSITIVITY ANALYSIS
Policy: Feed price raised 14.5%, Imports of Pork and Poultry Allowed
(Row E, Table 2)

	Grain Commission Deficit	Change in Government Wage Bill	Agricultural Labor Use	Value of Agricultural Imports	Imports			
					Barley	Wheat	Beef	Frozen Lamb
Base →	£7.33m	£62m	18.7t man yrs.	£16.7m	156.1	55.4	4.1	.9
Low elasticities	-28.8	.1	-3.1	20.4	-38.6	1.5	4.2	0
Base elasticities	-28.8	.1	-2.9	20.9	-38.6	1.6	7.8	23.0
High elasticities	-28.6	.1	-2.5	22.1	38.0	1.7	11.2	38.6

	Production							Prices	
	Lamb	Beef	Milk	Pork & Poultry	Hay	Barley	Wheat	Lamb	Milk
Base →	5.1	1.7	71.4	25.2	66.4	79.6	11.9	1583	163
Low elasticities	-4.2	-8.4	-3.2	-50.5	3.9	-1.4	-6.9	1.4	2.6
Base elasticities	-3.7	-8.5	-3.0	-50.4	4.2	-1.5	-7.3	1.4	2.6
High elasticities	-3.2	-8.6	-2.8	-50.5	4.5	-1.7	-8.1	1.4	2.6

It is evident that the results are quite robust to changes in the demand structure of the model. The only real difference between the three versions is in the implicit import demands. Since the base level imports of beef and frozen lamb were so low, even modest changes translate into larger percentage changes. Overall, we can say that the more substitution between crops that is incorporated in the model, the larger the import bill when the price of barley is raised to the farmers. The essential reason is that the increased price of lamb and milk lead to larger increases in demand for the imported, substitutable commodities. It should be noted, however, that even with the very large changes assumed for the demand system, the changes in results are modest.

IV. CONCLUSIONS

The above discussion indicated that the deficit can be reduced significantly at a cost of either increased imports of agricultural commodities or a small rise in the cost of living. The relevant policy on the agenda of the Cypriot Government is to increase consumer feedgrain prices. This policy, if accepted, is likely to be implemented in stages. The first stage considered in this paper is an increase of 14.5 percent (from £33.9 per ton to £38.8 per ton). We consider its implications under two scenarios. The first does not allow imports of pork and poultry since Cyprus is currently self-sufficient in these goods. The second scenario allows free trade in these goods at initial prices. The implications for the deficit are:

(i) The Grain Commission Deficit would decrease by 20.2 and 28.8 percent respectively for the two scenarios.

(ii) If the increase in government wage bill due to the cost of living increase is taken into account, then these changes will be 17.7 and 28.0 percent.

It was believed that these subsidies benefit mainly consumers. It is our finding that the benefit of this subsidy, and hence the burden of its removal, is shared between consumers and livestock producers. This is due to the fact that the demand for individual meats are relatively elastic and that not all meat consumer prices will change since some are determined in world markets (e.g. frozen beef and lamb, and in one scenario pork and poultry).

The costs of this price increase are the following:

(i) The cost of living of the poorest group will increase by .4 or .1 percent, contingent on the two scenarios of pork and poultry

(ii) The cost of living of the average Cypriot will increase by .3 or .1 percent respectively.

(iii) The value of agricultural imports will decrease or increase contingent upon the trade assumption of the pork and poultry sector. With imports allowed, the amount of foreign exchange spent on agricultural products rises by almost 21 percent (or £3.5 million). However, if imports of pork and poultry are not allowed then foreign exchange expenditure on agricultural product falls by 1 percent.

(iv) These numbers overstate the foreign exchange cost of the reduction in the Grain Commission deficit for the case of allowing imports of pork and poultry. The feedgrain price increase will release 2.9 percent of the agricultural labor force, approximately 540 man years. These people, if employed in alternative uses outside of agriculture may generate foreign exchange savings through export earnings or import substitution. Even if we ignore the import substitution component, assuming that each released worker generates the average export earnings of non-agricultural workers, this gain in foreign exchange amounts to £1.5 million. This is a substantial offset to the £3.5 million loss described in (iii).

(v) With this relatively small increase in feedgrain prices, the production of the pork and poultry industry declines by 12 and 50 percent under the two scenarios. Again, the actual supply response may be lower due to the higher than reported profits of this industry, which imply lower supply response.

As currently experienced by many other countries, a decrease in subsidies is never a Pareto-superior move; i.e., without compensation, individuals get hurt in the short-run. In the Cypriot case, the increase in the burden on consumers is not very large while the pork and poultry industry will experience declining profits and may contract. Our aim in introducing this methodology is to provide a consistent and quantitative structure for a more informed political debate. As stated above, this methodology has been further simplified for common usage by operational economists. (See Braverman-Hammer-Gron [1985].)

APPENDIX A

Basic Production Data

Table 1: PRODUCTION IN 1000 mt (1974 - 1982)

	Wheat	Barley	Pork	Poultry	Beef	Sheep, Lamb, Goats & Kids	Milk in cow milk equivalent
1974	95.0	110.0	14.7	8.0	2.0	6.9	93.7
1975	32.0	50.0	12.2	7.1	1.4	3.6	58.7
1976	34.0	55.0	13.6	7.6	1.6	4.1	66.3
1977	23.0	56.0	14.2	7.8	1.6	4.6	73.0
1978	20.0	67.0	15.2	8.4	1.8	5.8	81.3
1979	13.0	63.0	15.6	10.0	1.8	5.5	86.1
1980	13.0	80.0	15.3	10.0	2.0	5.3	92.3
1982	10.5	75.0	19.5	10.3	2.0	5.4	97.4

Table 2: IMPORTS IN 1000 mt (1974 - 1980)

	Wheat1/	Barley	Frozen Lamb	Beef
1974	5.6	92.0	0.7	0.8
1975	22.7	127.1	1.0	1.2
1976	22.8	103.1	0.9	2.5
1977	47.5	112.1	1.2	2.1
1978	29.2	95.4	1.2	2.2
1979	56.8	122.6	1.4	2.4
1980	58.9	61.5	1.4	2.7
1981	51.5	-	1.2	2.9

1/ Wheat imports are by crop year, e.g., 1974 is 1974/75.

Table 3: GRAIN COMMISSION PRICES
(£/mt)

	Barley			Wheat		
	Import	Local Purchase	Sale	Import	Local Purchase	Sale
1974/75	59.4	48.8	33.9	-	52.8	52.4
1975/76	41.8	48.8	33.9	65.0	52.8	52.4
1976/77	57.4	48.8	33.9	59.8	52.8	52.4
1977/78	37.9	62.6	33.9	46.3	56.7	50.4
1978/79	38.1	58.3	33.9	32.8	58.3	49.9
1979/80	61.4	74.8	33.9	39.3	68.5	49.9
1980/81	75.1	84.2	33.9	76.9	70.9	49.9
1981/82	69.2	91.0	33.9	79.3	81.0	49.9

Table 4: ACREAGE PLANTED IN 1000 DONUMS
(1974 - 1981)

	Wheat	Barley
1974	650	550
1975	200	220
1976	215	245
1977	205	250
1978	120	250
1979	85	260
1980	72	290
1981	65	300

Table 5: WORLD PRICES
(£/mt)

	Wheat	Barley	Frozen Lamb	Beef
1974/75	-	59.4	521.8	774.1
1975/76	65.0	41.8	438.5	517.6
1976/77	59.8	57.4	482.9	506.7
1977/78	46.3	37.9	540.0	592.8
1979/79	32.8	38.1	570.4	653.8
1979/80	39.3	61.4	693.0	889.6
1980/81	76.9	75.1	760.5	1030.5
1981/82	79.3	69.2	-	-

Table 6: GRAIN COMMISSION DEFICITS
(in million £)

	Deficit from Trade (purchase-sales)	Other Expenses and subsidies	Total Deficit from All Activities
1974/75	3.214	3.168	6.382
1975/76	2.451	1.297	3.748
1976/77	4.120	1.615	5.735
1977/78	1.685	1.446	3.131
1979/79	2.391	1.579	3.970
1979/80	7.735	2.327	10.062
1980/81	13.790	3.627	17.417
1981/82	14.339	4.361	18.700

Table 7: CONSUMPTION
(in 1000 mt)

	Beef	Goats	Pigs	Poultry and Turkey	Milk Products (all in cow milk equivalent)
1974	2.9	7.6	14.7	8.4	122.6
1975	2.6	4.6	12.2	7.5	84.4
1976	4.1	5.0	13.6	7.6	93.7
1977	3.7	5.9	14.2	7.8	100.3
1978	4.1	7.0	15.2	8.4	102.6
1979	4.2	6.9	15.4	9.9	108.7
1980	4.7	6.7	15.6	10.0	112.3

SOURCES FOR TABLES IN APPENDIX A

Cyprus: Trends and Issues in Public Finance, Country Programs Department II, The World Bank, March 1984.

Household Consumption Expenditure Survey, 1980/1981, Department of Statistics and Research, Ministry of Finance, Cyprus.

Grain Commission Annual Budget Reports, Cyprus, 1978/79, 1979/80, 1980/81, 1981/82.

Time Series Data on Livestock, 1960 - 1980, Agricultural Research Institute, Ministry of Agriculture and Natural Resources, Nicosia, Cyprus.

APPENDIX B

The Formal Model

I. PRODUCTION

A. Profit Functions

Production relations are characterized by a translog restricted (constrained by the presence of fixed factors), normalized (by the price of output; hence, profits are measured in units of output) profit function. For a detailed discussion, see Lau (1976, 1978).

1. For livestock, the profit function takes the form:

$$\ln \pi^a = \alpha^a + \Sigma\alpha_i^a \ln w_i^a + \frac{1}{2} \sum_i \sum_j \gamma_{ij}^a \ln w_i^a \ln w_j^a + \beta^a \ln C^a$$

where:

a	=	L lamb
	=	B beef
	=	K pork and poultry
i,j	=	l labor
	=	o other imports
	=	f feed
	=	k capital
π^a	=	profits generated in the production of a
w_i	=	normalized price of input i = (price of input i) divided by (price of good a)

$$w_{feed} = \theta_a^{-\theta_a} (1 - \theta_a)^{\theta_a - 1} w_h^{\theta_a} w_b^{(1 - \theta_a)}$$

h = hay; b = barley
Hence, the price of feed is a weighted average of the prices of its components.
For pork and poultry, $\theta = 0$.

C^a = Stock of animal a

2. Profit function for milk production:

$$\ln \pi^a = \alpha^a + \Sigma\alpha_i^a \ln w_i^a + \frac{1}{2} \sum_i \sum_j \gamma_{ij}^a \ln w_i^a \ln w_j^a + \beta^a \ln C^a$$

where:

a	=	CM	cow's milk
	=	SM	sheep's milk

The stock variable, C^a, is equal to the stock of the corresponding animal raised for meat. For example $C^{beef} = C^{cow's\ milk}$

3. For field crops, the profit function is specialized to a Cobb-Douglas form of the translog function:

$$\ln \pi^a = \alpha^a + \Sigma\alpha_i^a \ln w_i^a + \beta^a \ln A^a$$

where:

a	=	t	wheat
	=	b	barley
	=	h	hay
i,j	=	l	labor
	=	o	other inputs
	=	k	capital

All other symbols are as above except

A^a = land allocated to crop a

B. Supply Functions

$$Q^a = \pi^a(1 - \Sigma\alpha_i^a - \sum_i \sum_j \gamma_{ij}^a \ln w_i^a)$$

Q^a = supply of good a
for a = L, B, K, t, b, CM, SM

NOTE: for wheat and barley, all γ_{ij}'s equal zero

For hay:

$$Q^h = \pi^h(1 - \Sigma\alpha_i^h) + \sum_a \phi^a Q^a$$

for a = barley, wheat

ϕ^a = conversion factor for straw (by-product of wheat and barley) to fodder equivalent.

For total milk production in cow's milk equivalent:

$$Q^{MK} = Q^{CM} + 1.83\ Q^{SM}$$

C. Factor Demand Functions

$$X_i^a = \frac{-\partial\pi^a}{\partial w_i^a} = \frac{-\pi^a}{w_i^a}\left(\alpha_i^a + \sum_j \gamma_{ij}^a \ln w_j\right)$$

X_i^a = Demand for factor i in the production of a

$X_i = \sum_a X_i^a$ = Market demand for factor i

$$X_h^a = \frac{\theta_h^a\ w_f\ X_f^a}{w_h} \quad \text{(hay)}$$

$$X_b^a = \frac{(1 - \theta_h^a)\ w_f\ X_f^a}{w_b} \quad \text{(barley)}$$

D. Allocation of Fixed Factors

1. For livestock, the rate of return to investment in animal stock, i.e., its marginal value product, is assumed exogenous and equal to the value of the marginal product of stock in the base period.

$$\frac{\beta^k\ P^k\ \pi^k}{C^k} = \frac{\bar{B}^k\ \bar{p}^k\ \bar{\pi}^k}{\bar{C}^k} \quad \text{(Pork and Poultry)}$$

$$\frac{\beta^B\ P^B\ \pi^B + \beta^{CM}\ P^{CM}\ \pi^{CM}}{C^B} = \frac{\bar{\beta}^B\ \bar{P}^B\ \bar{\pi}^B + \bar{\beta}^{CM}\ \bar{p}^{CM}\ \bar{\pi}^{CM}}{\bar{C}^B} \quad \text{Cows}$$

$$\frac{\beta^L\ P^L\ \pi^L + \beta^{SM}\ P^{CM}\ \pi^{SM}\psi}{C^L} = \frac{\bar{\beta}^L\ \bar{P}^L\ \bar{\pi}^L + \bar{\beta}^{SM}\ \bar{p}^{CM}\ \bar{\pi}^{SM}\psi}{\bar{C}^L} \quad \text{Sheep}$$

where p^a = producer price of good a
and a bar indicates the value of the variable in the base period.

2. For field crops, land is allocated between crops such that marginal value products of land are equated.

$$\frac{\beta^h \; p^h \; \pi^h}{A^h} = \frac{\beta^b \; p^b \; \pi^b}{A^b} = \frac{\beta^t \; p^t \; \pi^t}{A^t}$$

II. CONSUMPTION

A. Definition of Income

$$Y = \sum_a p^a \; \pi^a + \Omega$$

Y = National Income

Ω = Income for all sources other than profits from agricultural production.

B. Demand Functions

$$D^a = (M^a + n^a \ln (\frac{Y}{N\rho}) + \sum_z g_{az} \ln p_d) \frac{Y}{p_d^a}$$

$$\ln\rho = M_o + \sum_a m^a \ln p_d^a + \frac{1}{2} \sum_a \sum_z g_{az} \ln p_d^a \; p_d^z$$

where:

a,z	=	L fresh lamb
	=	FL frozen lamb
	=	B beef
	=	P pork and poultry
	=	Mk milk
	=	t bread

D^a = Market demand for commodity a

N = Population size

$p_d^{a,z}$ = Consumer price of good a or z

ρ = Price index

III. MARKET CLEARING CONDITIONS

A. For fresh lamb, milk, and, in version 1, pork and poultry:

$$D^a = Q^a \qquad a = L, MK, P$$

B. For hay:

$$Q^h \equiv X_n = \sum_a X_h^a \qquad a = L, B, MK$$

C. For barley:

$$X_b \equiv \sum_a X_b^a = Q^b + M^b \qquad a = L, B, MK, P$$

D. For frozen lamb:

$$D^{FL} = M^{FL}$$

E. For beef, bread and, in version 2, pork and poultry:

$$D^a = Q^a = M^a \qquad a = B, t, P$$

$$M^z = \text{Imports of good } z \qquad z = B, t, P, b, FL$$

IV. GOVERNMENT DEFICITS

$$\text{Wheat Deficit} = \underbrace{(P^t - P_w^t)\, Q^t}_{\text{Producer Subsidy}} + \underbrace{(P_w^t - P_d^t)\, D^t}_{\text{Consumer Subsidy}}$$

$$\text{Barley Deficits} = \underbrace{(P^b - P_w^b)}_{\text{Producer Subsidy}} + \underbrace{(P_w^b - W_b)\, X_b}_{\text{Consumer Subsidy}}$$

where P_w^a = world price of good a

APPENDIX C

Method of Model Calibration

As is evident from the model presented in Appendix B, the number of parameters which must be determined is quite large. This section briefly describes the procedures used in choosing values for these parameters.

The parameter values must satisfy a variety of conditions. First, they must generate values of the main economic variables consistent with observed levels in the base period. Second, they must imply behavior consistent with empirical evidence on supply or demand responses. Third, they must satisfy restrictions imposed both by theory and by the chosen functional forms (translog and AIDS) for the production and consumption systems. These restrictions include concavity of associated cost and expenditure functions and other characteristics of "well behaved" production and utility functions. Fourth, all of the equilibrium conditions required in the model must hold for the chosen base period.

The general method used to determine the parameter values is the following (a more complete description can be found in Braverman, Ahn and Hammer, 1983). A non-linear optimization problem is defined in which deviations from known or estimated values of the parameters or functions of the parameters (such as price elasticities) are minimized. This minimization takes place subject to all the restrictions mentioned in the preceding paragraph. The general form of the problem is:

Minimize $\Sigma\ ((x_i - \bar{x}_i)/\bar{x}_i)^2$ subject to:

(1) all equations of the formal model are satisfied; and

(2) all theoretical constraints on the production and consumptions systems are satisfied.

The $\bar{x}$'s are values which the variables in question are supposed to take on if there were no other constraints on the system. For instance, these will usually include the actual values of the important variables in the base period such as actual production levels, imports or prices. They will also include behavioral characteristics of the supply and demand systems. For example, the income elasticity of beef may be known (from econometric estimates or from expert opinion) to be .7. This would be the value of $\bar{x}$ in the respective term in the summation, and parameters of the demand system would be chosen such that the expression:

$$1 + \frac{\beta_{beef}}{\text{share of income spent on beef}}$$

is as close to .7 as possible without violating any of the other restrictions of the model.

The restrictions are of two kinds. First, all the equations in Appendix B must hold exactly for the base period. Since the model is not an exact representation of reality, the equations are not likely to hold exactly at observed levels of all of the variables. The values must be modified to fit into our assumed framework.

Second, the supply and demand systems must satisfy a few restrictions imposed by theory. The best example is that the Slutsky matrix of the demand system must be negative definite. This requires that the matrix defined in terms of the parameters of the model:

$$S_{ij} = (\gamma_{ij} + \beta_i \beta_j \ln \frac{Y}{\rho N} - W_i \ \delta_{ij} + W_i W_j) \frac{Y}{P_i P_j}$$

(W_i is share of income spent on good i, δ_{ij} is the Kronecher delta where $\delta_{ij} = 1$, if $i = j$ and $= 0$ otherwise)

must be negative definite, or equivalently, that the principal minors of this matrix alternate in sign. This restriction was imposed on the minimization problem.

The choice of target values for the x's came from a variety of sources.

Demand

On the demand side, the structure of consumer preferences was determined by econometric evidence in data also provided by the Agricutural Research Institute. Their econometric work provided results reported in Panayiotou (1982). Using their data and econometric procedures as well as estimation procedures required by the AIDs functional form resulted in the parameters used in our formal calibration model. The following is the actual demand price elasticities used in the model.

	With respect to price of					
Elasticity of demand for	Fresh lamb	Frozen lamb	Beef	Milk	Pork & Poultry	Bread
Fresh lamb	-2.8	.99	1.1	.24	-.31	.01
Frozen lamb	6.9	-3.7	5.1	1.6	3.8	.01
Beef	1.7	1.1	-3.7	.09	.34	.01
Milk	.14	.12	.04	-1.2	.04	.01
Pork & Poultry	-.1	.22	.1	.03	-2.4	.01
Bread	.01	0	.01	.01	.01	-.9

Production

For the parameters in the production function, most of the information came from the farm budget studies conducted by the Agricultural Research Institute. This information determined the levels opf profit and the use of each factor in each production activity.

The main parameter which is unknown from budget data is the value of β which determines the returns to scale of the production process in all of the livestock industries. For the estimation of this parameter, the following model was chosen. Using data provided in the Time Series Data on Livestock 1960-1980 the following model relating the output of meat production, q, with animal stock was estimated:

$$q = ak^{\beta} + b\ \Delta k$$

where ak^{β} is the long-run relation of stock to meat production and Δk is the change in stock from one year to the next. If desired stocks of animals are changed, this should directly affect the amount of meat provided to the market in years intervening between price changes and the ultimate stock adjustment. The coefficient on the stock change should be proportional to the ratio of stock population to usable meat weight. These equations were estimated with an iterative procedure to obtain the values of the parameters a, β and b. This procedure gave the values of β for the minimization procedure described above. For the three commodities included in this study, the values of β in the above equation were estimated to be:

$$\beta_{lamb} - .913$$

$$\beta_{beef} - .897$$

$$\beta_{pork\ and\ poultry} - .721$$

REFERENCES

Ansell, David Clare Bishop and Martin Upton, "The Role of Part Time Farming in the Economic Development of Cyprus" [1983]. University of Reading. Discussion Paper.

Barnum, Howard and Lyn Squire, A Model of an Agricultural Household: Theory and Evidence, [1979]. World Bank Staff Occasional Paper No. 27, Johns Hopkins.

Braverman, Avishay, Choong Yong Ahn and Jeffrey S. Hammer, "Alternative Agricultural Pricing Policies in Korea: Their Implications for Government Deficits, Income Distribution, and Balance of Payments" [1983], World Bank Staff Working Paper No. 621.

_____ and Jeffrey S. Hammer, "Multi-Market Analysis of Agricultural Pricing Policies in Senegal," in Singh, I., L. Squire and J. Strauss (eds.): Agricultural Household Models: Extensions, Application and Policy (forthcoming).

_____, _____ and James Levinsohn, "Agricultural Pricing Policies in Senegal: Their Implications for Government Budget, Foreign Exchange and Regional Income Distribution," [1983], The World Bank, Country Policy Department, Draft, September

_____, _____ and Erika Jorgensen, "Agricultural Taxation and Trade Policies in Sierra Leone" [1983]. The World Bank, Country Policy Department, Draft, December.

_____, _____ and Choong Yong Ahn, "Multi-Market Analysis of Agricultural Pricing Policies in Korea," forthcoming in Modern Tax Theory for Developing Countries, David Newbery and Nicholas Stern (eds.).

_____, _____ and Anne Gron, "Multi-Market Analysis in an Operational Context: The Case of Cyprus," [1985]. The World Bank, Agriculture and Rural Development Department, Economics & Policy Division Paper.

Deaton, Angus and John Muellbauer, "An Almost Ideal Demand System," [1980]. American Economic Review, June.

Lau, Lawrence, "A Characterization of the Normalized Restricted Profit Function," [1976]. Journal of Economic Theory, February.

_____, "Applications of Profit Functions," in Fuss, M. and D. McFadden Production Economics: A Dual Approach to Theory and Applications, [1978). Amsterdam, North-Holland.

Panayiotou, George S. "Demand and Price Analysis of Livestock Products in Cyprus," [1982], Agricultural Research Institute, Ministry of Agriculture, Cyprus, October.

Singh, Inderjit, Lyn Squire and James Kirchner, "Agricultural Pricing and Marketing Policies in Malawi: A Multi-market Analysis," [1984], World Bank mimeo, May.

Yotopoulos, Pan A., and Lawrence J. Lau, "On Modelling the Agricultural Sector in Developing Countries: An Integrated Approach of Micro and Macroeconomics," [1974]. Journal of Development Economics, Vol. 1.

PUB HG3881.5 .W57 W67 no.782
Braverman, Avishay, 1948-
Reducing input subsidies to
livestock producers in
Cyprus : an economic

The World Bank

Headquarters
1818 H Street, N.W.
Washington, D.C. 20433, U.S.A.

Telephone: (202) 477-1234
Telex: WUI 64145 WORLDBANK
RCA 248423 WORLDBK
Cable Address: INTBAFRAD
WASHINGTONDC

European Office
66, avenue d'Iéna
75116 Paris, France

Telephone: (1) 723-54.21
Telex: 842-620628

Tokyo Office
Kokusai Building
1-1 Marunouchi 3-chome
Chiyoda-ku, Tokyo 100, Japan

Telephone: (03) 214-5001
Telex: 781-26838

Paper Number 782

Reducing Input Subsidies to Livestock Producers in Cyprus

The World Bank

ISSN 0253-2115/ISBN 0-8213-0672-3