Document of

The World Bank

FOR OFFICIAL USE ONLY

LN 3144-IN
CR 2076-IN

Report No. 8056-IN

STAFF APPRAISAL REPORT

INDIA

PUNJAB IRRIGATION AND DRAINAGE PROJECT

NOVEMBER 19, 1989

Agriculture Operations Division
Country Department IV
Asia Regional Office

CURRENCY EQUIVALENTS

US$ 1 = Rs 16.4

FISCAL YEAR

GOI, State: April 1 - March 31

WEIGHTS AND MEASURES

The metric system is used throughout the report

ACRONYMS AND ABBREVIATIONS

BBMB	-	Bakhra Beas Management Board
CE	-	Chief Engineer
Kharif	-	Summer, rainy season
NABARD	-	National Bank for Agricultural Refinance and Development
O&M	-	Operation and Maintenance
PIMTI	-	Punjab Irrigation Management Training Institute
Rabi	-	Winter, dry season
SOE	-	Statement of Expenditure
SYL	-	Sutlej-Yamuna link Canal

The project is based on the findings of an IBRD/IDA appraisal mission which visited India in June, 1989. The mission consisted of Messrs. C.J.Perry (Task Manager), B. Albinson, and Ms T.N. Estoque (Bank), and Messrs. W. Barber, R.K. Sabherwal, and S.G. Naryanamurthy (consultants).

INDIA

PUNJAB IRRIGATION AND DRAINAGE PROJECT

STAFF APPRAISAL REPORT

Table of Contents

INDIA

PUNJAB IRRIGATION AND DRAINAGE PROJECT

STAFF APPRAISAL REPORT

I. LOAN/CREDIT AND PROJECT SUMMARY

Borrower:	India, Acting by its President
Executing Agency:	Irrigation and Power Department, Government of Punjab
Loan and Credit Amounts:	IBRD: Loan US$ 15 million equivalent IDA: Credit SDR 117.7 million (US$ 150 million equivalent)
Terms:	IBRD: 20 years including 5 year grace period at the Bank's standard variable interest rate. IDA: Standard with 35 year maturity
Project Description:	The Project would follow the successful Punjab Irrigation Project (Credit 889-IN) which supported investments in canal and watercourse lining. These investments, which were well executed and economically sound, would be continued and expanded to include facilities (communications and canal regulation structures) designed to allow improved system operation. Development of the Kandi area, which is the poorest region in the state would be supported. The proposed project would also support investments and planning in drainage, which is an increasingly serious environmental and economic threat to large areas of northwest India. Institutional facilities would be provided to support the recent reorganization of the Irrigation Department into functionally specialized departments.
Benefits and Risks:	Increased irrigation efficiency would benefit some 60,000 farm families, particularly those at the tail ends of watercourses. Development of new water resources in the Kandi area would benefit a further 35,000 farm families in the poorest and most backward part of the state. The major risk would be the ability of the Government of Punjab to fund project investments in parallel with heavy competing demands for resources in other sectors. Technical risks, on the basis of prior experience in the State, and the very progressive farming sector, would be minimal.

Estimated Project Cost and Financing:

Component	Local	Foreign	Total
	- - - (US$ million) - - -		
System Modernization			
Watercourse Lining	31.6	1.7	33.3
Canal Modernization	43.7	2.4	46.1
Canal Regulation	10.3	0.6	10.9
Communications	4.4	0.4	4.8
Future Development	19.4	1.3	21.2
	109.9	**6.4**	**116.3**
Kandi Area Development			
Kandi Canal	24.2	1.2	25.4
Kandi Low Dams	16.1	0.8	16.8
Tubewells	12.1	0.9	13.1
	52.4	**2.9**	**55.3**
Drainage			
Surface Drainage	21.8	1.1	22.9
Sub-surface Drainage	5.5	0.2	5.7
	27.3	**1.3**	**28.6**
Institutional Development			
Studies	1.8	1.5	3.3
Training	3.4	0.3	3.7
	5.2	**1.8**	**7.0**
Total Baseline Costs	**194.8**	**12.4**	**207.2**
Physical Contingencies	14.6	0.8	15.3
Price Contingencies	21.7	2.3	24.0
TOTAL PROJECT COST[a]	**231.1**	**15.4**	**246.5**

Financing Plan:

	Local	Foreign	Total
	- - - - (US$ million) - - - - -		
GOI/State of Punjab	81.5	-	81.5
IBRD/IDA	149.6	15.4	165.0
Total	231.1	15.4	246.5

Estimated Disbursements:
(US$ million)

	IDA/Bank FY								
	1990	1991	1992	1993	1994	1995	1996	1997	1998
Annual	12	7	18	21	25	23	23	31	5
Cumulative	12	19	37	58	83	106	129	160	165

Economic rate of return: 25%

Maps: IBRD 21800-21802

[a]Including taxes and duties of US$4.8 million

II. THE AGRICULTURAL SECTOR

Agriculture in the National Economy

2.1 India has a land area of 3.27 million km^2 of which 49% is cultivable and about 16% irrigated. The population of about 810 M is growing at an annual rate of 2.2%. GDP grew at little more than 3% per annum in the 1950's and 1960's, but has averaged 4.5% since 1980. Per capita GNP reached US$300 in 1987. Average per capita income has increased, but there has been limited progress in the living standards of the urban and rural poor - some 280 M people with annual incomes below the poverty line, 80% of them living in rural areas. Agriculture contributes about 35% of GNP, and is the largest single sector in the national economy. It engages 65% of the total labor force and accounts for 25% of India's merchandise exports.

Development Priorities

2.2 Development plans of the Government of India (GOI) and state governments give priority to alleviating poverty and creating employment, especially in rural areas. The primary determinant of rural incomes, especially for the poor, is the performance of the agricultural sector. Since independence, GOI development plans have emphasized agriculture and sought to raise foodgrain production by increasing the use of fertilizers, plant protection chemicals, and improved seed varieties. In support of these objectives, GOI has strengthened the institutions supporting the sector - in agricultural extension and research, seed production, and agricultural credit - and accelerated the development of irrigation. As a result of these efforts, the annual growth rate in foodgrain production over the last 15-20 years has averaged 2.7%, slightly above the population growth.

2.3 Up to 1964/65, the irrigated area increased at a rate of only about 2% per year, of which approximately two-thirds was from surface water resources and one-third from groundwater. Since then, the rate of increase has almost doubled, mainly through accelerated, private-sector groundwater development. At present, the irrigated area is almost 70 M ha, about 55% of which is surface irrigated and the rest served by groundwater.

2.4 Actual utilization in many completed irrigation projects remains significantly lower than planned due to over optimistic assumptions about system efficiency, farmer preference for water-intensive crops and lax system management. Experience varies widely over the country, however, with some states performing far better than others. Punjab, and the other areas of northwest India are among the most productive and successful irrigating states. In such states, increased attention is being paid to maximizing the productivity of existing infrastructure, and ensuring that the productive potential of land and water resources is sustained through investments as and when required in modernization, drainage, and flood control.

The State of Punjab

2.5 With a population of 17 M (1981), Punjab ranks thirteenth among the states in India. It is India's fifth most densely populated State with 333 persons per km^2 compared to an 1981 Indian average of 214.

2.6 The labor force constitutes about 32% of the total population. Female workers account only for 2% of the labor force. Cultivators and agricultural laborers are 36% and 23% of the labor force, respectively. Migrant workers meet much of the demand for construction and the peak agricultural season.

2.7 Between 1970/71 and 1983/84, State income grew at 4.7%/year, compared to an all-Indian growth of 3.6%. Annual per capita income averages Rs 3,500 (US$ 220), and grew at an annual rate of 4.0% compared to an Indian average of

1.6%. Agriculture has grown rapidly, and since its weight in the total State income is high (about 50%), this growth has influenced greatly the pattern of State income. Furthermore, the surpluses generated in the sector have provided the capital for investment in non-agricultural activities.

2.8 The average farm size in Punjab is about 3.8 ha. Due to higher rainfall in the sub-montane parts of the State, farm size is generally smaller than in the alluvial plains.

2.9 The rapid agricultural growth in the late 1960's accelerated the subdivision of the traditional family farm, though recently it appears that the increasing mechanization of Punjabi agriculture is leading to a trend of increasing farm sizes.

	Farm Size Distribution		
	1961	1971	1981
Below 1ha	7	38	19
1 - 3ha	28	31	19
3 - 5ha	25	14	28
5 - 10ha	31	12	26
10+ha	10	5	7
Total	**100**	**100**	**100**

2.10 Tenancy legislation, implemented since 1953, has been strictly enforced. Various related acts ensure the security of tenants. About 93% of all holdings are fully owned and self operated, and 7% partly owned and partly rented.

2.11 Land reform was enacted in 1950 and revised in 1972 when ceilings were imposed on family land ownership. A family unit of five persons may own either up to 7 ha of land receiving assured irrigation for at least 2 crops a year, 11 ha of land with one irrigated crop a year, or about 21 ha of rainfed land.

2.12 Punjab was the first State in India to provide at least a primary school in each of its villages. However, the literacy rate at 41% (1981 census) still lags behind the States of Kerala, Gujarat, Tamil Nadu and Maharashtra. Health centers are well spread throughout the State; each serves about 20,000 people within a 5 km radius. The Government of Punjab (GOP) has also been actively involved in rural drinking water supply. In 1986, about 71% of the villages in the State were provided with this service.

2.13 All of the villages in Punjab are electrified and agriculture accounts for 40% of total electricity consumption. Annual per capita power consumption is the highest in the country (except Delhi) at about 354 kWh compared to a national average of some 167 kWh. Well developed railway and highway systems provide Punjab with good access to the rest of India. National highways are connected by a comprehensive network of state highways and district village roads. About 97% of the villages are already accessible by all-weather roads.

2.14 Agricultural Supporting Services are generally well developed. High yielding varieties, fertilizers and pesticides are widely used, and the agricultural research program at the University of Ludhiana is among the most active in India. The Training and Visit extension system is currently being introduced with Bank support. Marketing facilities are particularly well developed for major crops, in all of which Punjab is a surplus producer. Commercially oriented agriculture, with significant support from credit institutions, has allowed a high degree of mechanization in the sector.

State Development Objectives

2.15 The Government of Punjab's development strategy stresses agriculture and rural development. The State Annual Development Plan for the current Five Year Plan includes the following specific objectives:

a) continued development of the main sub-sectors of the rural economy (agriculture, irrigation and electrification);

b) economic diversification and greater priority to rural industries;

c) increased allocations to social services, such as education and public health, with a view to maintaining the existing rate of progress in these services;

d) expanded employment opportunities especially for skilled and educated workers; and

e) investment promotion designed to raise the standard of living for the more backward rural communities.

The Agricultural Sector

2.16 Punjabi farmers are progressive and enterprising. The State led India in the "Green Revolution" beginning in the late 1960's. In 1985/86, it produced over 11% of total foodgrain production of India, while the net cultivated area was about 3% of that of India. Productivity per agricultural worker and per hectare of cultivated land is the highest in India. Some 60% of centrally-procured foodgrains (used for redistribution to deficit states) is produced in Punjab.

2.17 During the Green Revolution, production increases were dramatic, averaging 15% per annum for foodgrains. This trend was due to the combined effect of higher yields from the new crop varieties and rapid development of private groundwater resources, and hence increases in area irrigated.

2.18 The tempo achieved during the peak years of the Green Revolution has slowed considerably in recent years for several reasons: first, Punjab was a leader in the Green Revolution, and most of the potential gains—in terms of yield increases and cropping pattern changes—were captured very quickly; second, the scope for further development of groundwater is limited; and third, increasing waterlogging in saline groundwater areas is beginning to affect the area available for cultivation.

2.19 Thus, further increases in the intensity of cultivation and crop yields are increasingly dependent on better utilization of irrigation supplies through system modernization, such as lining to reduce losses, and improved control structures—and improved drainage in areas subject to seasonal flooding and waterlogging.

Bank Group Support

2.20 India's agricultural development efforts have attracted substantial support from the Bank Group, particularly to the irrigation program. Private groundwater development and other on-farm investments have been supported by a series of agricultural credit projects in individual states and through lines of credit to the National Bank for Agricultural Refinance and Development (NABARD). Construction of irrigation infrastructure and land development, designed to improve water use efficiency at farm level, have been financed through a number of irrigation and command area development projects, and through the National Water Management Project. Marketing, warehouses, seed development, horticulture, forestry, dairying and the development of drought

prone areas have also received assistance. A major effort in agricultural extension over the last fifteen years has resulted in reorganization of the extension services of all the major states to the Training and Visit system.

2.21 In the state of Punjab, the Bank group has supported the Kandi Watershed Area Development Project (Ln 1897-IN) components of national projects in extension, research, credit, seeds and dairy, as well as two irrigation projects - the Punjab Flood Protection and Drainage Project (Cr 15-IN) and the Punjab Irrigation Project (Cr 889-IN), which was successfully completed two years ago, (PCR 6/89).

III. THE PROJECT

Origin and Rationale for Bank Involvement

3.1 The Bank's assistance strategy to India is to support policies and investments that promote economic growth and social development in a context of macro-economic stability. The emphasis is on efficient resource allocation, increased efficiency in the public sector, and the appropriate targeting and delivery of support systems to the poor.

3.2 The recently completed Punjab Irrigation Project supported a program of watercourse and canal lining. Subsidiary components included groundwater monitoring studies, experimental subsurface drainage works, and trials of improved irrigation techniques. Canal and watercourse lining, the major investment in the project, was successfully implemented, generally to high technical standards. Project benefits (mostly from water savings due to reduced seepage losses) were close to appraisal projections. The project was well received by the beneficiaries, and the Government of Punjab sought further assistance for implementation of a continuing program of modernization.

3.3 During formulation of the proposed project, attention was paid to longer-term issues facing the irrigated agriculture in Punjab as full development of the state's water resources approaches. In particular, results from the groundwater monitoring studies, which paralleled similar analytical efforts in adjacent states (Rajasthan and Haryana) where Bank-supported projects are under execution, confirmed that actual and potential waterlogging is a severe threat to large areas of northwest India. This situation was described in a Bank report, which was presented and discussed at a seminar in India in May, 1988[1]. During preparation, the involvement of specialists with wide experience of surface and subsurface drainage problems brought new perspectives to the problem, and the consequent introduction of new standards and approaches.

The Project Area

3.4 Topography and Soils: The plains of Punjab form part of the vast Indo-Gangetic alluvial plain. The topography is gently graded and of low relief. In the west, the plain slopes towards the Sutlej River and in the southwest towards the desert adjoining Rajasthan. The plain is crossed by natural drainage ways which are meandering and widely spread.

3.5 Soils are light in texture, varying from silty to sandy loam. There is little salinity except in areas with high water table. Almost the whole of the area is already levelled, except for some dune areas in south west Punjab, which are progressively being brought into production.

---

1 The Rising Water Table and Development of Waterlogging in Northwestern India, July 1985

3.6 The Kandi Zone is formed by the outwash fans which have been deposited by numerous small, ephemeral rivers (choes) which originate in the Sivalik hills and debouch onto the Indus plains. The zone is about 5.0 km wide along the entire mountain front between the foothills and the plain proper. The alluvial deposits of the zone thicken rapidly westward from a feather edge at the contact with the outcrop of the Sivalik rocks to several hundred meters where they pass transitionally into the plain deposits. The Kandi zone deposits consist of lenticular bodies of silt, sand, gravel and boulder beds of varying thickness and lateral extent. The soils are light, well drained, and have slopes in the range of 1:400 to 1:700.

3.7 Climate: Annual rainfall averages about 720 mm with 85% occurring in the kharif season. However, variations in timeliness and amount of rainfall are large which make irrigation necessary for reliable crop yields. While temperatures seldom fall below freezing, ground frosts can occur in January especially on sandy soils. This causes little damage to cereals, but more sensitive crops like potatoes and mustard can be affected. The proportion of sunshine hours exceeds 50% in all months of the year.

3.8 Water Resources (Annex 1): The primary river basins involved in the project (the Ravi, Beas, and the Sutlej, Map IBRD 21800) are international waterways flowing through India to Pakistan where they join the Indus river. India and Pakistan are signatories to the Indus Waters Treaty (1960) which sets out their rights and obligations with respect to these and other tributaries of the Indus system. The Treaty gives India the unrestricted use of the Ravi, Beas, and Sutlej rivers for irrigation and other uses (Article II) and the right to utilize the natural channels of the rivers for disposal of drainage effluent (Article IV, Paragraph 8), provided "each Party will avoid, as far as practicable, material damage to the other Party" (Article IV, paragraph 2). Project works have been designed in accordance with the Treaty and do not give rise to the need for notification of Pakistan under the terms of the Treaty. Further, in the opinion of the Bank's staff, the project would not adversely affect the quality or quantity of the drainage effluent flowing into Pakistan.

3.9 The Indus Water Treaty of 1960 between India and Pakistan, allocated to India about 39,300 Mm^3 annually. Since 1960, two major storage dams have been built: Bhakra Dam on the Sutlej River, and Pong Dam on the Beas with storage capacities of about 7,190 Mm^3 and 7,290 Mm^3 respectively. The Thien dam, with a storage capacity of about 2,340 Mm^3 is under construction on the Ravi River. When completed, the ratio of reservoir capacities to average annual flow of the three rivers would be about 40%, permitting a reasonable degree of seasonal regulation. Distribution of these waters among the riparian states in India (Punjab, Haryana, Rajasthan and Himachel Pradesh) is governed by interstate agreements, and administered by the Bhakra-Beas Management Board.

3.10 The present crop intensity (rainfed, canal-irrigated and well-irrigated) is about 167% in the major commands of the plains. Water availability is the limiting factor to agricultural production. The traditional warabandi system of irrigation distributes water in fixed relation to the area served, thus ensuring that all farmers receive regular but limited supplies. Accordingly, the farmers practice light irrigation by conscious decision because this provides the highest returns per cubic meter of water available to them. Heavier irrigation is practiced in those areas where the water table is close to the surface, or poor drainage leads to frequent flooding during the monsoon, and in some areas where water allowances are relatively high because adjustments to the distribution system remain to be made following the reallocation of water at the time of the Indus Waters Treaty. In such areas, rice is the dominant crop.

3.11 Development of irrigation in the Kandi Tract is limited to some private and public tubewells, and seve al low dams (supported under the Kandi Development Project). Water has been allocated for a surface irrigation

system to cover about 22,600 ha, and the potential also exists for further, carefully planned groundwater development and the construction of more low dams. The Kandi tract is a particularly backward area of Punjab, and the Government gives high priority to improving economic conditions in the area.

Project Objectives

3.12 Punjab's investment program in irrigation, which would be supported through the proposed project, has the following objectives:

a) improving the productivity of the existing irrigation system;

b) raising living standards in the poorest and most backward areas of the state through development of irrigation facilities;

c) initiating drainage works, trials, and studies to address the short- and long-term environmental and production impact of the rising water table in the State of Punjab in the context of other basin states; and

d) further upgrading the efficiency and skills of the Irrigation Department.

3.13 A number of discrete investment components have been identified by GOP for implementation during and following the next Five Year Plan (1990-94) in support of these objectives. Others still require final detailed design, or clearance from central agencies, or are the subject of internal prioritization among competing alternatives for available resources. These two categories of investment—those selected and finalized for implementation, and those still to be scheduled—are referred to as the core and the non-core programs, respectively. In order to allow optimization of the program over time, to accommodate expansion of successful innovations, and delays due to unforeseeable events, the project would provide scope for some flexibility in the ultimate composition of the investment program. Some 90% of project funds would be allocated to a firm program of core investments, while the remainder would be used to support selected components of the non-core program.

3.14 This flexibility would be exercised within a well organized institutional framework, which has recently been established by GOP (Annex 17), and which would be further strengthened under the project. Furthermore, it should be noted that major components of the project would yield benefits in direct proportion to the work done, and thus can be advanced or delayed without prejudice to the returns to the investment. These characteristics would be exploited in the course of finalizing annual implementation plans.

Project Description

3.15 The project would include the following investments to support the objectives described above.

(a) <u>Improved irrigation efficiency</u> would be achieved through lining of canals and watercourses; modernized control structures in the canals, both to improve operation and to take advantage of potential power generation potential; and new radio communications facilities.

(b) <u>Agricultural development in the poorest areas of the state</u> would be achieved by developing the Kandi Canal; constructing public tubewells in suitable areas above the alignment of the canal; construction of low dams in the Kandi tract; and construction of lift irrigation facilities in areas adjoining the Sutlej-

(c) Drainage problems would be addressed through drainage works in and around currently waterlogged areas; equipment for improved maintenance; extensive pilot works in groundwater drainage; and an ongoing major technical study of the options for controlling the drainage problems of northwest India. Lining programs in main canals, distributaries and watercourses in areas with a rising water table would also provide drainage benefits.

(d) Institutional Development would be supported through emphasis on specialist skill development in specific aspects of water resource development.

3.16 In addition to these major components, a number of studies (predominantly related to the water balance and water allocation procedures within the State) would be supported.

Detailed Features (Core Program)

3.17 Lining of Watercourses (Annex 3, 16% of base costs) A watercourse typically serves 200-300ha, or 50-100 farmers. The farmers are jointly responsible for its operation and maintenance and for allocating water among themselves in fixed turns. Seepage from unlined watercourses results in local waterlogging, reduced supplies to tailenders, and wastage of water. In saline groundwater areas, this wastage is total; in sweet groundwater areas, some of the seepage can be recovered through wells.

3.18 Some 4000 km of watercourses would be lined in the following order of priority: (i) completion of works in areas initiated during the first project; (ii) waterlogged areas; (iii) saline groundwater areas; and (iv) sandy soil areas. The annual volume of water conserved by these works is estimated to be about 230 Mm^3, sufficient to irrigate about 40,000 ha.

3.19 Watercourses would be lined for about 70% of the full length. The beneficiaries are closely involved throughout the whole process of planning and construction. Lining provides the opportunity to improve the alignment, and increase the commanded area, since the lined channel runs at a higher elevation. The standard watercourse design has a brick rectangular section with an internal plaster seal. It has generally proved to be stable and successful. A limited number of failures have occurred in areas with expansive soils and high water table. For such conditions, GOP has recently developed and tested a brick lined, plastic sealed, semicircular section which has structural advantages, and is marginally cheaper to construct, though requiring a slightly wider overall right or way.

3.20 Canal Modernization and Improvements (Annex 3, 22% of base costs) The project includes the lining of 349 km of branch canals and 467 km of distributaries and minors. Canals have been selected in accordance with the following priorities: (i) saline groundwater areas; (ii) oversize sections; (iii) heavy loss reaches in sandy soils, and (iv) reaches where operational problems have occurred. The annual savings in water, based on measured losses in unlined and lined sections, are estimated to be 240 Mm^3. Important secondary benefits would include more precise regulation (in conjunction with the proposed regulator remodelling); reduction of waterlogging, and reduction in the land requirement.

3.21 The modernized channels would normally be constructed parallel to the original canals between major structures such as regulators and bridges, and the transition connected during a brief closure. This technique has been developed in Punjab to avoid closing the larger canals for the time required for conventional in-situ construction.

3.22 Modernization of System Regulation (Annex 4, 5% of base costs) In Punjab, main and branch canals are regulated, running at full or partial supply, whereas the distributaries are unregulated, running either full or empty. The existing controls in the regulated portion of the main and branch canals are mostly controlled by drop needles (kherries). In practice, these structures are impossible to adjust to ensure a regulated supply to the head of the distributaries. With adequate control, the supply of the authorized discharge at each distributary head will be possible, and the inherent storage characteristics of the canals themselves would provide limited storage to attenuate fluctuations in supply.

3.23 Various types of structure and configurations are possible, and each site must be treated according to its individual characteristics and the condition of the existing structure. The program includes the modernization of 80 cross regulators, 150 head regulators, 80 gauge sites and 90 new escapes.

3.24 The program of canal and watercourse lining together with the improved regulation requires the updating of the operational design to define the channel capacity and full supply levels at each control point in the system. Such plans would be developed for each major command prior to finalization of designs in that area.

3.25 Communications Network (Annex 5, 2% of base costs) Punjab's canal system has a combined length of about 12,000km, serving about 3 M ha of irrigated land. Communications depend on a single wire ground return telegraph and telephone network. The network includes over 100 Morse key telegraph offices and 300 hand magneto telephones owned by the Posts and Telegraph Department. Most of this equipment is sixty years old or more.

3.26 This system was the best available when the systems were originally designed and constructed. But with the construction of storage facilities on the Beas, Sutlej and Ravi rivers, a complex multi-purpose system has evolved which requires more reliable and co-ordinated operational control to improve productivity.

3.27 An integrated communication system would be constructed to provide communication between State and District offices for voice, teleprinter and high speed data terminals using a modern, high quality Time Division Multiple Access system with digital trunk links leased from the Department of Telecommunications. The system has been designed so as to take maximum advantage of existing communications facilities, and avoid duplication of services.

3.28 Drainage (Annex 6, 14% of base costs) The surface drainage component will provide for improvements to the existing system in about 200,000 ha of waterlogged areas in the Districts of Faridkot, Ferozepur, Bhatinder and Sangrur. Design criteria have been agreed during project preparation, and will be based on the Rational Formula for small catchments (up to 10 sq km) and on the USSCS procedures for larger catchments. The designs will be suitable for machine construction and maintenance. The works include construction of new link drains (795 km); resectioning existing drains to conform to agreed capacity criteria (1643 km), and construction of some 3000 associated structures, mostly small watercourse crossings, but also including rail and road bridges.

3.29 Drain construction will be by dragline, dredger and backhoe. The Irrigation Department has 27 draglines, 9 of which are over 25 years old and 18 are about 16 years old. Some of these machines are obsolete and some additional equipment will be needed. The project would include purchase of [illegible] str[illegible] fu[illegible]e.

3.30 Some 5,000 ha of subsurface drainage would be installed in a pilot program in the Districts of Faridkot, Ferozepur, Bhatinda and Sangrur. The areas to be selected are pockets of low lying land where the drainage levels are below the elevations that can be achieved by gravity outfall. The component includes (i) the procurement of a drainlaying machine; (ii) the laying of laterals and collector drains; and (iii) the provision of sumps and pumps to lift the drained effluent to disposal points.

3.31 The effluent will, in most cases be moderately to highly saline and cannot be used directly for irrigation. For this pilot operation disposal will be by conjunctive use (discharging into branch canals) or into evaporation ponds. This means of disposal will be adequate and safe for the purposes of the project, but recycling back to the system can only be done to a certain extent, since each time the effluent is recycled the salt concentration rises.

3.32 The ultimate solution to the disposal problem must be based on a regional solution to the water and salt balance problem. Agreement has been reached with GOI and the affected states that, in parallel with the project, under Terms of Reference agreed with the Bank, a study of the regional options for a long-term solution to the drainage requirements of Punjab, Haryana, and Rajasthan would be carried out. Agreement were reached at negotiations that the results of the study would be furnished to the Bank by December 31, 1992, and thereafter, a proposal for actions to be taken on the basis of the results and recommendations of the study.

3.33 The performance of this pilot subsurface drainage area would be monitored during the project, and the viability of the technique assessed. If successful, the program would be extended during the later years of the project. Proposed project investments have been carefully evaluated during preparation and appraisal to ensure that no adverse impact on downstream riparians would result.

3.34 The Kandi Canal Command Area (Annex 7, 12% of base costs) The proposed Kandi Canal would irrigate about 56,000 ha via a 139 km long canal. The command area covers a narrow strip lying to the east of the road running from Ropar, through Hoshiarpur to Dasuya. The main recharge effects of the Kandi Canal irrigation system will be within the command area and downstream of the command area (by lateral groundwater flow); the recharge effect of the Kandi canal system in the alluvial tract between the Kandi main canal and the foothills will be negligible. Under the project, about 20,000ha of new irrigation would be developed.

3.35 Kandi Zone Low Dams (Annex 8, 8% of base costs) More than 90 watersheds in the Kandi tract need protection against flood damage, and water resource development. Of these watersheds, 23 have identified sites for irrigation/flood control dams, of which three have been completed, one is under construction, and six have completed feasibility studies. Under the project, up to 9 sites would be developed to serve 6,700 ha. Benefits would include irrigation (the area is well suited to tree crops, which have been introduced successfully in completed commands), substantial reduction in flood damages in downstream areas, and availability of perennial water supplies for domestic use.

3.36 Construction of these dams would involve resettlement of about 150 families. The detailed provisions for resettlement and rehabilitation of oustees were agreed at negotiations (Annex 8, Appendix 1). Assurances were obtained from GOP that. socio-economic surveys of oustees would be conducted as a basis for determining their current circumstances, and preferences for rehabilitation; and that plans for resettlement and rehabilitation of oustees ensuring that they would at least regain their previous standard of livelihood would be consistent with standards agreed with the Bank. The agreed

arrangements would ensure that any oustee wishing to continue in agriculture would be able to do so: for marginal farmers, land would be provided at the expense of the project; for larger farmers, project authorities would assist the oustee to obtain equivalent land to that lost through purchase, using funds from the acquisition of his previous holding, supplemented by institutional finance. Landless laborers would be provided with houseplots, and at least one member of each landless family would be offered suitable employment. It was also agreed that resettlement and rehabilitation measures meeting the agreed standards would have been implemented for each dam six months prior to impounding of water. Where land was required to resettle oustees or provide replacement farmland, it was agreed that project beneficiaries would be encouraged to make land available to oustees, thus expediting the process of resettlement and rehabilitation. These arrangements would be carefully monitored during implementation, and adjusted as necessary after a minimum trial period of three years.

3.37 During negotiations, GOP provided evidence of the impact of its ongoing catchment stabilization works at the sites identified for Low Dams. These data indicated that in all sites, the silt load in the runoff has been reduced to levels substantially below those assumed in designing the facilities. This has been achieved through a multi-year program, which would be continued under the project. Assurances were obtained that GOP would maintain the existing levels of catchment protection at sites for proposed Low Dams.

3.38 Assurances were also obtained from GOP that the existing Dam Safety Review Panel would continue to operate, under Terms of Reference satisfactory to the Bank. The panel would meet regularly to review progress in design, construction, operation and maintenance of dams supported under the project.

3.39 Areas with Groundwater Potential (Annex 9, 6% of base costs) In the eastern part of the Kandi zone, groundwater is the only feasible source of irrigation and domestic water supply. However, development requires public sector intervention. The deep water table, and the existence of boulder beds in the soil strata preclude existing private sector construction techniques, and make the economic well size beyond the capacity of an individual farmer. The project would therefore support about 240 public tubewells, irrigating a total of about 10,000 ha. Although the benefits used in the economic analysis are based on their agricultural impact, these wells would provide a perennial source of safe drinking water to the areas served, as well as irrigation.

3.40 Well site selection has been restricted to areas with a known positive groundwater balance or where such a positive balance will be established after the implementation of proposed surface water irrigation development. Wells would be grouped in clusters to economize on the cost of power lines, and extensive command areas would provide the benefits of irrigation to as many farmers as possible, albeit with a reduced water supply. In consequence, although the living standards of beneficiaries would rise sharply, farm incomes would generally remain somewhat lower than in the main agricultural areas of the state.

3.41 Studies (Annex 10, 2% of base costs) The project would support a number of ongoing and new studies and pilot investments. The common objective of these activities would be to maximize the utility of available resources (through advanced irrigation techniques, conjunctive use of saline groundwater, exploitation of limited freshwater supplies through "skimming" wells; augmentation of groundwater through deliberate infiltration; and improved canal scheduling and improved operational guidelines, based on modelling studies, for stabilizing flows below the major storages). In addition, data collection facilities would be improved through establishing a network of groundwater monitoring wells, and regional weather stations.

3.42 Institutional Development (Annex 11, 2% of base costs) In most Indian States, engineers are expected to rotate, often frequently, between the

design, construction, operation and regulatory functions. To some extent this is an appropriate part of career development for younger engineers, but the development of specialist expertise, and awareness of the latest technical developments is inhibited. In consequence, GOP has recently established two specialist departments, each headed by a Chief Engineer. The first, the Central Design Office, provides support to field units for all detailed designs of facilities and structures. The second, under the Chief Engineer (Water Resources Planning) coordinates investment planning in the state. Creation of these two Departments, which complement existing Departments responsible for O&M, and Construction, establishes the basic framework for well organized sectoral development, as well as the working environment to encourage development of professional skills. The project would support institutional facilities (buildings and equipment), training, and study tours to reinforce the new organizational structure in specific areas, including Computer Aided Design, computer-based implementation planning, which would be introduced progressively during project implementation.

3.43 The project would also support the establishment of an in-service training institute for engineers (the Punjab Irrigation Management and Training Institute). The curriculum would be geared to the particular needs of Punjab, where standards for design, construction, and operation are well documented, and thus the study curriculum can be formulated specifically to meet the existing needs of the Irrigation Department.

Future Irrigation Development (Non-Core Program)

3.44 Several additional components are in a late stage of preparation (Annex 12, 10% of base costs), and on the basis of pre-feasibility estimates, appear to be economically and technically viable. A condition of disbursement against these components would be provision to the Bank of detailed cost and benefit estimates justifying the economic and technical viability of the investment, and a corresponding financing plan.

3.45 Canal Modernization In addition to the basic canal lining program, GOP has identified several areas where more radical modernization is required. These include commands where the partition of India resulted in reduced total area served by the main canals, and hence oversized and inefficient sections, and areas where river regulation now allows provision of year round supplies in place of seasonal allocations. In both cases, resizing of the distribution system is required. These components, in the Badshahi and Upper Bari Doab commands, would result in a net saving of water although more profitable year-round cropping would be introduced.

3.46 Hydro-power Development in the Upper Bari Doab The existing excess capacity in the main canal in the Upper Bari Doab can be exploited to generate power through a series of drops. Works would include provision of a link canal from areas served by the Ravi to the Beas river, to allow surplus irrigation supplies to be recovered for irrigation use in other commands.

3.47 Combined Bikaner/Eastern Canal Major improvements to system efficiency would be made possible by combining two large parallel canals—the Bikaner (which feeds Rajasthan) and the Eastern (which serves Punjab). These canals were constructed separately to serve their respective commands, and have been running continuously for many years. Their condition has deteriorated over this period, and the partial lining provided at the time of construction is no longer adequate, resulting in extensive local waterlogging. It is therefore proposed to combine the two channels into a single modern lined canal, saving water and releasing several hundred hectares of land to productive use.

3.48 Where practicable, canal modernization will include installation of micro-hydel units. While the total amount of energy generated will be small

are an attractive investment, particularly in combination with canal modernization.

3.49 Development of Lift Irrigation in Areas Adjacent to the Sutlej-Yamuna Link Canal (SYL) The SYL project is an interstate canal designed to transfer agreed quantities of water through the state of Punjab to Haryana. The canal passes through areas of Punjab which have limited irrigation facilities, and GOP proposes to augment the capacity of the SYL to carry water to these areas, and introduce surface irrigation on some 130,000 ha. The interstate agreement regarding the functioning of the SYL would not be affected by this change, but final clearance of the plans remains to be obtained from the Central Water Commission.

Project Implementation, Organization and Management

3.50 All project components would be implemented by the Punjab Irrigation Department, except for watercourse lining, which is the responsibility of the Punjab State Tubewells Corporation, a semi-autonomous state agency, and the installation of hydel units, which is the responsibility of the Power Department. All three agencies report to the Secretary, Irrigation and Power, GOP, who would have ultimate responsibility for project implementation. Civil works would be executed in accordance with the standards set out in the Punjab Public Works Department Specifications (1963) or such later specifications as are agreed with the Bank. Relevant standards to be followed, which have been reviewed by the Bank, are set out in Annex 2.

3.51 As noted above (para 3.12), the total cost of identified components considerably exceeds the likely resources available in the next Plan Period. Components already fully prepared for implementation within the plan period include lining of watercourses, canal modernization, the Kandi Canal, tubewell development, surface and subsurface drainage works, communications, and institutional and studies activities. These components would form the core of project investments, but additional investments in the other components described above would be supported subject to the arrangements set out in para 3.44.

Monitoring and Evaluation

3.52 Progress and quality of civil works components would be monitored through the normal procedures of the Irrigation Department. Progress would be reported seasonally to the Secretary Irrigation and to the Bank in relation to the annual work program. Quality is the primary responsibility of the field engineers in charge of works. An additional level of quality assurance is provided by the Vigilance Wing of the Irrigation Department. The purpose of this organization is to monitor, through spot-checks, that works are generally executed in accordance with specifications. This procedure is not designed to provide primary quality control, but rather to allow independent review (the Vigilance Wing reports directly to the Secretary) of performance. Experience under previous irrigation project indicated that the system is effective, and it would continue under the project. Annual reports of problems, remedies, and actions taken would be compiled for the Secretary and made available to Bank supervision missions. Use of Critical Path Planning techniques would be introduced under the project, specifically for implementation of the SYL project, and for the Kandi Low Dams. As experience is gained, the system would be expanded to include contract management.

3.53 Evaluation would be carried out through two mechanisms: first, as is current practice, the annual implementation plan would be based on analysis of experience in previous years, including reasons for shortfalls or exceedance of physical and financial targets. Additionally, specific evaluations of current and proposed techniques and designs would be undertaken within the [illegible] with [illegible] lysis of completed works.

Environmental Impact

3.54 The impact of the project works on the environment would be positive. The lining components in saline groundwater areas would slow the development of waterlogging; surface and sub-surface drainage investments would control and reduce existing waterlogging which both reduce the productivity of land and provide breeding grounds for water-born diseases. The investments in the Kandi Low dams, which follow catchment stabilization, would protect downstream areas from flash-floods and consequent annual damage to crops, and property over large areas, while oustees living standards would be restored or improved through the agreed program of R&R. Together with the tubewells and Kandi Canal, the dams would provide a reliable source of domestic water as well as irrigation supplies.

Operation and Maintenance, Cost Recovery

3.55 Canals are operated in accordance with clearly defined rules and priorities. The Plan of Operation is established and published in advance for each season, so that farmers know with considerable certainty when they can expect to receive water. Under the project, this system would be continued, but studies would be undertaken (Annex 10) to ascertain whether improvements in irrigation efficiency are possible through some rescheduling of priorities during the season.

3.56 The Chief Engineer (Canals) is responsible for maintenance of all canals in Punjab. Current levels of maintenance are generally good. Under his charge is a staff of about 2000, distributed throughout the commands. Under the Irrigation Rules, the Department is currently responsible for maintaining all works down to and including the irrigation outlet which serves 50-100 farmers. The farmers are responsible for maintenance below the outlet, but GOP has recently decided that in cases where maintenance of the watercourse is inadequate, this work would be undertaken departmentally at the expense of the beneficiaries. Initial funding for this work will be drawn from the Rural Development Fee, a charge already levied on marketed production, but ultimately, in accordance with Government Orders already issued, the beneficiaries would have to deposit in advance the expected maintenance requirement.

3.57 Irrigation charges currently amount to Rs 140 M, of which collections are 90%. Expenditures on maintenance are currently Rs 250 M, but this figure is under review by GOP and is likely to increase. Present levels of water charges cover about 70% of government expenditures on O&M, but very substantial additional revenues are generated through market taxes (Rs 600 M/yr) and through the Rural Development Fee (Rs 300 M/yr). Funds accumulated from the Rural Development Fee are to be allocated to O&M works while experience is gained in the cost of maintaining watercourses at government expense.

3.58 Assurances have been obtained from GOP that all canals and facilities above the irrigation outlets would be maintained so as to function in accordance with design specifications. In this connection, the program of performance monitoring (Annex 10) would provide the basis for determining that maintenance is adequate. Sufficient resources (funds, equipment, staff) would be provided to the Chief Engineer (Canals) to achieve this end. The resources provided for O&M of project facilities would be specifically identified in the annual state budget, and the source of such funds identified.

3.59 Public Tubewells would also be maintained by the ID through its State Tubewells Corporation. Cost recovery for O&M is structured around a metered charge for power, which is charged at the commercial rate (about four times the rate for private agricultural consumption). Overall, this leads to cost recovery for public tubewells which is somewhat lower than current recovery in

surface systems (about 50% through direct charges, versus 70% in surface systems). This is justified by the relative poverty of the well-irrigated areas, and the deliberate policy of extensive irrigation (paras 3.39-40) and the additional benefits to a wider group of beneficiaries through provision of domestic water.

Project Costs

3.60 Total project costs including physical and price contingencies for a seven year implementation program are estimated at Rs 7,364 M (US$392 million). Cost estimates are based on June 1989 prices for similar works recently undertaken in the state of Punjab. Physical contingencies varying between 5 and 10% have been applied to construction works, and 5% to machinery and equipment. Total physical contingencies are about 7% of base costs; local price contingencies are about 25% and foreign price contingencies about 18% of the respective base costs plus physical contingencies. Price contingencies are based on the following projected inflation rates by Indian financial year:

	1991	1992	1993	1994	1995	1996	1997	1998
Local %	7.2	7.0	6.9	6.6	6.5	6.4	6.1	6.1
Foreign %	6.5	4.4	4.4	4.4	4.4	4.4	4.4	4.0

The breakdown of costs by component is summarized below, and detailed in Annex 13.

Estimated Project Costs and Financing

	Rs M			US$ M			%F-
oreign Component	**Local**	**Foreign**	**Total**	**Local**	**Foreign**	**Total**	**Exchange**
System Modernization							
Watercourse Lining	522	27	549	31.6	1.7	33.3	5
Canal Modernization	721	39	760	43.7	2.4	46.1	5
Canal Regulation	171	10	180	10.3	0.6	10.9	6
Communications	72	8	80	3.8	0.4	4.2	2
Future Development	329	21	350	19.9	1.3	21.2	10
Subtotal	**1,814**	**105**	**1,920**	**110.0**	**6.4**	**116.3**	**5**
Kandi Area Development							
Kandi Canal	399	20	419	24.2	1.2	25.4	5
Kandi Low Dams	265	12	277	16.1	0.8	16.8	4
Tubewells	200	16	216	12.1	0.9	13.1	7
Subtotal	**864**	**48**	**912**	**52.4**	**2.9**	**55.3**	**5**
Drainage							
Surface Drainage	360	17	377	21.8	1.1	22.9	5
Sub-surface Drainage	90	4	94	5.5	0.2	5.7	4
Subtotal	**450**	**22**	**472**	**27.3**	**1.3**	**28.6**	**5**
Institutional Development							
Studies	29	25	54	1.8	1.5	3.3	46
Training	56	5	61	3.4	0.3	3.7	7
Subtotal	**86**	**30**	**115**	**5.2**	**1.8**	**7.0**	**26**
Total Baseline Costs	**3,214**	**205**	**3,419**	**194.8**	**12.4**	**207.2**	**6**
Physical Contingencies	240	13	253	14.6	0.8	15.3	5
Price Escalation	854	70	924	21.7	2.3	24.0	9
TOTAL PROJECT COST	**4,308**	**288**	**4,597**	**231.1**	**15.4**	**246.5**	**6**

Note: Including taxes and duties of about Rs 90 M (US$4.8 M equivalent).

Financing Plan

3.61 The Loan and Credit would finance 100% of foreign exchange costs, and 64% of local costs (67% of total cost). Total project costs would be financed as follows:

	Local	Foreign	Total
	- - - -	(US$ million)	- - - - -
GOI/State of Punjab	81.5	-	81.5
IBRD/IDA	149.6	15.4	165.0
Total	231.1	15.4	246.5

Financial provisions to be made by GOP are consistent with budgetary allocations for the project period.

Procurement

3.62 Civil Works: Works to be financed under the project would cost about US$204M excluding engineering and administration, and the cost of land. Most of these works would be small, labor-intensive, scattered, and hence unsuited to International Competitive Bidding. In addition, canal modernization works would be restricted by periods of closures. For the purpose of bidding, civil works can be grouped as follows:

a) LCB Contracts (US$184M). Contracts for lining of canals and modernization of watercourses would generally be grouped into packages of US$0.3-2.5M (Rs 5-40 M) each with convenient slices. The 13 low dams are scattered and cannot be grouped to form a package exceeding US$ 10 M. As such, these contracts would also be let under LCB procedures; however, prequalification procedures would be adopted as appropriate (contracts for each dam and distribution system would be awarded as a unit). LCB contracts would be based on a standard document approved by Bank. LCB procedures have been reviewed by the Bank and found generally acceptable.

b) Force account and Unit Price Contracts (US$20M). Some minor field channels would have to implemented within a limited period of time. Such works would be awarded under small unit price contracts following competitive bidding procedures. Installation of pilot sub-surface drainage works (US$5.8M) would be carried out departmentally, since no contractors are experienced in this type of work. Drilling of about 230 tubewells (US$6.0M) would also be carried out departmentally. GOP has established competent staff capable for drilling about 60 wells per year. At present there are no local contractors with trained personnel and equipment suited to the conditions in the project area. In addition, when the quantity of work is difficult to estimate in advance, such as repairs to existing systems, etc., small works would be implemented departmentally. The aggregate of force account contracts would not exceed 10% of all civil works.

3.63 Goods Vehicles and Equipment Vehicles equipment and goods costs are estimated at US$23M. For ICB procurement, a margin of preference of 15% of the CIF price of the imported goods would be extended to domestic manufacturers in evaluation of bids. Contracts for vehicles and small items which would not interest foreign firms estimated to cost less than US$200,000 each would be procured under LCB up to an aggregate value of US$2.0M. Certain minor items costing US$5000 or less would be procured through local shopping procedures up to an aggregate value of US$1M. Standard bidding documents for ICB and LCB acceptable to the Bank would be adopted. General rate contracts will not be acceptable as a substitute of LCB procedures (such contracts will

will not be acceptable as a substitute of LCB procedures (such contracts will be acceptable for any procurement under Local Shopping procedures).

3.64 Employment of Consultants. Services estimated at US$ 1.5M would be procured on terms and conditions satisfactory to the Bank on the basis of guidelines for the use of consultants by World Bank Borrowers and the World Bank as Executing Agency published by the Bank in August 1981.

3.65 Contract Review. All bidding packages and bid evaluation reports for civil works estimated to cost over $200,000 equivalent, covering about 50% of works contracts, for equipment and vehicles estimated to cost over US$ 100,000 equivalent, and all ICB contracts and contracts for consultant services would be subject to Bank's prior review. The remaining contracts would be subject to Bank's post review.

3.66 Procurement arrangements are summarized below; figures in parenthesis indicate amounts to be financed by the Bank:

	ICB	LCB	Others	NA	Total
	(US$ Million)				
Civil Works	-	170 (127)	20 (15)	27	217 (142)
Equipment, Goods and Vehicles	16 (14.5)	6 (4.5)	2	-	24 (19)
Training, Consultancy Services	-	-	4 (4)	1.5	5.5 (4)
TOTAL	16 (14.5)	176 (131.5)	26 (19)	28.5	246.5 (165)

Disbursements

3.67 Disbursements for all civil works under contracts exceeding US$200,000 and for equipment under contracts exceeding US$100,000 would be fully documented, as would disbursements for vehicles, consultancies, and training. For all other expenditures, IBRD/IDA would disburse against statements of expenditure (SOEs). Supporting documentation for SOE's would be available for inspection by supervision missions and auditors, and retained by GOP for one year after Bank receipt of the audit report for the fiscal year in which the last withdrawal from the loan/credit account was made.

3.68 Disbursements would be made against the following: (a) 75% of expenditures against works; (b) 100% of foreign expenditures or 100% of ex-factory costs or 65% of local costs of equipment and vehicles procured locally, and; (c) 100% of training and consultancy for institutional development. Retroactive financing of up to SDR7.8 million would be provided for expenditures made after July 31, 1989 on civil works. Disbursement are projected over a period of 8 years from January, 1990 to March 1998. Project completion is expected by September 1997, and loan/credit closing by March 31, 1998. In order to facilitate timely payments of project costs, a Special Account amounting to US$8M, equivalent to four months estimated average disbursements, would be established at the Reserve Bank of India. Replenishment of this account would be made quarterly, or when the Account is drawn down to about 50% of the initial deposit.

Accounting, Reporting Requirements and Audits

3.69 The Irrigation and Power Department of GOP would be subjected to normal central and state control and audit procedures which have proven satisfactory in the past. Audit reports would cover the special account, and would include

a separate statement as to whether SOE's submitted can be relied upon to support the related withdrawal. A separate record and accounts would be maintained for project expenditures. Assurances were obtained from GOP that accounts and financial statement would be submitted to the Bank within 9 months of the end of each financial year, and that accounts pertaining to project expenditures would be made available to supervision missions.

3.70 Assurances have been obtained from GOP that: semi-annual progress reports would be submitted to the Bank within three months of the end of each reporting period. These reports would compare actual and target physical and financial progress for ongoing project components, and would indicate the status of budgetary provisions for ongoing works, and for works proposed to be initiated within the following twelve months. A Project Completion Report would be prepared by GOP within six months of project completion.

Project Benefits and Justification

3.71 The project would result in incremental irrigated area due to lining and modernization of canals and watercourses, extension of canal commands and construction of new storages, wells, and distribution networks. Approximately 112,000ha of new irrigation would result. The economic rate of return of project investments varies by component (Annex 16). Canal lining in areas of saline or high water table has a return of 33%. Watercourse lining returns vary from 20-40% depending on whether the local groundwater is saline. Where the groundwater is saline, and little or no recovery of seepage is possible, the returns are highest, and such areas would have priority; where groundwater is fresh, and recovery of losses is possible, returns are lower, since the saving is restricted to non-beneficial evaporation (about one third of the seepage), plus the cost of pumping. Returns to tubewell and surface irrigation development in the Kandi area are lower, varying from 12-20%, but these investments provide the only significant basis for economic development in the poorest area of the state. Other project activities, in drainage, provision of improved regulation and communications, upgraded and modernized facilities for the Irrigation Department, and consultancy services to the Bhakra Beas Management Board, provide the basis for assuring sustainable improvements in agricultural productivity in the area of India which contributes by far the major share of surplus foodgrain production. The sensitivity of project returns to changes in costs and benefits is indicated in the table below.

Component	Base ERR%	Costs +10%	Benefits -10%	Switching Values Costs%	Switching Values Benefits%
Canal Lining	33	30	29	+40	-45
Watercourse Lining	20	16	18	+32	-35
Kandi Canal	20	17	18	+30	-29
Tubewells	15	13	13	+14	-14
Kandi Dams	15	12	13	+10	-14

3.72 At full development, the project would result in incremental production of about 136,000 tons of rice, 276,000 tons of wheat, and 5,000 tons of cotton. The incremental employment created would be approximately equivalent to 50,000 full time agricultural jobs.

Project Risks

3.73 The major risk to the project is that other demands on the State's resources will limit Government of Punjab's ability to fund the project. The project investment plan has been carefully related to the state's Five Year Plan to minimize this risk. Furthermore, major project investments (in lining, tubewell development, and drainage) are such as to generate benefits in direct and immediate proportion to the extent of development, so that the economic impact of delayed implementation is limited. The projected agricultural impact of the project is based on levels of productivity which are already widely achieved in the state. Farmers are fully aware of the

benefits of irrigation, and the value of water, so that the scope for increased production generated by the project is likely to be fully exploited.

IV. SUMMARY OF AGREEMENTS TO BE REACHED AND RECOMMENDATION

4.1 A condition of disbursement against additional components would be provision to the Bank of detailed cost and benefit estimates justifying the economic and technical viability of the investment, and a corresponding financing plan (para 3.44).

4.2 During negotiations, an assurance was obtained from GOI that the results of the study of regional drainage problems in NW India would be furnished to the Bank by December 31, 1992, and thereafter a proposal for actions to be taken on the basis of the results and recommendations of the study (para 3.32).

4.3 During negotiations, agreements were obtained from GOP that:

a) socio-economic surveys of oustees would be conducted as a basis for determining their current circumstances, and preferences for rehabilitation; and that plans for resettlement and rehabilitation of oustees ensuring that they would at least regain their previous standard of livelihood would be consistent with standards agreed with the Bank. These arrangements would ensure that any oustee wishing to continue in agriculture would be able to do so: for marginal farmers, land would be provided at the expense of the project; for larger farmers, project authorities would assist the oustee to obtain equivalent land to that lost through purchase, using funds from the acquisition of his previous holding, supplemented by institutional finance. Landless laborers would be provided with houseplots, and at least one member of each landless family would be offered suitable employment. Resettlement and rehabilitation measures would have been implemented for each dam six months prior to impounding of water. Where land was required to resettle oustees or provide replacement farmland, it was agreed that project beneficiaries would be encouraged to make land available to oustees, thus expediting the process of resettlement and rehabilitation. These arrangements would be carefully monitored during implementation, and adjusted as necessary after a minimum trial period of three years.(para 3.36)

b) the existing levels of catchment protection at sites for proposed Low Dams would be maintained (para 3.37)

c) the existing Dam Safety Review Panel would continue to operate, under Terms of Reference satisfactory to the Bank. The panel would meet regularly to review progress in design, construction, operation and maintenance of dams supported under the project (para 3.38)

d) civil works would be executed in accordance with the standards set out in the Punjab Public Works Department Specifications (1963) or such later specifications as are agreed with the Bank (para 3.50)

e) reports of problems, remedies, and actions taken as a result of inspections of civil works by the Irrigation Department would be compiled and made available to Bank supervision missions (para 3.52)

f) all canals and facilities above the irrigation outlets would be maintained so as to function in accordance with design specifications (para 3.58)

g) an agreed program of performance monitoring would provide the basis for determining that maintenance is adequate. Sufficient resources (funds, equipment, staff) would be provided to the Chief Engineer

(Canals) to achieve this end. The resources so provided would be specifically identified in the annual state budget, and the source of such funds identified (para 3.58)

h) accounts and financial statement would be submitted to the Bank within 9 months of the end of each financial year, and that accounts pertaining to project expenditures would be made available to supervision missions (para 3.70)

i) semi-annual progress reports would be submitted to the Bank within three months of the end of each reporting period. These reports would compare actual and target physical and financial progress for ongoing project components, and would indicate the status of budgetary provisions for ongoing works, and for works proposed to be initiated within the following twelve months. A Project Completion Report would be prepared within six months of project completion (para 3.70)

4.4 With the above assurances, the project would be suitable for an IBRD loan of US$15 million equivalent for a term of 20 years, including 5 years of grace at the Bank's standard variable interest rate, and an IDA credit of SDR 117.7 million (US$150 million equivalent) on standard terms with 35 years maturity.

INDIA

PUNJAB IRRIGATION AND DRAINAGE PROJECT

Water Resources

The Present System

1. The Beas, Sutlej and Ravi rivers constitute the major sources of water for surface irrigation in the states of Punjab, Haryana Rajasthan and Himachel Pradesh. (Map IBRD 21800)

2. The principal components of the system are summarized below.

(a) The Bhakra Dam on the Sutlej river, the highest straight gravity dam in the world.

(b) Gobind Sagar, the reservoir formed by Bhakra Dam, with gross storage capacity of 8855 Mm^3 (7.18 MAF) and live storage of 6860 MM^3 (5.56 MAF).

(c) Two power houses at the foot of Bhakra Dam, the Left Bank P.H. having an installed capacity of five 108 MW units, and the Right Bank P.H. with five 132 MW units.

(d) The Nangal Barrage, which picks up the water released at Bhakra Dam for diversion into the Nangal Hydel Channel and the Anandpur Sahib Hydel Channel.

(e) Two power houses, each with a capacity of 77 MW, at Ganguwal and Kotla on the Nangal Hydel Channel.

(f) Two power houses, each with a capacity of 67 MW, on the Anandpur Sahib Hydel Channel (owned and operated by Punjab).

(g) Headworks at Ropar, which picks up the water released down the river at Nangal and through escapes from the two hydel channels, for diversion into canals serving Punjab.

(h) Headworks at Harike below the confluence of the Beas and the Sutlej which picks up waters released downstream at Ropar and at the Pong Dam into the Beas and water diverted from the Ravi at Madhopur into the Ravi-Beas Link, for diversion into canals feeding Punjab and Rajasthan.

(i) The Pandoh Dam on the Beas above Pong which diverts water into the Beas-Sutlej Link.

(j) The Beas-Sutlej Link, a channel partly in tunnel and partly in the open, which lets the water diverted from the Beas into the Gobind Sagar through the Dehar Power House, with an installed capacity of six units of 165 MW each.

(k) The Pong Dam on the Beas with gross storage capacity of 8260 Mm^3 (6.70 MAF) and live capacity of 7120 Mm3 (5.77 MAF), and with a power house with six generating units of 60 MW each.

(l) Headworks at Madhopur on the Ravi which diverts water to the Upper Bari Doab Canal for irrigation in Punjab, to the Upper Bari Doab Hydel Channel (for generation of 45 MW owned by Punjab), and a link canal between the Ravi and the Beas.

(m) The Thein Dam (2345 Mm^3, 1.9 MAF,under construction) on the Ravi above the Madhopur diversion structure.

(n) An extensive canal system, of which the major channels are the Bhakra Main Line (continuation of the Nangal Hydel Channel), the Sirhind Canal and the Bist-Doab Canal taking off from Ropar, the Rajasthan Feeder and the Sirhind Feeder taking off from Harike, and the Sutlej-Yamuna Link (under construction), a continuation of the Anandpur Hydel Channel.

3. The Government of India set up the Bhakra Beas Management Board (BBMB) to manage these facilities. Punjab, Haryana, Rajasthan and Himachal Pradesh (HP) participate in key decisions on operating the system through representation on the Board, the Technical Committee and other forums for consultation. The BBMB has under its direct control all the dams, the Nangal Barrage and all the power houses except those on the Anandpur Hydel Channel and the Upper Bari Doab Hydel Channel. These power houses and the headworks at Ropar, Harike and Madhopur are operated by Punjab; the divisions of flows at the headworks are to be in accord with allocations made by the BBMB.

3. The system (other than some of the canals mentioned under item 7 above, and the Anandpur Hydel Channel and the power houses on it) was developed in three phases, as below:

(a) Bhakra-Nangal Project encompassing Bhakra Dam, Nangal Barrage, Nangal Hydel Channel, Bhakra Main Line, and the power houses at Bhakra Left Bank, Bhakra Right Bank, Ganguwal and Kotla.

(b) Beas Project - Unit 1 encompassing Pandoh Dam, the Beas-Sutlej link and the power house at Dehar.

(c) Beas Project - Unit 2 encompassing Pong Dam, and the power house at Pong.

Characteristics of the Water Resources

4. The most significant hydrological feature of the Bhakra/Beas system and the Ravi river is that snowmelt makes substantial contribution to flows in the rivers. Winter precipitation in the form of snowfall in the upper catchments gives rise to flows in April and May, making these rivers perennial. The catchment areas of the rivers also receive heavy rainfall during the monsoon season extending from late June to late September, from moisture bearing winds both from the Arabian Sea and the Bay of Bengal. Thus the monsoon season is marked by high river flows and floods. Winter rainfall occurs in a small measure due to cyclonic winds or westerly disturbances which pick up moisture

from the Arabian Sea on their way to the Himalayan region. This very phenomenon results in snowfall at higher altitudes.

5. The Sutlej River has its origin in Lake Mansarovar in Tibet. It covers a distance of about 300 km before entering Indian territory at Shipkila in Kinnaur District of Himachal Pradesh. The total catchment area of the Sutlej up to Bhakra Dam is 56860 sq. km., of which 37060 sq. km. lies in Tibet and 19800 in India. The whole of the catchment lying in Tibet gets snowfall and scanty rain. About 14650 sq. km. of the upper catchment in India, out of which 1240 sq. km. is under permanent snow cover, gets snowfall in winter and contributes substantial snowmelt. The major rainfall bearing area lies below Kalpa, and covers 8516 sq. km. The average annual rainfall in this area is about 1100 mm, with 75% to 80% of this occurring in the four monsoon months from June through September. It has been estimated that the snowmelt runoff contribution in the Sutlej varies from 50% to 60% of the annual runoff, depending on the quantum of snowfall in winter and rainfall in the monsoon period. Selected measures of runoff of the Sutlej at the Bhakra Dam site are given below:

Period 1911-12 through 1985-86

(a)	Average Annual Runoff	16,175 Mm^3
(b)	Annual Runoff at 50% Dependability	15,294 Mm^3
(c)	Annual Runoff at 75% Dependability	12,688 Mm^3
(d)	Maximum Annual Runoff	25,011 Mm^3
(e)	Minimum Annual Runoff	11,295 Mm^3

Deliveries to the Partner States

6. The average annual run-off available from the Beas, Sutlej and Ravi is about 39,300 Mm^3. Table 1 shows the actual annual run-off during the past five years which have been below average. Tables 2 and 3 show the actual deliveries of water and power to the partner states during the past 5 years.

Groundwater

7. Out of 17 000 Mm3 of annual net recharge to the groundwater, about 14 800Mm3 is drafted (net). The net draft included about 590 Mm3 utilization of saline groundwater in conjunction with canal supplies. The quality of the groundwater in the South-Western districts of the state, Bhatinda, Faridkot and parts of Ferozepur ranges from marginal to highly saline.

8. The majority of the tubewells are shallow, of strainer type with diesel or electric pumps delivering 5-15 l/s. There are about 650,000 shallow tubewells, 2250 deep tubewells and 6500 dug wells in the state. The groundwater resources have been developed almost entirely by the private sector, shallow tubewells and dug wells are all private ventures and only 0.2% of the tubewells are state owned.

Table 1

INFLOWS INTO THE BHAKRA-BEAS RAVI SYSTEM

	82/83	83/84	84/85	85/86	86/87
			Unit-Mm3		
Kharif (April 21-Oct. 20)					
1 Sutlej flows into Bhakra	12609	13762	10666	11112	12870
2 Beas flows diverted to Bhakr	2915	2752	2997	3223	3043
3 Beas flows at Pong	6824	7712	6210	8551	8639
4 Ravi flows at Madhopur	4872	5622	3778	4115	5088
Total	27220	29848	23651	27001	29640
Rabi (Oct. 21 - April 20)					
1 Sutlej flows into Bhakra	2472	2281	1843	2206	2254
2 Beas flows diverted to Bhakr	1235	1053	934	1159	1182
3 Beas flows at Pong	1440	801	749	1367	1386
4 Ravi flows at Madhopur	3287	2044	1705	2751	3313
Total	8434	6179	5231	7483	8135
Full Year					
Sutlej flows into Bhakra	15081	16043	12509	13319	15124
Beas flows diverted to Bhakr	4150	3805	3931	4381	4224
Beas flows at Pong	8264	8513	6959	9918	10025
Ravi flows at Madhopur	8159	7666	5483	6866	8401
Total	35654	36027	28882	34484	37774

Table 2

Water Deliveries Made to Partner States
1982/83 to 1986/87

Unit - Mm3

		1982/83	1983/84	1984/85	1985/86	1986/87
Kharif (April 21 to Oct. 20)						
1	Punjab	10,849	10,294	10,253	8,680	10,063
2	Haryana	3,645	3,334	1,559	3,030	3,601
3	Rajasthan	5,028	5,193	5,347	4,752	5,803
4	Delhi	161	118	162	236	254
	Total Deliveries	19,683	18,939	17,321	16,698	19,721
Rabi (Oct. 21 to April 20)						
1	Punjab	5,639	6,329	5,678	5,887	5,308
2	Haryana	3,345	3,420	2,993	3,499	3,475
3	Rajasthan	4,374	4,801	3,277	5,477	5,535
4	Delhi	433	401	395	338	375
		13,791	14,951	12,343	15,201	14,693
Full Year (April 21 to April 20)						
1	Punjab	16,488	16,623	15,931	14,567	15,371
2	Haryana	6,991	6,754	4,552	6,529	7,075
3	Rajasthan	9,402	9,995	8,624	10,229	11,339
4	Delhi	594	518	557	574	629
		33,475	33,890	29,664	31,899	34,414

Table 3

Energy Generated and Delivered - 1982/83 to 1986/87

Unit - MKwh

	1982/83	1983/84	1984/85	1985/86	1986/87
Generation					
Bhakra Power Houses	5,676	5,809	4,624	4,750	5,609
Canal Power House (Ganguwal & Kotla)	1,181	1,226	1,308	1,247	1,232
Dehar	2,610	2,731	2,943	3,106	3,131
Pong	1,461	1,526	1,199	1,493	1,739
Total	10,928	11,292	10,074	10,596	11,711
Delivery					
Punjab	4,006	3,836	3,478	3,660	3,953
Haryana	2,813	2,844	2,439	2,532	2,762
Rajasthan	2,302	2,439	2,046	2,188	2,409
Himachal Pradesh	231	298	261	211	223
Jammu & Kashmir	216	275	316	530	711
Delhi	-	(-)41	91	-	-
Others	842	1,006	813	937	1,004
Total	10,410	10,657	9,444	10,058	11,062

INDIA

PUNJAB IRRIGATION AND DRAINAGE PROJECT

Standards, Specifications, Criteria and Codes for Investigations, Designs, Construction and Water Management Practices for Irrigation and Drainage Works

General

1. Main work components of the project are: canal modernization and water course lining, Kandi Canal (Stage I), Kandi Low Dams, Sutlej-Yamuna Link (Irrigation works in Punjab), rehabilitation and modernization of canal regulation structures, surface and sub-surface drainage and public tubewells. The many project components would be designed by adopting standards and practices well established in the Irrigation Department (ID).

2. The glossary of terms used in investigations, planning, design and construction of project works would be those published by Bureau of Indian Standards (BIS) for river valley projects and in the ID's Manual of Irrigation Practices. Terms relating to irrigation management would be those defined in Northern India Canal and Drainage Act of 1873 and Punjab State Tubewell Act, 1954 with Rules and Notifications. Irrigation monitoring and assessment terms are defined in the Revenue Manual.

3. Latest versions of the BIS standards for investigation, planning, design and construction of various project components would also apply together with instructions contained in ID's Handbook for the Design of Lined and Unlined Channels and Masonry works, and in the Punjab State Tubewell Corporation's (PSTC) Water Course Manual (under revision). Publications on the standards or practices of Central Water Commission (CWC), Central Board of Irrigation and Power and of international organizations applicable to project works would also be consulted. Indian Road Congress (IRC) standards or those developed by ID would be followed for the construction of the project bridges.

4. Specifications of materials and works as given in the publication "Punjab PWD Specifications, 1963" would serve as standard specifications. These specifications supplement each item of the Common Schedule of Rates (CSR) adopted in ID. For work items involving new construction methods or technologies, new specifications as appropriate will be drafted by the ID authority competent to accord technical sanction. New specifications (materials/works) proposed for such works will be forwarded to Bank for comments.

5. Water allocation procedures to a beneficiary in canal commands are well defined and legalized in the State. The procedures have worked satisfactorily. These would be followed in the commands of new irrigation facilities to be built under the project.

6. Other publications on glossary of terms, standards, designs, codes and practices applicable for project implementation are short listed below. The list does not include ID publications quoted above:

Title	IS
Part I Irrigation Practice	4410 (Part I) - 1967Part 2
Part 2 Project Planning	4410 (Part 2) - 1967
Part 3 River and River Training	4410 (Part 3) - 1967
Part 4 Drawings	4410 (Part 4) - 1982
Part 5 Canals	4410 (Part 5) - 1982
Part 6 Reservoirs	4410 (Part 6) - 1983
Part 7 Engineering Geology	4410 (Part 7) - 1982
Part 8 Dams and dam sections	4410 (Part 8) - 1968
Part 9 Spillways and syphons	4410 (Part 9) - 1982
Part 10 Civil works of Hydro-electric Generation system including water conductor	4410 (Part 10) - 1969
Part 11 Hydrology:	
Section 1 General Terms	4410 (Part 11/Sec. 1) - 1972
Section 2 Precipitation and run off	4410 (Part 11)/Sec. 2) - 1972
Section 3 Infiltration and water losses	4410 (Part 11/Sec. 3) - 1973
Section 4 Hydrographs	4410 (Part 11/sec. 4) - 1977
Section 5 Floods	4410 (Part 11/sec. 5) - 1977
Section 6 Groundwater	4410 (Part 11/Sec. 6) - 1985
Part 12 Diversion Works	4410 (Part 12) - 1973
Part 13 Operation, maintenance	4410 (Part 13) - 1985
Part 14 Soil Conservation and Reclamation:	
Section 1 Soil Conservation	4410 (Part 14/Sec. 1) - 1977
Section 2 Reclamation	4410 (Part 14/Sec.2) - 1977
Part 15 - Canal Structures:	
Section 1 General Terms	4410 (Part 15/Sec. 1) - 1973
Section 2 Transitions	4410 (Part 15/Sec. 2) - 1973
Section 3 Flumes	4410 (Part 15/Sec. 3) - 1977
Section 4 Regulating works	4410 (Part 15/Sec. 4) - 1977
Section 5 Cross Drainage works	4410 (Part 15/Sec. 5) - 1977
Part 16 Gates and Valves:	
Section 1 Gates	4410 (Part 16/Sec. 1) - 1979
Section 2 Valves	4410 (Part 16/Sec. 2) - 1981
Part 17 Water Requirements of Crops	4410 (Part 17) - 1977
Part 18 Energy Dissipator Devices Stilling basins:	4410 (Part 18) - 1983
Glossary of terms used in water well drilling technology.	9439 - 1980

Canal Lining Standards

7. According to the instructions in the ID's Revenue Manual, longitudinal sections (L-Sections) of all channels in a Division must be checked at least once in 5 years. Those needing revision should be revised. The fact that the L-Sections have been scrutinised and found to be in order should be recorded by Executive Engineers (EE) on the back of each L-Section. This endorsement of the EE should be countersigned by the Superintending Engineer (SE). The L-Section of a channel may be revised by the SE provided that it has not been revised during previous five years or if the full supply discharge of channel is less than 100 cusecs.

8. The latest L-Section of a channel as checked and approved by the competent authority will form the basis for lining of canals either within existing section or by constructing a new parallel channel. If the prevailing full supply line differs from the sanctioned one considerably, detailed hydraulic surveys of the channel will be carried out before taking up lining work.

9. Lining of a channel either within an existing section or in a parallel new channel involves adjustment of outlets which would be approved by the Chief Engineer (CE). After completion of channel lining and final adjustment of outlets, the EE will inspect all outlets to certify that they draw their authorized discharges with full supply levels at the heads of channels.

10. Be ch Marks (BMs) at about 500-1000 feet (150-300 m) apart will be established along the side of the channel to be lined before commencement of the work. The BMs should be located so that they are not disturbed during lining activities. The BM levels should be co-related with the starting and closing GTs or canal BMs by double levelling. The correctness of BM levels fixed for construction work should be ascertained by check levelling done by an officer of ID independently. By the end of each day's work, a line of levels will be run returning to the starting point of that day to check the work done on that day. The permissible error in levelling is expressed as E = C*SQRT(M) where E = error in feet; M = distance in miles; and C = constant with values varying as follows:

Rough levelling	E = ± 0.4*SQRT(M)
Ordinary levelling	E = ± 0.1*SQRT(M)
Accurate levelling	E = ± 0.05*SQRT(M)
Precise levelling	E = ± 0.02*SQRT(M)

11. Main and Branch canals with discharges 350 cusecs and above will be lined with bricks on edge underlain with LDPE film. Flat brick and LDPE film will be used for distributary and minor lining. The specifications for lining distributaries and minors with bricks were prepared by ID's Central Design Cffice for Phase I works. Detailed specifications for canal lining with brick on edge will be prepared by the Central Design Office.

12. There are no IS publications on brick lining of canals. Nevertheless, the IS publications on canal lining listed as follows would be used for guidance:

Title	IS
- Earthwork on canals, code of practice	4701-1968
- Design of cross section of lined canals, code of practice	4745-1968
- Boulder lining of canals, code of practice	4515-1967
- Criteria for design of lined canals and guidelines for selection of type of lining.	10430-1982
- Guide for laying combination lining for selection of type of lining.	5690-1982
- Lining of canals with burnt clay tiles,	

code of practice.	3872-1966
- Lining of canals with low density polyethylene film, code of practice.	9698-1980
- Specifications for low density polyethylene films (second revision)	2508-1984
- Maintenance of canals-lined	4839 (part 2)-1979
- Under drainage of lined canals, code of practice.	4558-1983

13. Existing structures on canals and channels to be lined will either be remodelled or rebuilt according to ID or IS criteria. In case structures are found to be structurally safe, these would be suitably linked to upstream and downstream lined sections with adequate transitions and precautions to ensure that the LDPE film functions effectively at the inter faces and that there is no seepage at the joints. In case existing structures are to be linked to main or branch canal lined in parallel, these would be corrected with following minimum radii:

Discharge (Cusecs)	Radius (feet)
1500-2499	1000
2500-4999	1500
5000-7499	2000
7500-9999	2500
10,000 and above	3000

14. Decking designs on road crossings will be wide enough to allow passage of harvesting combines.

15. Outlets reconstruction on lined channels will either follow type designs issued by the Central Design Office or IS-Canal outlets, code of practice 7986-1976.

Water Course Lining

16. Rectangular brick section with inside plaster or half circular brick section resting on LDPE film, will be adopted. The Design Manual for water courses lining (Phase I) is being revised. The revised manual will be reviewed by Bank.

Low Dams

17. The following IS and other publications will apply:

A. Geological and Foundation Investigations

- Site investigation for foundations	IS: 10042-1981
- Sub surface investigation for foundations, code of practice	IS: 189-1979
- Diamond core drilling for site investigations for river valley projects, code of practice	IS: 6926-1973
- Guide for core drilling observations	IS: 5315-1980
- Indexing and storage of drill cores	IS: 4078-1980

- Presentation of drilling information and core description in foundation investigation	IS: 4464-1967
- Sub-surface explorations for earth and rock fill dams, code of practice	IS: 6955-1973
- Sub-surface explorations by pits trenches, drifts and shafts, code of practice	IS: 4453-1980
- Symbols and abbreviations for use in geological maps, sections and subsurface exploratory bores	IS: 7422-1974
- In-situ permeability tests, code of exploratory bores Part I. Tests in over burden	IS: 5529
- Part 2 Tests in bed rock	IS:1969 & 5529
- Recommendations for grouting of pervious soils	IS: 4497-1968
- Hand Book of Hydrology GOI. MOA Central Unit for Soil Conservation (Hydrology) and Sedimentation	IS: 10084 1982 - 1972
- Criteria for design of diversion works, Part I - Coffer Dams.	IS:
- Methods for fixing the capacities of Reservoirs - Part 1 to 4	IS: 5477 (1969-71)
- CWC Book on estimation of design flood peak and recommendations on water availability	
- Classification and identification of soils for general engineering purposes	IS: 1498-1970
- Material testing codes	IS: 2720-1971-85
- Guide for topographical surveys for river valley projects	IS: 5497-1983
- Guide for storm analysis	IS: 5542-1969
- Stability analysis of earth dams	IS: 7894-1975
- Drainage system for earth rockfill dams	IS: 9429-1980
- Free board requirements in embankment dams	IS: 10635-1983
- Design of under seepage control measures for earth and rock fill dams	IS: 8414-1973
- Code of practice for protection of slope for reservoir embankment	IS: 8237-1985
- Design, construction and maintenance of relief wells	IS: 5050-1986
- Drainage system for gravity dams, code of practice	IS: 10135-1982
- Design of small dams	USBR
- Earth Manual	USBR

B. Spillways and Escape Channels.

- Guidelines for fixing spillway capacity	IS: 11223-1985
- Recommendations for hydraulic design of ogee overflow spillways	IS: 6938-1973
- Criteria for design of chute and channel spillways	IS: 5186-1969

- Plain and reinforced concrete, code of practice	IS: 456-1978
- Recommended guidelines for concrete mix design	IS: 10262-1982
- Concrete Manual	USBR

C. Operation and Maintenance.

- Guidelines for operation of reservoirs	IS: 9323-1974
- Guidelines for safety inspection of dams	CWC: 1987
- Safety Evaluation of Existing Dams - 1980	USBR

Public Tubewells.

18. The practice, standards and guidelines for tubewell construction are as follows:

Part I Construction	IS: 2800-1979
Part II Testing	IS: 2800-1979
- Requirements for well screens and slotted pipes	IS: 11189-1985
- Methods of tubewell Development	IS: 11189-1985
- Specification for gravel for use as pack in tubewells	IS: 4097-1967
- Design of Gravel pack for Tubewells, Central Board of Irrigation and Power Publication, August, 1967	
- External upset drill pipe assemblies for use in water well drilling:	
- Part I screwed on joints drill pipe	IS:11312-1985
- General requirements for direct circulation rotary drilling rigs for water wells.	IS: 7206-1986
- Kellys for direct rotary drilling part I square and hexagonal Kellys	IS: 1180-1985
- Specification for submersible pumpsets for clear, cold, fresh water	IS: 8034-1976
- Specifications for steel tubes used for water wells.	IS: 7270-1983
- Ground Water and Wells (second edition) 1986 by Fletcher G.Driscoll	Published by Johnson, St.Paul,Minnesota

F. Surface and Subsurface Drainage.

19. The practice, standards and guidelines for design and construction of surface and subsurface drains are as follows:

- Guidelines for planning and design of surface drains	IS: 8835-1978
- Drainage Manual	USBR
- Guidelines for construction of river embankments	IS: 11532-1985

- Design of cross drainage works code of practice	7784-1975/80/83 (Parts I, II, III)

Rehabilitation and Modernization of Canal Regulation

20. Structures Rehabilitation and modernization proposals for canal regulation structures would be prepared after careful inspection of the condition of each structure during canal closures by a committee of senior officers of ID including design engineers (civil and mechanical) from Central Design Office. Selection of the structures for this work would be made by the CE (Canals), taking into consideration the rotational program of main, branch and distributary canals on each canal system. The stability of structures selected for modernization would be checked by the Design Office. The types of regulation gates (Godbole, BHEL etc.) to be installed for heading up to FSLs at control points during low supply in the parent channel would first be tested at one site before taking a decision on modernization proposals. Provisions in the publications listed in the following would serve as guidelines to plan, design and implement the works.

- Code of practice for design and construction of simple spread foundations	IS: 1080-1980
- Code of practice for subsurface investigations for foundations	IS: 1892-1979
- Guide for location, selection and hydraulic design of canal escapes	IS: 6936-1973
- Code of practice for design of cross drainage works	
- Part 1 - General Features	IS: 7784-1975
- Part 2- Specific Requirements Section 1 Aqueduct	IS: 7784-1983
- Criteria for hydraulic design of cross regulators for canals	IS: 7114-1971
- Recommendations for structural design criteria for low head slide gates.	IS: 5620-1985
- Recommendations for structural design of fixed wheel gates.	IS: 4622-1978

Monitoring and Evaluation (M&E) - Water Management

21. An important M&E activity during project period would be the seepage measurements in old and new canals and watercourses lined with and without LDPE films. The following standards would apply:

Measurement of seepage losses from canals, code of practice:

- Part I, Ponding Method	IS: 9452-1980
- Part 2, Inflow outflow Method	IS: 9452-1980
- Guidelines for assessment of seepage losses from canals by analytical method.	IS: 9447-1974

22. Existing procedures of flow measurements in various reaches and at control points of the irrigation systems, upstream and downstream of canal outlets would be studied. Recommendations to improve and refine water

management for delivering the allocated supply at farm gates would be made. The following standards would apply for the flow measuring operations:

- Glossary of terms and symbols (used in connection with)measurements of liquid flow with a free surface.	IS: 1191-1971
- Guide for selection of methods for measuring flow in open channels.	IS: 9922-1981
- Instructions for collection of data for the determination of error in measurement of flow by velocity area methods.	IS: 2915-1964
- Velocity area, methods for measurements of flow of water in open channels.	IS: 1192-1981
- Liquid flow measurements in open channels using the plate weirs.	IS: 9108-1979
- Liquid flow measurement in open channels by weirs and flumes-weirs of finite crest width for free discharge.	IS: 6059-1971

23. Evaporation loss from reservoirs to be created by Kandi Low dams will be monitored. IS. 6939-1973 on methods of determination of evaporation for reservoirs, would apply.

24. An important M&E activity would be to measure annual water and sediment inflow into Kandi Dam Reservoirs. Observations for each reservoir site (existing or proposed) would be published in the form of an Annual Report. Findings in the report would be used to refine rainfall - run off relationships adopted for each catchment and taking steps to minimize entry of sediment into the reservoirs. This work would be undertaken by a division already functioning for the purpose in Kandi Canal Administration. The following standards would apply:

- Estimation of discharges by establishing stage discharge relation in open Channels, recommendations.	IS: 2914-1964
- Measurements of suspended sediment open Channels.	IS: 4890-1968
- Control of Sediment in reservoirs, code of practice Bank Guidelines to establish vegetative contour hedges.	IS: 6518-1972

Sutlej Yamuna Link (Punjab Component).

25. The standards to be followed for works on SYL components are listed below.

A. Civil Works

I. Hand Book of Instruction for the Design of Lined and Unlined Channels and Masonry Works.

II. Bureau of Indian Standard Publications.

a) IS: 456-1978 Code of practice for plain and reinforced concrete (3rd revision with amendment No. I).
b) IS: 269-1976 Ordinary and low heat portland cement (3rd revision with amendments 1 to 5).
c) IS: 1786-1985 High strength deformed steel bars and wired for concrete reinforcement (3rd revision).
d) IS: 432 (Part I) 1982 Mild steel and medium tensile steel bars (3rd revision).
e) IS: 1139-1966 Deformed bars for Concrete Reinforcement Not Rolled mild steel and medium tensile steel.
f) IS: 1986-1981 Code of practice for hard chromium plating on iron and steel (for general engineering purpose) (1st revision).
g) IS: 875-1964 Code of practice for structural safety of buildings loading standards (reinforced) (with amendment No. 1)
h) IS: 2131-1981 Method for standard penetration test for soil (1st revision).
i) IS: 1904-1978Code of practice for structural safety of buildings shallow foundation (2nd revision).
j) IS: 2950 Code of practice for design and construction of raft foundation
k) IS: 2950 (part-I) 1981 Design (2nd revision).
l) 7215-1974 Tolerance of fabrication of steel structures.
m) IS: 5620-1985 Recommendations for structural design criteria for low head slides gates (2nd revision).
n) IS: 8009 - Part I 1976 Shallow foundation subjected to symmetrical static vertical loads (with amendment No.I).
o) IS: 6531-1972 Criteria for design of canal head regulators.
p) IS: 3873-1976 Code of practice for laying in situ cement concrete Lining on canals (1st revision).

q) I.S. 4745-1968. Design of Channel (for rugosity co-efficient and free board).
r) I.S. 7784. Code of practice of design of cross drainage.
s) I.S. 6403. Code of practice determination of allowable bearing capacity in shallow foundation.
t) I.S. 8408. River Training Work.
u) I.S. 8009. Part I: For determination of B.C. in shallow foundation.

v) I.S. 3370. Stresses in steel for water retaining structure.

II. Indian Road Congress Publications

a) IRC: 5-1985 Standard specification and code of practice for road bridges (section I) General features of design (sixth revision).
b) IRC: 6-1966 Standard specification and code of practice for road bridges (section II) Loads and Stresses.
c) IRC: 21-1972 Standard specification and code of practice for road bridges (section III) cement concrete (plain and reinforcement) (1st revision).
d) IRC: 40-1970 Standard specification and code of practice for road bridges (section IV) Bridges, stone and block masonry.

IV. SYL Specifications

a) Specification No.Earthwork specifications for SYL 2-SYL (const-II) Canal Project.
b) Specification No.Concrete specifications for SYL 3 - SYL.Canal Project.

B. Mechanical Works

1. Design of fixed wheel gates, stop-logs, radial gates and specification for purchase of their hoists

a) IS-4622-1978. Recommendations for structural design of fixed wheel gates.
b) IS-5620-1985. Recommendation for structural design criteria for low head slide gates.
c) IS-4623-1979. Recommendation for structural design of radial gates.
d) IS-11855-1986. Rubber seal for hydraulic gates erection
e) IS-807-1976. Code of practice for design, manufacture, erection and testing (Structural portion).
f) IS-6938-1973. Code of practice for design of rope drum and chain hoist for hydraulic gates.
g) IS-2266-1977. Steel wire ropes for general engg.purposes.
h) IS-1893-1975. Criteria for earthquake resistant design of structures.
i) IS-7215-1974. Tolerances for fabrication of steel structures.
j) IS-2709-1982. Guide for selection of fits.

II. Preparation of Specifications for Purchase of E.O.T. (electrically operated overhead travelling) and H.O.T. (Hand operated travelling) cranes.

a) IS-3177-1977. Code of practice of electric overhead travelling cranes and gantry cranes other than steel works cranes.
b) IS-807-1976.Code of practice for design manufacture erection and testing (Structural portion) of cranes and hoists.
c) IS-2266-1977. Steel wires ropes for general engg.works.
d) IS-1554. PVC insulated heavy duty cables.
e) IS-3109. Round steel link chain (Electric butt. Welded) Grade 40.

II. Specifications for Purchase of Pumping Equipment for SYL (including motors and other electrical accessories).

a) IS-325. Specification for three phase induction motor.
b) IS-2223. Dimensions of flange mounted AC induction motors.
c) IS-2254. Dimensions of vertical shaft motors for pumps.
d) IS-2253. Types of construction and mounting of motors.
e) IS-4691. Degrees of protection provided by enclosures for rotating electrical machinery.
f) IS-2118. Specification for flame proof enclosure of electrical apparatus.
g) IS-6362. Designation of methods of cooling for rotating electrical machines.
h) IS-900. Code of practice for installations and maintenance of induction motors.
i) IS-4029. Guide for testing three phase induction motors.
j) IS-4722. Specification for rotating electrical machines.
k) IS-4889. Methods of determination of efficiency of rotating electrical machines.
l) IS-4728. Terminal marking for rotating electrical machinery.
m) IS-966. Single phase small AC and Universal electric motor.
n) IS-3202. Code of practice for climate proofing of electrical equipment.
0) IS-2848. Platinum resistance thermometer elements
p) IS-1885. Electro-technical vocabulary (Rotating-(Pt XXXV) machinery).
q) IS-781. Guide for testing insulation resistance of rotating machines.
r) IS-8789. Values of performance characteristics for three phase induction motors.
s) IS-3043. Code of practice for earthing.
t) IS-5120 1977. Technical requirement for rotodynamic special purposes pumps.
u) IS-1710 1972. Vertical turbine pumps for clear, cold and fresh water.
v) IS-6875 1973 (Part III). Push Button and related control switches.
w) IS-2959 1975. Contractors for voltages not exceeding 1000 V-AC or 1200 V-DC.
x) IS-1822 1967. AC motor starters of voltages not exceeding 1100 V.
y) IS-694 1977. PVC Insulated cables for working voltages up to and including 1100 V.

INDIA

PUNJAB IRRIGATION AND DRAINAGE PROJECT

Canal and Watercourse Lining

Scope, Benefits and Costs

1. Watercourses About 4,000 km of watercourses serving 426 chaks are included in the project. Each watercourse with a capacity greater than 0.6 cusecs will be lined to about 70% of its length, and no shareholder will be more than 1000 ft from a lined channel.

2. The distribution of watercourses by physical characteristics is;

Ongoing schemes	70,678	ha
(mostly saline groundwater and/or waterlogged land)		
Waterlogged Zone	4,419	ha
Saline Groundwater Zone	10,000	ha
Sandy Tracts	84,403	ha
Total	169,500	ha

3. Seepage from watercourses short circuits the irrigation process and is not passed productively through the physiological system of the crop. About two thirds of the leakage passes directly to the groundwater. In saline areas the leakage to groundwater cannot be recovered for productive use. In sweet water areas partial recycling is possible but at the cost of pumping. The reduction in leakage is estimated to be 234 Mm3, sufficient to irrigate about 39,000 ha.

4. There are significant secondary benefits including improved areal distribution which brings a better supply to all parts of the chak, reduction in filling time at the start of the turn and reduced operational losses. In addition, there are reductions in the cost of maintenance. The obviously improved system reliability also encourages farmers to invest in better inputs to their operations. These secondary benefits are difficult to quantify and have not been taken into account in the economic analysis.

5. The total estimated base cost is Rs 1,290,000 per chak. The area served is 169,500 ha and the cost per ha is Rs 2954. The average area per chak is 398ha (982 acres). Map IBRD 21801 indicates the scope of the watercourse program.

6. Canals The lining of canals will be restricted to (i) saline groundwater areas; (ii) oversize sections (e.g. Old Lahore Branch); (iii) selected heavy loss reaches in sandy soils; and (iv) reaches where special operational problems have occurred. In addition some reconstruction of earth canals will be included.

7. The savings in water are estimated to be 240 Mm3, sufficient to irrigate about 54,000 ha. Additional benefits will accrue from reduced maintenance and better operation. About 349 km of branch canals and 467 km of distributaries and minors will be modernized at a base cost of Rs 828 M. Map IBRD 21801 shows the location of the canals to be lined.

Operation and Maintenance

8. Watercourses Farmers are at present responsible for maintenance below the outlet. Generally, this arrangement has proved satisfactory, but GOP has recently decided that in cases where maintenance of the watercourse is inadequate, the work would be undertaken departmentally at the expense of the beneficiaries. Initial funding for the work will be drawn from the Rural Development Fee, a charge already levied on marketed production for purposes which include improving irrigation facilities. Ultimately, in accordance with Government Orders already issued, the beneficiaries would have to deposit in advance the expected maintenance requirement.

9. Canals The Chief Engineer (Canals) is responsible for maintenance of all canals in Punjab. Current levels of maintenance are generally good. Under his charge is a staff of about 2000, distributed throughout the commands.

10. Irrigation charges currently amount to Rs 140 M, of which collections are 90%. Expenditures on maintenance are currently Rs 250 M (about Rs 80/ha), but this figure is under review by GOP and is likely to increase. Expenditures on maintenance appear low because they do not include the costs of operating the main Bhakra-Beas complex which is operated as an autonomous utility by the Bhakra-Beas Management Board, and is fully self financing through revenues from the sale of electricity. In addition, there are no controls to be operated on the irrigation system below the distributary head (typically 5 000-10 000 ha level), which limits the number of operators required.

Watercourse Design Characteristics

11. Watercourse Hydraulic Design. All watercourses will be lined for about 70% of the full length. The lined section will be either rectangular or semicircular. The hydraulic design will be based on a Manning 'n' of 0.019 and the Lacey 'f' will not be less than the associated upstream distributary.

12. Watercourse Structural Design. The standard design of the watercourses in Phase I was a rectangular section, with an internal plaster seal. While this design has proved entirely satisfactory in practice, the ID has constantly searched for ways to improve the design and reduce the costs. As a result of trials with various designs over the past several years, the section proposed for Phase II in areas where the water table threatens the foundation stability of the lined section is a semicircular brick lined section with either an internal plaster seal or an external LDPE seal. The features of the semicircular and rectangular sections can be summarized as follows.

13. The semicircular section uses less bricks and is about 20% cheaper overall than the conventional rectangular design, and provides the possibility

of mechanical compaction for the whole section including side earth banks. The semicircular section is structurally comparable with the rectangular section. Cleaning is easier than the rectangular section. However the strip of land required in fill sections is about 1-2 m more than the rectangular section. The proposed external LDPE film is dependant on the integrity of the side banks which experience has shown to be vulnerable to cultivation by farmers. For this reason an internal plaster seal will be needed in high embankment sections.

14. The rectangular section has been well proved in 30,000 km of watercourse over the past 20 years and is less susceptible to damage by farmers cultivating close to the channel. It takes marginally less land in embankment sections which are most common in the watercourse alignment.

15. The conclusion is that the lower cost of the semicircular section has to be balanced principally against the marginally wider strip of land consumed in embankment sections. The project will permit either design to be used as appropriate for the particular site.

16. For the conventional rectangular design, the earthworks will be mechanically compacted to 90 % Standard Proctor up to the base formation level. The bed will be 3" flat brick and the sides 4 1/2" brick set in 1:5 cement sand mortar. The inside surfaces will be plastered with 3/8" thick 1:3 cement sand plaster. The external embankments will be hand compacted.

17. For the semicircular design, the pad method of construction will be used. The earthworks will be mechanically compacted to the full embankment profile to 90 % Standard Proctor, and the semicircular section excavated either by hand or back hoe. For cut sections, a 200 micron LDPE seal will be placed directly on the prepared earth. For fill sections, the LDPE film will be omitted and an internal 3/8" thick 1:3 cement plaster seal will be provided. In both cases a 3" flat brick lining will be laid in 1:4 cement sand mortar. Chart IBRD 45296 shows the watercourse designs.

18. Watercourse Division Structures (Nakkas) The main weakness in the current watercourse lining program is the design of the nakkas. The thin steel plates sliding in narrow grooves are subject to corrosion, theft and choking of the groove. The farmers have had to resort to temporary substitutes using clay plugs borrowed from the nearby banks. Accordingly, the design will be changed to a simpler concept using sloping side benches and a bed bench. The benches will be one course of bricks wide. The shutters can be any material, steel, concrete or wood and the bench design makes the need for an accurate fit in a groove unnecessary. The bench nakka will be used for both the rectangular and semicircular watercourses. Chart IBRD 45669 shows the nakka design.

19. Watercourse Monitoring. A randomly selected sample of about 20% of the watercourses constructed (10% rectangular and 10% semicircular) will be examined one year after construction and the loss over the lined length measured with a portable V notch or flume. A report on the results of the measurements, together with a description of the condition of the channel and nakkas will be provided. Repeat measurements and reports will be made on the same sample annually (See Annex 10 for details).

Canals Systems

20. Operational Requirements. The canal systems have been operated for up to 100 years and rotational procedures are well established. Nevertheless a review will be made of the methodology to see whether there are any possibilities for improvement with the better regulation and canal facilities which will be provided under this project, or any changes called for in connection with the proposed extensive micro hydro plan. The operational plan for each major main branch showing the rotational options will be reviewed and hence the regulation required determined.

21. From the operational plan, the regulation requirements, flows and FSLs at all nodal points will be defined and published, so that all those involved from the on-farm level upwards will have clear and unambiguous objectives in the design for service to the farmer.

22. Implementation of Works and Standards. The canal, distributary and watercourse remodelling will be planned in such a way that the facilities are completed in operational units. All materials and workmanship will comply with agreed Standards (IS) (Annex 2).

23. Selection of Canal Lining Seal. The Phase I canal lining program was based on a standardized cup, or split cup section. The lining specification for the Phase I program consisted of standard bricks laid flat (for channels up to 500 cusecs) or laid on edge (above 500 cusecs) in 1:3 cement sand mortar on a seal layer of 3/8" 1:3 cement sand plaster underlain with a blinding layer of 1:5 cement sand plaster. This specification has been used for several decades and has proved to have satisfactory structural and sealing characteristics. Prior to lining, seepage losses average 2.4-3 $m^3/s/Mm^2$. After lining, losses are typically in the range 0.5-0.6 $m^3/s/Mm^2$ (1.5-2.0 $cusecs/Mft^2$). For further improvement of the lining performance, and cost reduction, trials have been done over the past eight years, in parallel with the Phase I program, on the use of LDPE film in place of the plaster seal. After extensive testing under site conditions of 400, 600, 800, 1000, and 1200 gauge (100,150,200,250,300 microns) LDPE film it was found that 400 gauge was invariably heavily pinholed, 600 gauge occasionally pinholed and 800 gauge rarely damaged in laying. No damage to 1000 and 1200 gauge was observed. Based on these results, 800 gauge was adopted for extensive trials. About 250 km of distributaries and minors were included in the pilot program and regularly monitored. Seepage, measured by ponding, was in the range of 0.06-0.15 $m^3/s/Mm^2$ (0.2-0.5 $cusecs/Mft^2$). No case of peeling off of the brick skin has occurred. There is no sign of compression failure at the toe of the brick lining. Nor has any other defect developed in the pilot reaches. The cost of the LDPE sealed section is about 10% less than the plaster sealed section. It is concluded that the case for using LDPE for channels in the range tested (i.e. < 500 cusecs) and under the quality control provided is satisfactory, and there is no reason to doubt that, under similar conditions of quality control, the technique can be extended to branch canals.

24. Policy to be Adopted for Stage II. Based on the evidence described above, either the conventional plaster or an LDPE seal may be used. The lining program for the larger branch canals which use LDPE will be closely monitored for two years after construction, including leakage measurements by

ponding methods and close inspection for structural defects. Regular performance reports will be prepared and forwarded to the Bank for review.

25. Canal Hydraulic Design. The canal design will be based on a Manning 'n' value of 0.018 for brick lined sections. For earthwork sections the 'n' value will follow measured values in the original canals.

26. Lined sections (Diagram....) will generally be either cup (b=0) or split cup (b > 0) where high groundwater level conditions indicate the use of a larger width/depth ratio. The radius of curvature for the cup section will be standardized in extensive reaches of channel. The minimum Lacey 'f' will be consistent with the upstream channels. The maximum velocity will be 2 m/sec and Froude Nos between 0.9 and 1.1 will be avoided.

29. Earth sections will have a defined width/depth (W/D) ratio related to discharge. The W/D ratio may be either derived from Lacey values or arbitrarily fixed based on running experience. Both maximum and minimum Lacey 'f' values will be consistent with the upstream conditions.

30. Canal Structural Design. Earthworks will be mechanically compacted to a minimum dry density of 95 % standard Proctor.

31. Lining will be standard brick as follows:

Canal discharge < 350 cusecs:

Side slopes and bed:	(i)	3" flat bricks in 1:3 cement sand mortar;
Seal:	(i)	3/8" thick 1:3 cement sand plaster seal which is placed on 1/2" thick 1:5 cement sand plaster blinding layer; or
	(ii)	800 gauge (200 micron) LDPE film.

Canal discharge >350 <500 cusecs:

Side slopes:	(i)	4 1/2" brick on edge, laid herringbone bond, in 1:3 cement sand mortar;
Seal:	(i)	3/8 thick 1:3 cement sand plaster seal which is placed on 1/2" thick 1:5 cement sand plaster blinding layer; or(ii)800 gauge (200 micron) LDPE film.
Bed:	(i)	3" flat brick in 1:3 cement sand mortar;
Seal:	(i)	3/8" thick 1:3 cement sand plaster seal laid over 1/2" thick 1:5 cement sand plaster blinding layer; or
	(ii)	800 gauge (200 micron) LDPE film.

Canal discharge > 500 cusecs:

Side slopes and bed:	(i)	4 1/2" brick on edge,laid herringbone bond, in 1:3 cement sand mortar;
Seal:	(i)	3/8" thick cement sand plaster seal which is placed over 1/2" thick 1:5 cement sand plaster blinding layer; or

(ii) 1000 gauge (250 micron) LDPE film.

32. The LDPE film will be laid directly on the prepared compacted earth except where sharp stones or roots indicate the need for a plaster blinding layer. The structural design of all embankments will be as homogeneous compacted fill. Dispersive clays should not be used for embankment material. In zones of high water table, drainage from behind the lining will be provided, vented to a sealed drainage pit which can be pumped dry if ever the canals have to be drained for maintenance.

33. Computer Programs. Microcomputer programs will be prepared by GOP for the rapid design and checking of the hydraulic designs described above.

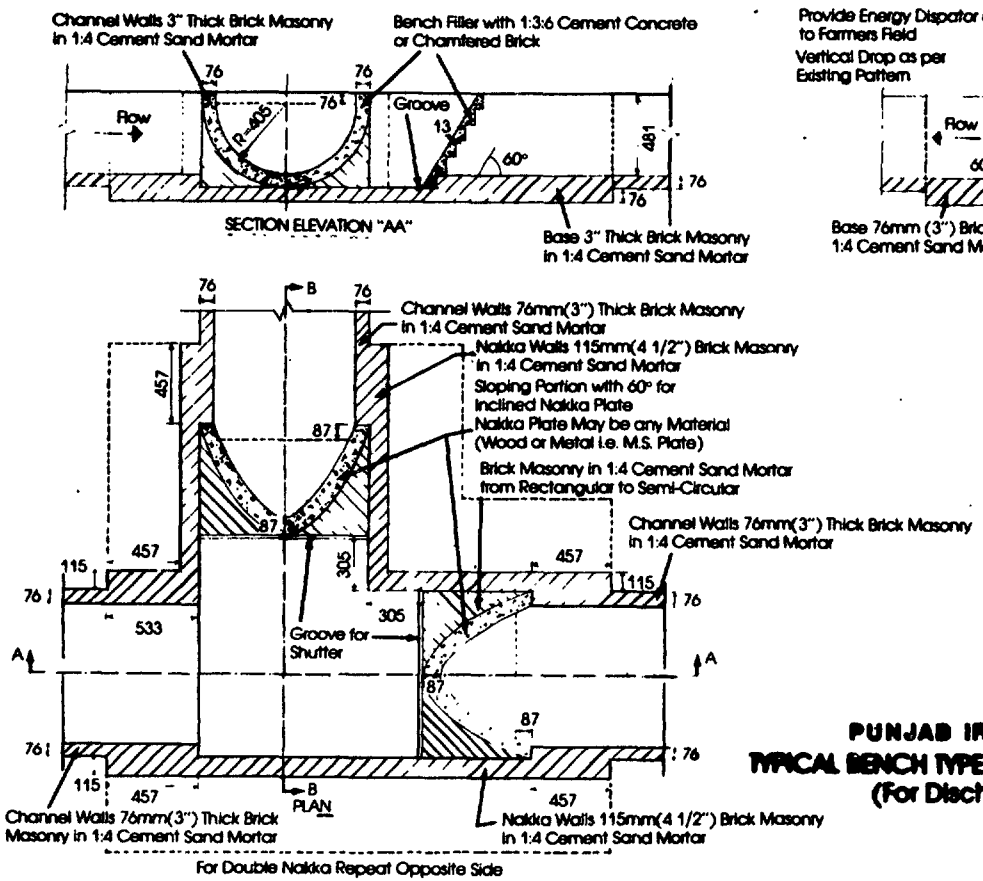

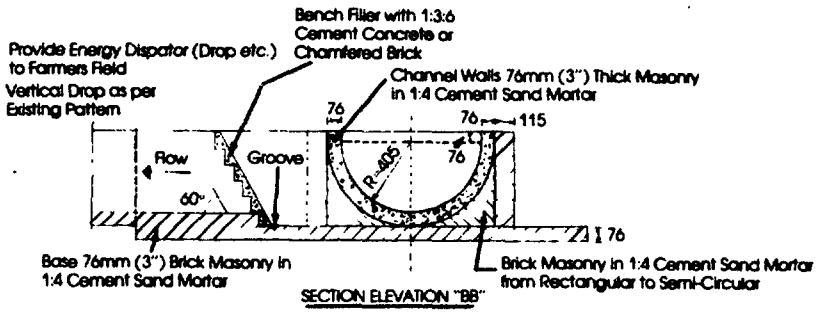

NOTES

1. Typical cross-section in for discharge of 0.0707 cumec (2.50 cusec.), bed slope of 0.25% and free board of 75mm (3")
2. The drawing is subject to modification as per field trial
3. Shutter details shall be according to material selected
4. All dimensions are in millimeters
5. The value of n - 0.015 for plastered section and n 0.018

SCALE

0 100 300 500 700mm

PUNJAB IRRIGATION AND DRAINAGE PROJECT

TYPICAL BENCH TYPE NAKKA FOR SEMI—CIRCULAR WATERCOURSES

(For Discharge of 0.0707 Cumec (2.50 Cusec))

World Bank — 45669b

INDIA
PUNJAB IRRIGATION AND DRAINAGE PROJECT
Watercourse Lining
Semicircular Section

Semicircular sections with 3" Thick brick masonry 1:4 over laid on 200 micron thick LDPE film.

DATA
Discharge = 56 l /s
Slope = (non silting f>System Lacey f)
Value of 'N' = 0.019
R = 366mm
Free Board = 76mm

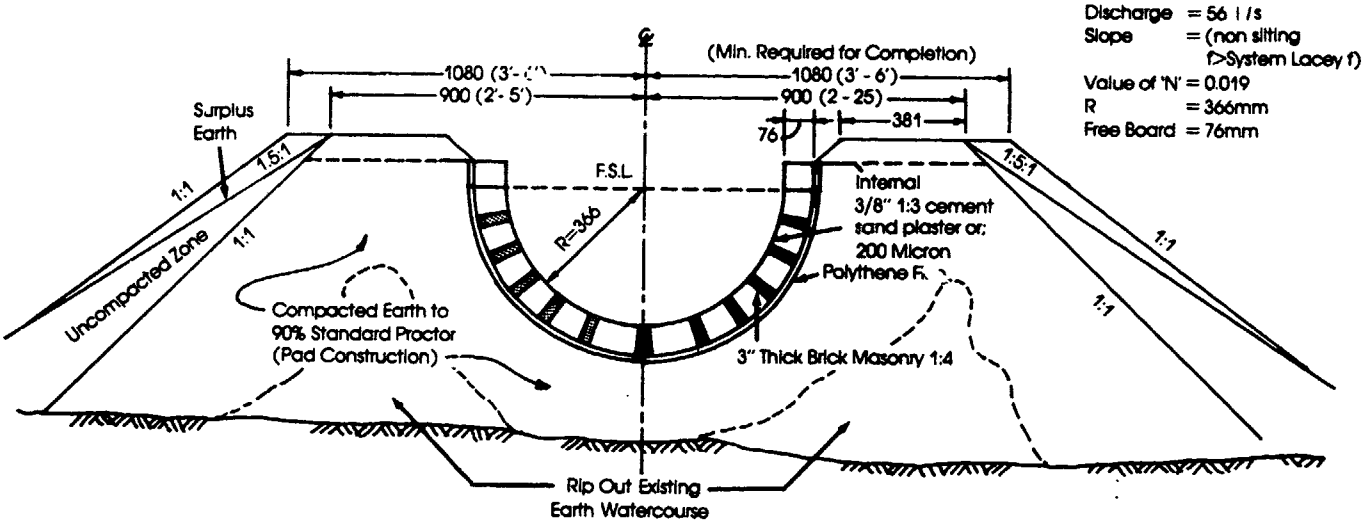

Typical Section

NOTE: 1) Internal plaster seal to be used for embankments >1.0m high which may cause exposure of the external LDPE 200 Micron film.
2) Metric dimensions in mm.

Watercourse Lining
Rectangular Section

4-1/2" Thick masonry 1:5 on sides and 3" thick brick masonry 1:5 in bed with cement plaster 1:3, 3/8" thick on bed, side walls and top of walls.

DATA
Discharge = 56 l /s
Slope = (non silting f>System Lacey f)
Value of 'N' = 0.018

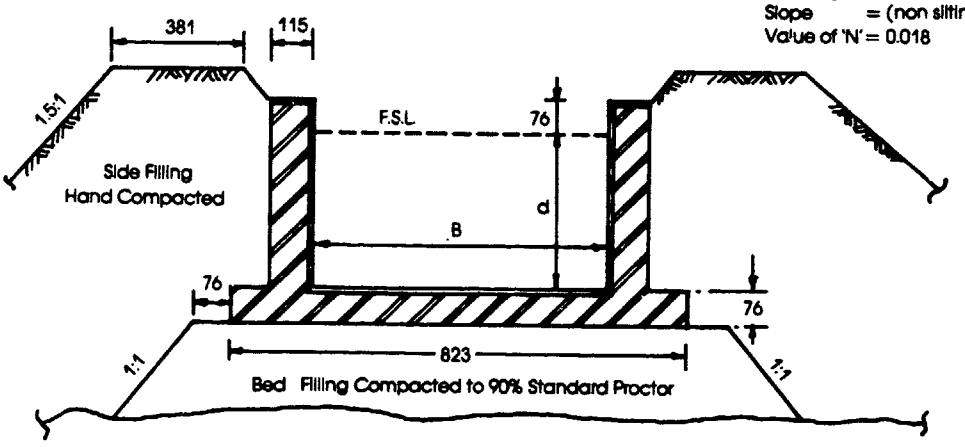

Typical Section

World Bank-45296

SECTONS FOR LINING THE DISTY/MINORS

Scale 1/25

Section for Disty/Minor May Either be Cup Shaped or Trapezoidal as per Site Conditions For Side Slope Refer Note No 2

CUP SECTION

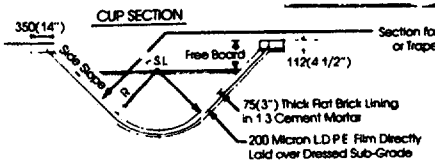

TRAPEZOIDAL SECTION

For Distributary and Branch Canals with Discharge up to 15 Cumecs (529 Cusecs)

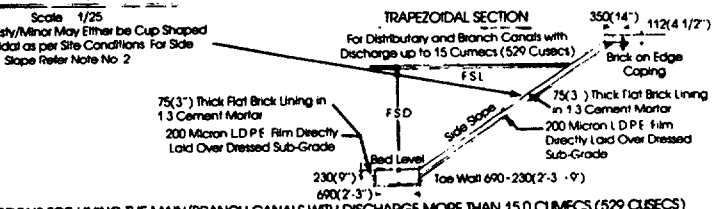

DETAIL OF POLYETHELENE ANCHORING

Scale 1/8

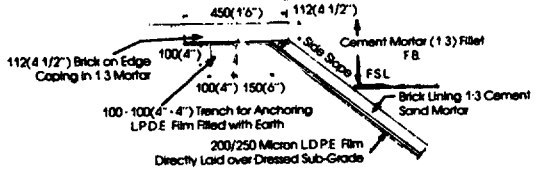

SECTIONS FOR LINING THE MAIN/BRANCH CANALS WITH DISCHARGE MORE THAN 15 0 CUMECS (529 CUSECS)

Side Slope 1 25 1 For FSD 1 0 to 2 0 Meters

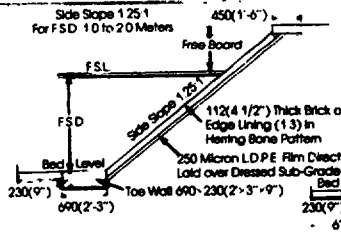

Scale 1/25 Side Slope 1 5 1 for FSD Above 2 0 Meters

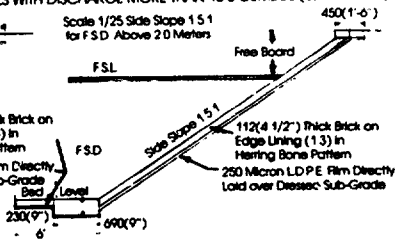

DETAIL OF TOE WALL FOR 75(3") THICK LINING

Scale 1/8

For Minors/Distys and Branch Canals with Discharge up to 15 Cumecs (529 Cusecs)

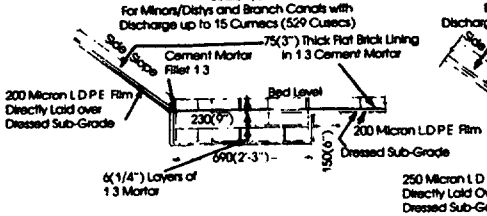

DETAIL OF TOE WALL FOR 112(4 1/2") THICK BRICK ON EDGE LINING

Scale 1/8

For Main/Branch Canals with Discharge More to 15 Cumecs (529 Cusecs)

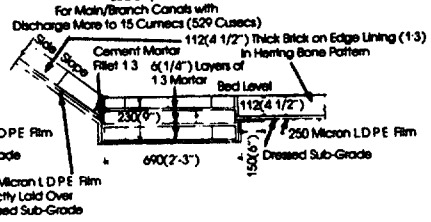

DETAIL OF HERRING BONE PATTERN

Scale 1/12.50

For 112(4 1/2") Thick Brick on Edge Lining in 1 3 Cement Mortar

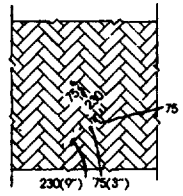

Notes:

1 The thickness of brick lining to be laid over the polyethelene film for various capacities of channels shall be kept as under

(i) For Disty/Minors and 75(3") thick flat branch canals with discharge brick lining up to 15 cumecs (529 cusecs)

(ii) For Main/Branch canals 112(4 1/2") thick brick with discharge more than on edge lining 15 cumecs (529 cusecs) in herring bone pattern

2 In view of the provision of a polyethelene film under the lining, the side slope of the channel shall be kept as under

RANGE OF F S DEPTH/RADIUS	SIDE SLOPE
(i) F S depth/radius up to 1 0 meter	1 1
(ii) F S depth/radius from 1 0 meter to 2 0 meters	1 25 1
(iii) F S depth/radius above 2 0 meters	1 5 1

3 The free board for various capacities of channels according to I D practice shall be kept as under

CAPACITY OF CHANNEL	FREE BOARD
(i) Up to 10 cumecs (up to 353 cusecs) discharged	450(1 50')
(ii) From 10 cumecs to 15 cumecs (from 353 cusecs to 529 cusecs) discharge	400(2 0')
(iii) More than 15 cumecs (more than 529 cusecs) discharge	750(2 50')

4 The toe wall of the junction of side slope and flat bed shall be provided in case of polyethelene lining when the bed width 'b' is greater than 0 i e in case of trapezoidal sections only

5 Suitable provision for drainage behind lining will be made in high water table reaches at the time of construction where ever required.

6 All dimensions are in millimeters. The dimensions in brackets are in feet/inches

NOTE

The sections and details are subject to suitable modifications during the course of work implementation as per site conditions

SCALE 1/25 0 500 1000 2000mm 3000mm

SCALE 1/12.5 0 500mm 1000mm 1500mm

SCALE 1/8 0 500mm 1000mm

PUNJAB IRRIGATION AND DRAINAGE PROJECT

Canal Lining Details

World Bank — W45669c

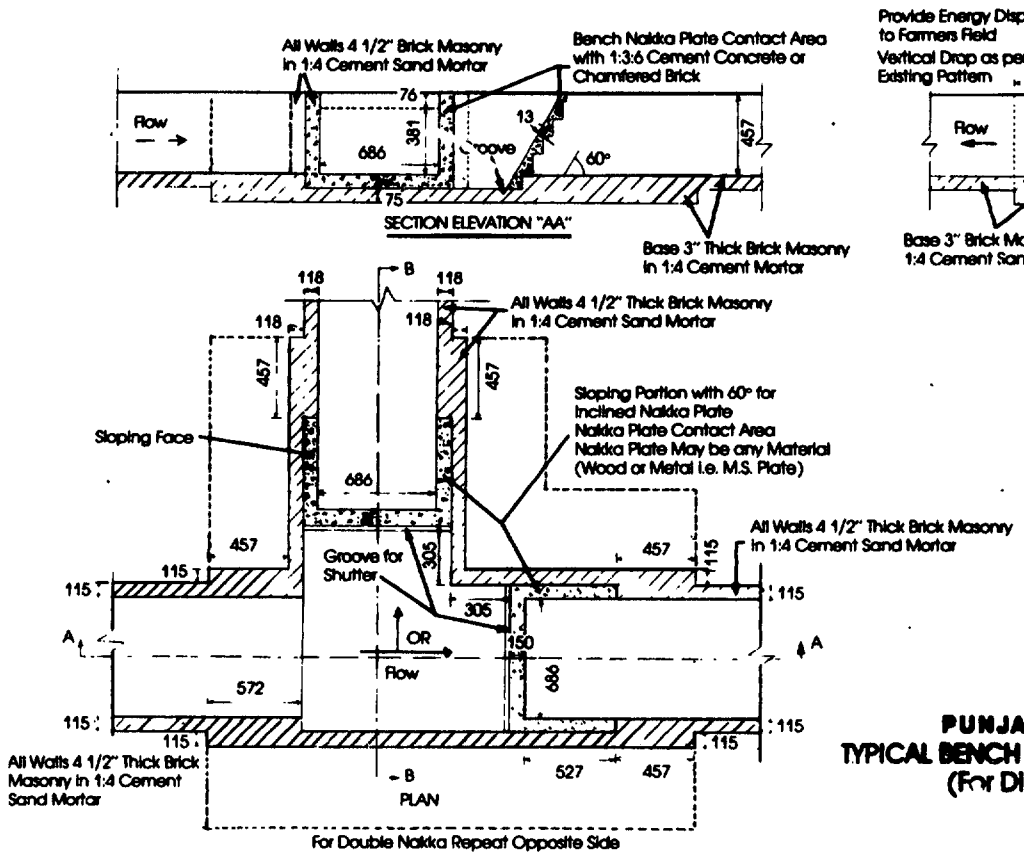

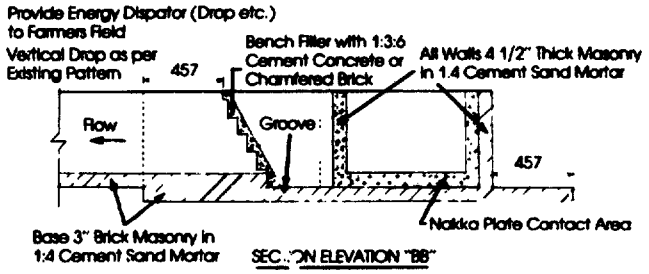

NOTES

1. Typical cross-section in for discharge of 0.0707 cumec (2.50 cusec), bed slope of 0.25% and free board of 75mm (3")
2. The drawing is subject to modification as per field trial
3. Shutter details shall be according to material selected
4. All dimensions are in millimeters
5. The value of n 0.015 for plastered section and n=0.018

SCALE

0 100 300 500 700mm

PUNJAB IRRIGATION AND DRAINAGE PROJECT

TYPICAL BENCH TYPE NAKKA FOR RECTANGULAR WATERCOURSES

(For Discharge of 0.0707 Cumec (2.50 Cusec))

World Bank — 45669a

INDIA

PUNJAB IRRIGATION AND DRAINAGE PROJECT

Regulation of Surface Water For Irrigation.

Background

1. The Bhakra-Beas-Ravi complex delivers water to four main distribution points, Ropar, Madhopur, Shah Nehar and Harike/Ferozepur (Map IBRD 21800). Indents for delivery to these points are placed with the BBMB by the three riparian users and a regulated supply delivered by systems of main and branch canals to heads of distributaries. The distributaries and minors deliver a supply to the watercourse outlets. The distributaries and minors run either full on or off in rotational turns. The rotational turns may be continuous, or staggered to suit the demand or the supply. The supply delivered to the watercourse, whenever the distribution system is running, is a convenient farm stream of 30-60 l/s and is distributed within the chak by rotating the whole stream. The distributaries and minors are not regulated; they are designed for area-proportional distribution.

2. Although the BBMB has a high degree of control through the storage available, there is significant unplanned variability in the supply caused by uncontrolled run-off below the dams and by operation for power. The BBMB is actively pursuing a program to improve the operational capability, but the canal system will always have to accept some unplanned variations.

Existing Control Structures

3. The regulated portions of the system, the main and branch canals, are upstream controlled by cross regulators using drop needles or 'kerries'. As in any upstream controlled system, escapes are provided to cater for accidental mismatching of inflow and outflow. The regulators have to be adjusted each time there is a change in the rotational flows because of planned irrigation or in response to rainfall. The drop needle regulation mechanism are the source of considerable inefficiency, allowing leakage between each needle and requiring several hours to set and reset. At the distributary head structures, the kerries allow leakage during the period when the distributaries are 'off'. The leakage cannot be used directly and evaporates, or finds its way to the groundwater. While such leakage can be re-pumped from the sweet water zones a pumping cost is incurred: from the saline zones the leakage is all lost. The kerries at the regulators take several hours to adjust and in this period the rotational flows cannot be guaranteed to the distributary heads. The savings result both from preventing leakage to non running distributaries and from eliminating the time interval for the manipulation of regulation by the drop needles. Savings in water could result from both causes are estimated to be of the order of 100 M m3 (0.09 MAF) per year. In addition, the current communication system is inadequate to ensure a balance in the input and output to each system with consequential losses through the escapes.

Proposals for Improvements of Control Structures

4. The project proposes to provide more easily managed regulators and an improved communication system (Annex 5). In addition, provision is made for a computer based operational monitoring system which will provide the possibility of more sophisticated operation than the current priority rotations (Annex 10).

5. The desirable hydraulic characteristics of the regulators for upstream control will be to provide constant upstream levels in spite of changing flow through the structure. A number of options have been evaluated for this, including the use of long weir controls and a number of automatic gates.

Modernization Scope

6. Cross Regulators, Canal Head Regulators, Autorecorders and Escapes will be modernized or provided as follows:

	Cross Regulators	Head Regulators	Auto Recorders	Escapes Gated	Escapes Spillway
Sirhind Canal System	33	29	30	14	23
Sirhind Feeder	7	18	14		7
Eastern Canal	5	14	7	6	2
UBDC	26	45	14	4	11
Bist Doab Canal	6	31	5	2	10
Bhakra Main Line	3	13	10	3	8
Total	80	150	80	29	61

The base cost of the component is summarized in Annex 13, Table 5.

INDIA

PUNJAB IRRIGATION AND DRAINAGE PROJECT

Communications Systems

Introduction

1. The management of the water regulation system for storage, power generation, irrigation requires a canal control system which is capable of being regulated, and a management service which has access to data. For the latter, a reliable communication network is essential.

2. There are now 117 telegraph offices and 318 magneto type telephones, operated by the Irrigation Department to monitor the daily discharges at major headworks, and in main branch, distributary and minor canals. The single wire earth return telephone system is over 70 years old and has no direct link with the State Headquarters in Chandigarh. Both the telegraph and telephone land lines are vulnerable to storm damage and are frequently down at times when they are most urgently needed.

High Quality Digital Communication System Master Plan

3. It is proposed to replace the existing telegraph system with a high quality digital communications communication system to provide secure communications for regulation of releases from Bhakra, Pong and eventually Thein dams, for canal regulation in the State and for flood warning. A Master Plan has been developed for the communication system, and will be implemented under the project.

4. Agreement has been reached with the Department of Telecommunications (DOT) for the leasing of high quality digital trunk circuits between the main Circle and District offices. The field operations will be linked to the trunk system with high quality digital Time Division Multiple Access (TDMA) satellite systems. The objectives of the system will be to:

a) fulfill both State Headquarters and District Headquarters communication requirements while simultaneously integrating District Headquarters, Circle Offices and Field Offices into a State wide network;

b) have the ability to expand and adopt to new communication requirement and to establish temporary radio links with field offices of the Communication Circle and with flood/drainage monitoring points of the Irrigation Department;

c) provide direct time shared telemetry links from important regulation head works to the State Headquarters for regulation monitoring;

d) provide direct teleprinter and fax links from District Headquarters to State Headquarters for passing messages from various Circle Offices located in a particular region;

e) provide intercommunication between each station located in the jurisdiction of each District Headquarters; and

f) provide access to the state and national DOT system and hence to the Punjab State Electricity Board and the Bhakra Beas Management Board and anyone connected to that system.

5. System Description The TDMA systems will be installed at the following centers and hooked into the DOT trunk network at these locations.

(i) Chandigarh
(ii) Patiala
(iii) Ludhiana
(iv) Jalandar
(v) Hoshiarpur
(vi) Ferozepur
(vii) Amritsar
(viii) Bhatinda
(ix) Talwara
(x) Shahpur

Each TDMA system will serve a radius of approximately 30 to 40 km and, together will provide coverage to all the circle and field offices in the Punjab. About ten TDMA systems will be needed. Each TDMA system can have up to 128 subscribers, thus ten systems will provide 1280 connections for the Irrigation service.

Cost and Phasing of Program

6. An amount of Rs 63.7 M has been provided for ten TDMA systems. The program will be phased to bring in about two complete TDMAs each year.

INDIA

PUNJAB IRRIGATION AND DRAINAGE PROJECT

Drainage Component

Introduction

1. Large scale development of surface water irrigation systems was initiated in the Indus Basin during the latter part of the 19th century using run-of-the-river supplies from the major tributaries of the Indus River. By early in the 20th century, much of the plains area of what is now the Indian State of Punjab was receiving surface water irrigation through diversions from the Sutlej, Beas and Ravi Rivers. However, provision was not made for evacuating surface water surpluses by construction of drains. In fact, the already poorly defined natural drainage was made less effective by the superpositioning of irrigation, road and rail infrastructure and the development of farmland by the settlers across the natural micro-drainage.

2. The impedances imposed on the natural drainage had little negative impact on agricultural production in the irrigated areas during the first half of the present century, due to the high infiltration rates of the soils, the availability of a large unfilled reservoir in the groundwater system to receive infiltration, and the relatively low rainfall on much of the area. But flooding from the large rivers and spate streams debouching from the Himalaya was a recurring problem. However, the introduction of surface water irrigation and the creation of surface water drainage impedances on an extensive area caused a positive change in the groundwater balance in the area. The groundwater system was unable to dispose of all the additional recharge by natural outflow, and the surplus was taken into groundwater storage. This resulted in a progressive rise of the water table beneath the gross area under irrigation. This had no impact on agriculture until the water table had risen to within 2.0 m or less from land surface, which was not a common phenomenon in the first half of the century, except in the vicinity of large unlined canals.

3. In the decade after independence, the water table rose to near land surface and water logging conditions developed in extensive areas of the plains of northeastern and central Punjab. Deprived of the groundwater reservoir to accept infiltration, flooding increased on lands which had previously not been subject to this hazard. In 1963, the Government of Punjab undertook a regional surface water drainage and flood control project with the assistance of the World Bank. The drainage works were concentrated in the northeast and central parts of the State where the drainage problem was then most acute. Only a network of master drains was provided in the southwestern part of the state. The development of the surface water drainage system in the northeastern and central parts of Punjab, together with intensive development of groundwater for irrigation by the private sector (which incidently, provided vertical drainage) have removed the water logging and associated flooding hazards.

4. Meanwhile, in the southwestern part of the State (where the water table was originally deeper than in the northeast and center) the water table was still rising. In this area, most of the groundwater is of poor quality, unsuitable for irrigation, and the prospects for private groundwater development are very limited. Water logging first became evident early in the 1970's and there has been a progressive extension of the area with dangerously shallow water table depth in the subsequent period. It is estimated that the gross area with a water table at a depth of 1.5m or less at the end of the monsoon is now about 200,000 ha. The area covers parts of Ferozepur, Faridkot, Bhatinda and Sangrur Districts. The gross area underlain by poor quality groundwater (and therefore at risk from water logging) is estimated to be about 650,000 ha. A survey of the above districts in 1987 indicated that about 17,000 ha of land in scattered pockets have been completely abandoned because farming had become impossible due to water logging.

5. The drainage component of the project would address the drainage problem in southwestern Punjab by:

(a) reconditioning and improving the existing master drainage system;

(b) construction of link drains outfalling into the master system from areas of surface water drainage congestion;

(c) construction of toe drains by connecting borrow pits along selected major canals with high seepage losses which cause local water logging, the toe drains outfalling to the master drains; and

(d) initiating reclamation of the 17,000 ha of abandoned water logged land (which cannot be treated by surface drainage improvements due to drain depth limitations) by installing sub-surface pipe drainage systems.

A. Surface Drainage Works

Scope of Work

6. The surface water drainage system under consideration covers a gross area of about 1.0 M ha, but the proposed works aim specifically at improved drainage for an area of 200,000 ha of water logged land in the districts of Ferozepur, Faridkot, Bhatinda and Sangrur (Map IBRD 21802). The work involves:

a) reconditioning and improving 1,693 km of existing drains, including provision of appropriate crossings, bridges and cross drainage structures;

b) construction of 136 new link drains of total length 795 km to connect depressions and other areas of drainage congestion (totalling 62,000 ha) to the main drains; and

c) linking the borrow pits to form toe drains along reaches of the (i) Rajasthan Feeder Canal; (ii) Sirhind Feeder Canal; (iii) Ferozepur Canal and (iv) Bikaner Canal with a total length of 519 km, and connecting them to the main drainage system.

Design criteria for the Drainage System

7. Main System The regional drainage system is designed to evacuate the run off generated by a three-day storm in three days from an area of about 10 km^2. An area attenuation factor applied to larger catchments which progressively reduces the design runoff coefficient inversely with the increased area. The design capacities for surface drainage channels are shown below for a series of catchment areas:

Design capacity of drain

Catchment area (km2)	Total capacity (m^3/s)	Capacity/ha (l/s/ha)
10	1.90	1.90
20	2.46	1.23
30	3.03	1.01
75	5.48	0.73
125	7.13	0.57
2,500	142.50	0.57

8. The design criteria follow the Indian Standard code and are closely in accord with international standards for design of drainage systems on agricultural land in this type of climate and soil conditions. Cross drainage and other structures associated with the drains are designed for a three day storm with a 50 year return period, apart from district road and railway bridges which are to be designed by the particular authorities involved to Indian standards for such structures.

9. Toe Drains The toe drains will be designed according to the estimated seepage losses they are expected to intercept along the canal reach on which they are located. Care will be taken to minimize induced seepage losses by setting the toe drain invert at as shallow a depth as is feasible. As the water may be expected to be of good quality after the drains have run for a short time, arrangements may be made for recovering the outflow for use rather than discharging it to the main drainage system.

Implementation Schedule

10. The surface drainage component is scheduled for completion over a five year period. The total cost including administration and engineering supervision, and maintenance of works during construction is summarized in Annex 37.

Buildings, Vehicles and Equipment for Construction

11. Buildings, including staff accommodation, offices and temporary stores will be required for implementation of the project. The total estimated cost of buildings in 1989 prices is Rs 3.22 M.

12. It will be necessary to procure a relatively small amount of vehicles,plant and office equipment. The total estimated cost of these items in 1989 prices is Rs 24.26 M.

Maintenance of Drains

13. The Drainage Department has prepared a routine maintenance plan for the drainage system to be constructed under the project. The plan includes the engagement of a permanent labor force for general light maintenance, removal of heavy weed growth by special labor gangs or using draglines, and mechanical desilting of drains. The drains have been divided into three categories for estimating maintenance requirements: (a) drains requiring desilting and reconditioning every year; (b) drains requiring desilting once in three years; and (c) drains requiring reconditioning every six years. The five year plan reflects the expected build-up of the drainage system over the life of the project from 1,693 km of drain length at the start of the project to 2,488 km at completion. The toe drains are not included as these will be maintained by the canals organization.

14. The drainage maintenance plan indicates that the works could be carried out without increase in staffing above Class IV category (permanent labor). However, additional plant would be required above that already available. The estimated cost of this equipment in 1989 prices is Rs 12.5 M.

B. Sub-surface Drainage Works

Background

15. A survey of the districts of Ferozepur, Faridkot, Bhatinda and Sangrur in 1987 indicated that some 17,000 ha of land had then been abandoned for agriculture. These lands lie in scattered pockets in the bottoms of broad valleys and range in area from about 40 ha to more than 500 ha. However, it should be noted that the water table continues to rise in a gross area of about 650,000 ha and assuming only the lower lying areas of the broad swales become very seriously water logged, a considerable expansion of the area requiring drainage treatment may be foreseen. Moreover, land should be treated for water logging before it becomes so badly deteriorated as to be abandoned, thus requiring expenditures on land reclamation in addition to the cost of drainage.

16. The areas which are extremely water logged generally lie in the bottoms of shallow closed basins which cannot be drained effectively by surface channels as the grade to the outfall is limited. This limits the depth to which the open channel can be taken while maintaining an outfall gradient.

Pilot Subsurface Drainage Area

17. A pilot area of buried PVC pipe drainage was constructed on 300 ha in 1986/87 as a Research Study under the Punjab Irrigation Project (Cr IN-893). An area of 100 ha has perforated PVC laterals set at a depth of about 1.0 m outfalling directly into an open drain. The remaining 200 ha have laterals set at about 2.0 m depth and outfalling into a pipe collector from where the drainage effluent discharges to a sump and is then pumped to an open drain. The laterals of 150 mm diameter rigid PVC pipe were perforated and then wrapped in rot-resistant fabric before being set in the ground in a gravel shroud at the selected depth to maintain an outfall gradient. In the case of the 200 ha area with pumped water evacuation, the collector is a 200 mm

diameter rigid PVC pipe which outfalls into the sump. Brick-built inspection pits were installed at 200 m intervals on the laterals in both areas and at the junctions with the collector on the 200 ha area.

18. The area selected for the pilot development was extremely water logged, had been abandoned for about 15 years and had acquired a dense growth of bullrushes. Despite the fact that the construction was done under very adverse conditions (using inappropriate equipment and requiring dewatering to lay the pipe), and using the only available PVC pipe material (which had to be adapted for drainage use), the work was completed successfully and drained the land to a minimum depth of 1.5 m in the 200 ha area and to a minimum depth of 0.75 m in the 100 ha area.

19. Since 1987, the owners of the previously derelict land have progressively extended reclamation. At present, 95 ha of the 300 ha pilot area are being cultivated. However, it is clear that reclamation of such badly deteriorated land involves inputs which are beyond the means of many of the almost destitute land owners In particular, manual removal of bullrush roots has proved to be expensive. The costs to the farmers are indicated below:

Cost Estimate for Reclamation of Deteriorated Land

Item	Description	Cost/ha (Rs.)
1.	Clearance of bullrush cover and roots manually	2,500
2.	Repeat ploughing (4 passes)	1,000
3.	Labor working behind tractor plough (32 man days)	960
4.	Land levelling with tractor	1,680
5.	Gypsum treatment for alkalinity	1,500
	Total	**9,350**

Note: arrangement must be made for leaching water

20. Provision will be made under the proposed project for tearing up roots by one or two passes with a deep set cultivator behind a tractor as a project cost. This would replace items 1 and 2 above.

21. The effluent from the sump on the 200 ha areas has had EC values in the range of 2000-3000 µmhos/cm for the past two years. This water could probably be used for leaching and might be used for irrigation in conjunction with surface water. The outflows from the 100 ha area have EC values around 6,000 µmhos/cm and must be discarded to drainage.

22. The success of the pilot area has prompted GOP to include a component for sub-surface drainage by buried pipe systems in the project. A pipe laying machine will be procured from abroad. The machine is capable of trenching, laying pipe, installing a gravel pack and backfilling as a continuous process with pipe depths up to about 3.0 m. The flexible, corrugated PVC pipe material required for use with the machine is now manufactured in India.

Scope of Works

23. There are 17,000 ha of essentially derelict land due to waterlogging (and a growing area which will need treatment). The project will support construction of sub-surface drainage on 5,000 ha on a pilot basis, after which the performance of the technical and economic performance of the system will be assessed. On the basis of this assessment, the future program will be established. The machine to be procured could cover about 4,000 ha/yr in the hands of a skilled operator. The GOP implementation program allows one year to procure the pipe laying equipment and then envisages installation of sub-surface drainage systems on 1,000 ha in year 2 and on 2,000 ha in each of years 3 and 4.

24. The Drainage Department has identified about 5,000 ha of very badly deteriorated land due to water logging which will be treated under the project. The land is distributed in 41 scattered pockets of sizes ranging from 40 ha to 413 ha (Map IBRD 21802).

Design Criteria for Subsurface Drainage System

25. Basic Design. The systems have been designed with lateral drainage pipes set at a depth of about 2.0 m with a spacing of 150 m. In general, laterals will extend 750 m to either side of a collector drain which will outfall to a sump from where the effluent will be pumped to an evaporator/fishpond. Water surface slopes in pipelines will be on gradients of 1:5000. The laterals will be of 100 mm diameter perforated, corrugated PVC pipe. The collectors will be of similar material of 150 mm and 200 mm diameters, depending on the area under the drainage system. The pipes will be shrouded with graded gravel, but experiments will be carried out with pipe which is pre-covered with a man-made fibre filter to test whether this is technically equal to a gravel shroud and can be installed at lower cost. Inspection manholes will be provided at 250 m intervals along the laterals and at the junctions of laterals with the collector(s). The sump will be a brick lined circular structure of about 3.0 m diameter and 2.5-3.0 m deep, with a concrete floor. Electrically powered centrifugal pumps will be provided as standard for effluent evacuation, with a number of diesel powered centrifugal pumps on standby in Drainage Department Stores. Housing for the pump operators is included in the cost estimate.

26. Design Drainable Surplus The average rate of water table rise in the region of 0.5-1.0 m/yr indicates a drainage requirement of 50-100 mm of water per year from the regional surface. This translates into an average drainage requirement of 0.016-0.032 l/s/ha on the gross area. However, with the development of the water logging in valley bottoms, such areas become drainage sinks for the surrounding higher land. They may actually be disposing by evaporation of the drainable surplus from an area two to four times larger than the water logged area. This must be taken into account when estimating the quantity of effluent which will be produced from any given subsurface drainage area. Moreover, allowance must be made for peak outflows from the system which would occur due to heavy rain or irrigation applications. It is considered that the design discharge from the drainage system should be taken as about 0.1/s/ha. The pipe systems as designed are capable of handling such unit area discharges.

27. Evaporation/Fish Ponds It is planned to dispose of all groundwater drainage effluent within the project area through evaporation ponds. It is

also planned that ponds will be used for fish culture. An ongoing experiment shows that carp can be raised successfully using a water source with EC of about 4,000 µmhos/cm (taken from a tubewell to a one acre pond at Khuranj). What still remains uncertain is for how long the fish culture will be successful with increasing water salinity in the pond. It must be accepted that the prime function of the pond is to dispose of water by evaporation and to store salt, and that fish production is a possible secondary benefit.

28. Calculations indicate that evaporation ponds can provide a mechanism for disposal of the water component of the drainage effluent and can store salt for up to 20 years without loss of evaporation rate due to salt concentration through time (see Appendix 1). However, the area committed to evaporation ponds will be large. Assuming that a tile drainage area on a valley bottom effectively drains three times its area of surrounding land, and that the regional drainage requirement is in the range of 0.016 - 0.032 l/s/ha (para 24), 12-24 ha of ponds could be required to dispose of the drainage effluent from 100 ha of treated area collecting from a total area of 400 ha. In this respect, the measured outflows from the 200 ha pilot area, which range from about 4 l/s to 7 l/s (0.02-0.035 l/s/ha on the drained area) may be misleading. The area still carries a thick cover of bullrushes on about 135 ha, which are functioning as pumps and probably transpiring about two thirds of the drainable surplus.

Implementation Schedule and Cost Estimate for Subsurface Drainage Works

29. The groundwater drainage component is scheduled for completion over a four year period. The total cost of the works in 1989 prices is estimated to be Rs 122..41 M including administration and engineering supervision, and maintenance of works during construction but excluding physical contingencies. The overall inclusive cost for the drainage system is Rs.23,700/ha of which about 30% relates to the land and works required for the effluent disposal system by evaporation tanks.

Equipment

30. The only major item of equipment to be procured is the pipe laying machine at an estimated cost of Rs 4.8 M in mid-1989 prices. The machine has a life of 15,000 hr. of operation, or 10 years at 1500 hr. operation per year. Depreciation and maintenance of the machine has been included under the cost estimate for construction of the pipe drainage system.

Land Reclamation

31. As noted under para 19, reclamation of the badly deteriorated land presents difficulty to the land owners, particularly with regard to root clearance. A provision will be made under the project for ripping up the root of bullrush using a crawler tractor fitted with a heavy duty cultivator. The estimated cost for this work is Rs.3,000/ha.

Materials Procurement

32. The major materials procurement item is corrugated PVC drainage pipe. Estimated pipe requirements are as follows:

Item	Description	Unit	90/91	91/92	92/93	93/94	94/95	Total
1.	200 mm pipe	m	-	10,600	21,200	21,200	-	53,000
2.	150 mm pipe	m	-	5,300	10,600	10,600	-	26,900
3.	100 mm pipe	m	-	70,000	140,000	140,000	-	350,000

Note: all pipes of corrugated PVC.

OPERATION OF EVAPORATION PONDS

Introduction

1. The use of evaporation ponds to dispose of the water in the saline drainage effluent, and to collect the salt for disposal, is an interim solution to the effluent problem, proposed to parallel the execution of the pilot sub-surface drainage works. Studies are also underway in relation to the long term solutions to the drainage problems of the region, of which evaporation ponds are one of several solutions to be considered. This pilot system will provide valuable information for the broader study.

Assumptions for Calculations

2. The following assumptions are made for computing water and salt balances in the pond.

a) Effective area of pond for evaporation - 20,000 m2 (2.0 ha)

b) Depth of water at FSL - 2.0 m.

c) Evaporation from water surface - 1,825 mm/yr with 186 mm in December-January (62 days), 236 mm in February-March (59 days), 366 mm in April-May (61 days), 427 mm in June-July (61 days), 366 mm in August-September (61 days) and 244 mm in October-November (61 days).

d) Rainfall on pond - 350 mm/yr with 20 mm in December - January, 20 mm in February - March, 10 mm in April - May, 100 mm in June - July, 140 mm in August - September, 60 mm in October-November

e) Pond is full on 1 April and returns to FSL on 31 March.

f) Flow rate of incoming drainage water is constant.

g) Dissolved solids in drainage component is constant at 2,000 ppm.(2 kg/m3).

h) Seepage losses from pond are negligible.

Pond Water and Salt Balances

3. As there is no change in storage from 1 April to 31 March, the pond would dispose of water as follows:

Total annual evaporation (1.825 m on 20,000m2)	=	36,500m3
Assumed annual rainfall on pond	=	7,000m3
Balance to dispose of drainage effluent	=	29,500m3

The pond is able to dispose of 29,500m3/yr of drainage water at an average inflow of 0.9351/sec. Estimated drainable surpluses are in the range of 0.01591/sec/ha (50mm/yr) to 0.0321/sec/ha (100mm/yr). The pond could

inflow of 0.9351/sec. Estimated drainable surpluses are in the range of 0.01591/sec/ha (50mm/yr) to 0.0321/sec/ha (100mm/yr). The pond could therefore dispose of the drainable surplus from 29.5-59 ha.

4. Pond Water Balance Assuming drainage water inflow constant at 0.9351/sec or 4.04 mm/day, the pond water balance over the year would be as follows with no change in storage:

Period	Incoming water		Outgoing	Change in pond level	
	Drainage	Rain	Evaporation	In Period	Cumulative
	mm				
April-May	246.44	10	366	-109.56	-109.56
June-July	246.44	100	427	-80.56	-190.12
Aug-Sept	246.44	140	366	+20.44	-169.65
Oct-Nov	246.44	60	244	+62.44	-107.24
Dec-Jan	250.48	20	186	+84.48	-22.76
Feb-March	238.36	20	236	+22.36	-0.4*

* rounding error

5. Pond Salt Balance It is assumed that the pond is initially filled with drainage water containing 2,000 ppm dissolved solids. The added drainage water imports 59,000 kg of salt annually to the pond which increases the dissolved solids in the water by 1,475 ppm each year at 31 March. Thus, if the water is held in the pond over a series of years without exporting salt, the salinities will increase as follows:

Start of first year	-	2,000 ppm
End of first year	-	3,475 ppm
End of third year	-	6,425 ppm
End of fifth year	-	9,375 ppm
End of tenth year	-	16,750 ppm

6. Calculated water and salt balances for bimonthly periods are tabulated below:

Pond Water Balance - Bi-monthly

Date	Total Salt in Pond (Kg)	Water Volume Meter3	Salinity (ppm)
First Year			
1 April	80,000	40,000	2,000
31 May	85,858	37,809	2,377
31 July	99,716	36,198	2,755
30 September	109,574	36,607	2,993
30 November	119,432	37,855	3,155
31 January	129,451	39,545	3,274
31 March	138,985	40,000	3,475
Sixth Year			
1 April	375,000	40,000	9,375
31 May	384,858	37,809	10,179
31 July	394,716	36,198	10,904
30 September	404,574	36,607	11,058
30 November	414,432	37,855	10,948
31 January	424,451	39,545	10,733
31 March	433,985	40,000	10,850

Conclusions

7. The following conclusions may be reached from the foregoing calculations:

a) Evaporation ponds located within the irrigated area could provide a mechanism for disposal of the water component of the groundwater drainage effluent, but the salt component would be concentrated in the ponds from where it would have to be eventually disposed of.

b) If the raw groundwater effluent is of a similar salt concentration as the assumed for the calculation (2,000 ppm), the evaporators could be expected to function, continuously accumulating salt, for more than 20 years without significant reduction of the evaporation rate from the pond surface.

c) The chemical composition of the pond water would change through time as less soluble salts were precipitated - this would require further study if the ponds were intended to accumulate salt over a long period.

d) The efficiency of the ponds for disposal of effluent is a function of the area of the water surface, the evaporation rate and the rainfall on the surface, and the rainfall input can vary over a wide range.

e) The area of land required for evaporation ponds would be large. Assuming that tile drainage system on a water-logged area effectively drains an area four times as large, in the range of 12-24 ha of ponds would be required to dispose of the effluent from 100 ha of area provided with tile drainage.

f) The evaporator ponds would have to be designed to minimize seepage back to the groundwater system. Any design which permitted significant seepage would imply recirculation through the drainage system. Thus, an

unlined pond water level would have to be at or about the level to which the surrounding land is to be drained. An alternative would be to install plastic lining if fish culture demands the ponds are not in deep cut, if this operation otherwise would be successful.

g) Any proposal to utilize the ponds for fish culture would have to examine the progressive changes of water quality in the ponds.

INDIA

PUNJAB IRRIGATION AND DRAINAGE PROJECT

Kandi Canal

Introduction

1. The Kandi Canal system is served from a headworks on the left bank of the Mukerian Hydel Channel, which by-passes a large loop on the Beas River to generate power at three drops. The Kandi main canal capacity at its head is 14.2 m^3/sec of which 6.9 m^3/sec are allocated to Phase I of the development with the main canal extended to km 59.2, leaving 7.3 m^3/sec to serve the command of an extended main canal under Phase II.

2. Construction of Phase I was initiated in 1978/79, but progress has been slow due to the slow rate of funding. Work has been concentrated on the main canal. Out of 59.2 km of main canal, about 38 km has been constructed, and 28 cross drainage structures, one cross regulator and one escape have been completed. The main canal is now complete to km 23, but irrigation water can be distributed to only about 1,500 ha through one distributary and a number of direct outlets from the main canal. It is estimated that the balance of works to complete the Kandi Canal system would cost about Rs 421 M in 1989 prices with allowance for physical contingencies.

The Project Area

3. The command area of the Phase I of the Kandi Canal Project lies on the lower part of the Kandi Zone (a piedmont region below the foothills of the Himalaya) and is a narrow, northwest by the southeast oriented strip lying between the main canal and the Hoshiarpur-Dasuya road (Map IBRD 21801). The gros· command area is 24,650 ha of which 19,720 ha (80%) will be served with irrigation. The mean annual rainfall is in the range of 900-1000 mm, of which about 85% occurs during the monsoon season from mid-June to mid-September. The soils are mainly sandy loam or loamy sand, and are very well drained. About 50% of the area has land slopes of 0.5-1.0%, 40% has slopes of 1-3% and the balance has slopes of 3-5%. The area is crossed by numerous spate streams (choes) which debouch from the Himalaya foothills. Most of the proposed command area is now rainfed, but there are a number of tubewells under private ownership, mainly in the eastern part of the command where groundwater levels are shallower.

Water Availability and Allowances

4. ⌐ e water supply for the Kandi Canal Project will be taken from the 474 MCM earmarked as the annual supply for the 'Project of Extension and Improvement of the Shah Nehar Canal System' of which the Kandi Canal Project is an independent component. Phase I of the Kandi Canal Project was originally allocated 132 Mm^3, and Phase II was allocated 148 Mm^3. At that time, it was intended to irrigate 19,720 ha under gravity from the Phase I Main Canal and 9,990 ha through three lift schemes taking off from the canal. During project preparation, it was agreed that the lift schemes would be deleted and much of their ⌐roposed command area would be supplied from the Low Dams and Public Tubewells Projects to be financed under this project (see

Annexes 8 and 9). Thus, the water allocation required for the gravity irrigation under the Phase I Kandi Canal project is 88 Mm^3.

5. The design water allowances at the heads of the distributaries is 0.25 l/s/ha, and 0.21 l/s/ha at the heads of the outlets to chaks. As the reach to km 23 and parts of the lower reach of the Kandi main canal has been constructed, these capacities are essentially fixed. However, more than two thirds of this capacity will not be required even when Phase I works are completed.

Design Characteristics

6. Main Canal. The Kandi main canal has been designed as a contour canal with a bed slope of 1:9,524 in the head reach and 1:8,333 to 1:7,143 in the lower reaches. The completed trapezoidal sections are lined with single brick lining over 1:3 cement sand mortar. The new sections will be constructed with the new cup-shaped design section and lined to accepted GOP standards (see Annex 2). The existing works will be renovated as required. Field inspections indicate that the constructed works are generally in good condition.

7. Main Canal Structures. There will be seven distributary outlets with gated head regulators and 43 direct outlets to chaks along the Phase I main canal. Provision is made for three cross regulators, one tail regulator and three escapes, of which one cross regulator and one escape have been constructed. A total of 91 cross drainage works are required, of which 45 have been constructed. The completed canal will have 10 village road bridges, two foot bridges and one railway bridge.

8. The main canal has been designed for water level controlled flows to the distributary heads and direct outlets. However, the capacity of the canal is over twice what will be required at full development of the Phase I. Moreover, increased diversions will be required through the construction period of the Phase I as elements are completed and demand water. Given the low bed gradients, it would be possible to control levels in the canal for deliveries to the offtakes by operating the gates of the proposed cross regulators. However, the same result could be obtained passively by installing duck-billed weirs (long crested weirs) at the same locations as the proposed gated cross regulators. The weirs would incorporate a sluice gate to flush any silt accumulation. The design section of GOP ID is studying the possible use and design of duck-billed weirs with a sluice gate as a possible alternative to gated cross regulators. The proposed escapes will have to be gated to drain the canal for maintenance, but the tail escape could be designed as a fixed head structure.

9. Distribution system. The distributary and minor canals will be fully lined. The water courses will be lined to about 5.0 ha blocks, giving an average density of lined water course of 37.5 m/ha. The lining of these channels will be to accepted GOP standards (see Annexure 2 for details). The canal system will turnout to chaks of about 100 ha. About 25% of the outlets will offtake directly from the main canal (due to the configuration of the command area and the topography), with the balance 75% offtaking from distributaries and minors. In addition to the gated head regulator on the distributaries, the canal structures include outlets to the traditional

adjustable proportional module (APM) design, falls, cross drainage structures and road bridges. Culvert crossings will be provided at about 500 m intervals on water courses. Manually operated slide gates will control offtakes from the water courses to permit rotational water supply deliveries according to the warabandi system within the chaks.

Drainage and Flood Protection

10. The command area lies on moderately steep slopes and the natural drainage system is well developed. Thus, no enhancement of the natural drainage is required for land drainage. However, the spate streams which cross the project area are subject to flash flooding, and some flood protection works are required. It should be noted that the low dams, which are to be constructed in the Kandi zone as another component of the project (see Annex 8) , will provide flood protection to the Kandi Canal system.

Implementation Schedule and Cost Estimates for Completion of Works

11. Table 1 shows cost estimates for the works remaining to complete the Phase I Kandi Canal Project as of March 1989, in 1989 prices, and indicates the annual funding requirements to complete the project in the period to 1994/95. As the costing in 1989 prices is not inclusive of physical contingencies, appropriate contingencies are indicated on the table. The total cost of the remaining works in 1989 prices with physical contingencies is Rs. 420.0 million.

INDIA

PUNJAB IRRIGATION AND DRAINAGE PROJECT

Kandi Low Dams

Background

1. The Kandi includes all the land within the Punjab Siwalik Hills together with a narrow band of colluvium which lies immediately below the hills and to the east of the highway which runs from Chandigarh in the southeast through the towns of Ropar and Hoshiarpur to Dasuya in the northwest. Kandi area lies mainly within the administrative districts of Hoshiarpur and Ropar, covers an area of 4600 km2 (about 9% of the Punjab state) and contains 6% of Punjab's population.

2. The constraints to agricultural development are mainly the uneven distribution, in time and space, of the rainfall and topographical and soil limitations. Flash floods cause soil erosion and flood damage and extended periods of drought mitigate against advanced agricultural techniques.

3. To overcome these constraints, an integrated development program, the Kandi Area Development Project (KADP),was started in 1980 (Ln 1897-IN). The main components were:

(a) afforestation of the catchment areas to reduce the sediment load and peak flows;

(b) provision of check dams, land levelling and contour bunding in the catchment areas; and

(c) construction of 10 dual purpose irrigation and flood attenuation dams.

In addition to these three main components the project had several subsidiary components including a cattle exchange program, development of fisheries, cottage industries, and horticulture. When the KADP closed on 31.12.88, only three of the planned small dams had been built.

4. The present project contains three components to support irrigation development in the Kandi Zone:

(a) groundwater development for irrigation using deep tube wells wherever aquifer characteristics are suitable and the groundwater balance permits;

(b) completion of the Kandi canal system for diversion of its allocated surface waters, for irrigation; and

(c) the construction of 13 small dams in the Kandi area itself for the dual purpose of flood control and irrigation.

The Kandi Dams

5. There are 21 major and 120 smaller spate rivers that discharge from the Siwalik foothills into the plains of the Punjab. There are 31 promising dams sites on these rivers which could provide irrigation to about 22 000 ha of CCA in the Kandi area. The annual run-off from the area is about 85 Mm3. Of the 31 prospective dam sites, three have been developed under the Kandi Watershed and Development Project (para 3), at Dholbaha, Janauri and Maili. The construction of a further 9 dams and completion of preparatory designs for 4 more are proposed under the project. The total base cost is Rs 277 M (Annex 13, Table 11). Table 1 summarizes the main features of the dams to be built in this project.

6. Dams are planned to be constructed are at Perch, Sconk, Siswan, Mirzapur and Haripur in Ropar District, and at Thana, Ramtatwali, Malot, Damsal, Arniala, Chohal Saleran and Lalwan are in Hoshiarpur District (Map IBRD 21801).

7. Topography The project area can be divided into two zones, the foothills zone and the piedmont zone. The foothills zone to the north and northwest bounds with Himachal Pradesh and to the south east with Haryana. Ground slopes are steep, and the elevation ranges from 450m to 750 m. The piedmont zone lies below the foothills zone. The terrain is somewhat undulating and incised but the slopes are milder than in the foothills. The piedmont forms the northern fringe of the Indo-Gangetic plain, and altitudes vary from 320m to 450m.

8. Geology The deposits now constituting the Upper Siwaliks in the Punjab have been affected by the latest Himalayan series of upheavals by which they have been folded, faulted and elevated into the outermost foothills of the Himalayas. The major faults in the Upper Siwaliks are of great significance as these generally mark the weaker zones along which major rivers like the Sutlej and Beas have pierced the Siwaliks. The major geological structures in the Siwaliks are the Janauri anticline and the Bhaddi anticline. The Janauri anticline plunges to the northwest and disappears under the alluvium of the river Beas. The anticline has been formed by thrust faults in the Basement which have not emerged through the cover of the Upper Siwaliks. The edge of the southwest limb of the anticline, on which most of the low dams in Hoshiarpur District are situated, consists of beds of Upper Siwalik strata dipping steeply downstream. The dip decreases rapidly upstream, and in the upper half of the watersheds, the beds are almost horizontal. The northeast limb facing the Soan and Sutlej valley has a generally milder dip. The axis of the anticline roughly follows the watershed divide.

9. The Pinjore Stage of the Upper Siwalik Formation comprises banded sandstones, clay shales and siltstones. The sandstones are generally medium to coarse grained, current bedded and friable with a weak calcareous cement. The clay shales and siltstones are generally massive and compacted but are largely uncemented. They often contain plastic clay seams parallel to the bedding, which have a low shear resistance, particularly when saturated.

10. Hydrology. The Kandi area and its surroundings have a hydrometeorological network including about 60 daily rain gauges, nine

autographic rain gauges (four at meteorological stations) and 54 run-off gauging stations. Some of the gauging stations are equipped for making sediment discharge measurements. Of the daily rain gauges, about 40% are observed only during the monsoon (June-September). The density of gauges is about 180 km2 /gauge which is considered adequate to describe the area variability of seasonal and annual rainfall. Flow gauging at 33 rivers was started in 1977 and subsequently extended to cover 54 rivers. Most of the rivers are gauged during the monsoon period from July to September. All the 13 rivers, which are proposed for dams in this project, are being regularly gauged. Suspended sediment observations are being made regularly at 17 stations including all 13 watersheds where dams are proposed. Sediment data for 10 years or more are available at most of these stations.

11. Vegetation. The vegetative cover in the catchment areas has been studied intensively and classified into four categories:

(a) Category 1: good tree cover (50%-75%) with good bush and grass cover;

(b) Category 2G:intermediate tree cover (25%-50%) with good bush and grass cover

(c) Category 2: intermediate tree cover (25%-50%) with intermediate bush and grass cover;

(d) Category 3: poor tree cover (25%) with poor bush and grass cover.

12. About a century ago, the Siwalik hills were covered with thick forests of acacia and pine trees, but unrestricted tree felling and overgrazing, particularly near the villages, destroyed much of the cover. The Punjab Government, with the aid of the Bank, has started a reforestation program along with soil conservation measures to restore the environment. Most of the project area has already been treated or is under treatment. Full cooperation will be maintained with the proposed Watershed Development Project now being appraised.

13. Soils. The command areas of the proposed dams are situated partly in the fringes of the Siwalik hills where along the valley floors there are remnants of alluvial terraces with sandy loam to loam soils, and partly in the alluvial soils of the piedmont zone. The piedmont soils are typically deep and well drained, occur on moderate slopes and are subject to slight to moderate erosion problems. These soils are usually non-calcareous. Except in some parts of the flood plains of the larger rivers, almost all the cultivable area in the Kandi tract has been brought under cultivation. These light soils require assured irrigation to provide high yields.

Dam Technology

14. Flood Hydrology. Design flood hydrology is based on the synthetic triangular unit hydrograph method and the rainfall intensities of the corresponding return periods. The catchments are small and steep, so short duration storms are critical. A 1955 storm was adopted as the standard project storm. This event was quite severe (about 500 mm in 24 hrs) with a return period of about 1000 years. It was widely spread, covering most of the

districts of the Punjab from Gurdaspur to Bhatinda. The daily precipitation has never been equalled or exceeded in any part of the zone. The design storm was transposed to the various watersheds of the Kandi area, and a correction for dew point and average height above mean sea level applied. The PMF was estimated by increasing the precipitation of the 1955 storm by a factor of 1.45 to maximize the moisture content on the basis of advice from the IMD. For the Maili dam, completed in 1987, the assumptions made in synthesizing the unit graph were confirmed by observations of 14 flood hydrographs recorded between 1975 and 1982.

15. Yield Hydrology. Good correlations were found to exist between the rainfall and runoff for monthly periods during the monsoon (July-September) and the non-monsoon period (October-June). Long term rainfall data are not available for all the watersheds. Where data was not available the adjacent stations at Hoshiarpur, Chandigarh, Jaijon, Dholbaha, Garhshankar and Ropar were used. An estimate is made of the expected yield reduction from the catchment when the reforestation and catchment vegetation program is completed.

16. Sedimentation. For most of the catchments, sediment measurements have been made for a number of years by measuring the sediment load during flood periods, plotting the sediment load against discharge, and then calculating the total average sediment load. The annual catchment erosion has been found to vary between 0.1 to 44 mm. Dead storage in each dam will be provided to give a life of at least 50 years.

Dam Design

17. The site investigation includes engineering geological exploration holes at a sufficient density to prove the soundness of the site from both the structural and hydraulic aspects. Particular care is required in the highly deformed formations encountered to examine the possibility of sliding along thin interbedded deposits with low shear resistance, and to prove the water tightness of the formations in the foundations.

18. The dam heights have been fixed by simulation studies using the generated run-off for about 40 years. The criteria will be provision of sedimentation dead storage for at least 50 years and irrigation service without stress for 4 years out of 5

19. Ungated fixed crest spillways would be provided with a capacity sufficient to route the project flood with a 2m freeboard and the PMF with a 0.3m freeboard.

Dam Safety Panel

20. A Dam Safety Panel was formed for the KADP in 1979 and has met 32 times in the period 1980-88 to review all aspects of work on the three dams constructed under that project. Records of their meetings and recommendations are on file. The panel includes a hydrologist, an earth dam specialist and a geologist, none of whom have been connected with the project. The arrangements will be continued for the current project. Terms of reference will be agreed with GOP.

Irrigation Service Requirements

21. Over most of the dam command areas, the most usual seasonal crops are wheat, gram and mustard in the rabi and maize, bajra and groundnut in the kharif. Small areas are under pulses, cotton and oil seeds. Rice is only grown in the valley bottoms and not on the freely draining soils.

22. The design cropping pattern assumes that wheat will continue to be the major irrigated rabi crop. During the kharif, maize, pulses and oilseeds will dominate. There has to be a ready supply of good quality fodder as all livestock owners are not necessarily landowners. Since the predominant rabi fodder crop, berseem, has a high irrigation requirement for full yield development, it is proposed that equal emphasis be placed on improving the yield of kharif silage fodder crops.

23. Water Requirements Penman's method was used to compute crop water requirements for input into the simulation model. The assumed overall irrigation efficiency is 50% for the all-lined system.

24. Water Delivery. The irrigation channels and watercourses will be fully lined. The steep gradients will be exploited to allow the smallest possible channel sections. The systems are gated at the dam and are proportional down to the chak level. No control gates are used below the dam to the chak intakes. The entire system will run either full on or off. A standard farm stream with a duty proportional to the chak size will be delivered to the chak intake whenever the system runs. Distribution within the chak will be by rotation of the farm stream to each holding in proportion to the area of holding.

Implementation

25. The work will be executed by the Kandi Area Development (KAD) Administration under the direction of the Chief Engineer. The feasibility reports for each dam are cleared by a Technical Committee which includes the Departmental Heads concerned (CE(KAD), CE (Canals), CE (Drainage Administration), Director of Agriculture and the Chief Conservator of Forests. For the technical aspects of dam design a report from the Dam Safety Panel is also required. After the feasibility report is approved, detailed project designs and cost estimates are prepared and approved by the GOP. Feasibility Reports are the responsibility of the Directorate of Planning and Design Studies in the KAD Administration. Detailed project reports are done by Superintending Engineers of Construction Circles. In order to ensure uniformity and completeness of the detailed work all reports will be prepared in standard formats.

#	Dam Name	Number of persons to be resettled	Cost Rs/M Base	Height m	Gross storage Tm3	Live storage Tm3	Embnkt volume Tm3	Embk/ Gross Store	Rsvoir area ha	Ctchmt area km2	Spillway width m	SPF m3/s	SPF m3/s /km2	PMF m3/s	PMF m3/s /km2	Spillway capacity m3/s	Irrig CCA ha	Irrig CCA ha	Design Status: Percentage Comple Fess	Hydrol	Geol	Design dam	Design dist
1	DAMSAL		48.81	26.50	6600	5780	262	25	78	23.30	98.25	730.00	31.00	1074.00	46.00	617	2215	1920	100	100	100	100	80
	Under construction																						
2	PERCH		8.85	21.20	1250	950	172	7	24	5.60	2.50	203.00	36.00	311.00	56.00	8	476	300	100	100	100	30	20
	Project estimate approved by GOP, detailed designs will be completed before starting construction																						
3	CHOHAL		29.07	26.00	4400	3694	195	23	53	16.10	21.50	438.00	27.00	660.00	41.00	258	1315	950	100	80	90	10	10
	Project estimates are under sanction																						
4	SALERAN		17.48	26.10	2074	1674	89	23	26	7.20	14.60	207.00	29.00	309.00	43.00	140	695	450	100	30	30	0	0
	Feasibility studies completed for initial site, site being reviewed to reduce resettlement																						
5	*THANA*		*6.00*	*25.30*	*5550*	*4766*	*397*	*14*	*62*	*19.00*	*23.00*	*470.00*	*25.00*	*703.00*	*37.00*	*274*	*2745*	*1660*	*50*	*0*	*0*	*0*	*0*
	Feasibility studies completed but site rejected on geological grounds, alternative site under study																						
6	*RAM TATWALI*		*6.00*	*22.80*	*1460*	*1250*	*100*	*15*	*23*	*5.50*	*6.00*	*156.00*	*28.00*	*·238.00*	*43.00*	*69*	*932*	*450*	*50*	*0*	*0*	*0*	*0*
	Project estimate under preparation																						
7	MIRZAPUR		26.50	21.40	4583	3787	90	51	69	13.90	14.50	441.00	32.00	664.00	48.00	168	1530	970	100	20	80	0	0
8	*MALOT*	·	*6.00*	*26.00*	*5700*	*4932*	*227*	*25*	*64*	*21.00*	*25.00*	*440.00*	*21.00*	*1003.00*	*48.00*	*280*	*2157*	*1380*	*30*	*20*	*0*	*0*	*0*
9	LALWAN		44.93	31.00	2012	1734	234	9	23	9.30	19.50	297.00	32.00	448.00	48.00	227	919	500	30	20	0	0	0
10	SISWAN		33.86	20.70	4460	3755	246	18	67	15.60	19.20	399.00	26.00	1014.00	65.00	191	1350	950	100	20	0	0	0
11	*SOONK*		*6.00*	*17.70*	*1901*	*1519*	*105*	*18*	*36*	*7.10*	*12.00*	*238.00*	*34.00*	*357.00*	*50.00*	*111*	*500*	*415*	*100*	*20*	*20*	*0*	*0*
12	HARIPUR		24.99	20.70	3165	2336	151	21	54	13.70	12.00	368.00	27.00	568.00	41.00	137	715	470	100	20	0	0	0
13	ARNIALA		13.80	20.00	1292	1044	68	19	28	5.80	7.70	149.00	26.00	258.00	44.00	76	474	271	100	20	20	0	0
	TOTAL		248.30		44467	37221	2336										16023	10886					

Notes

(a) All dams are zoned earth fill, with chimney/inclined filter and downstream horizontal drainage blankets

(b) *Preparatory work only for dams shown in italics.*

* Saddle spillway

** Chute spillway

Annex 8
Table 1

POLICY OF THE STATE GOVERNMENT FOR REHABILITATION AND RESETTLEMENT REGARDING PROJECT AFFECTED PERSONS OF LOW DAMS IN KANDI AREA

I. GENERAL

This Rehabilitation and Resettlement Policy covers 13 Nos. Flood Attenuation-cum-Irrigation Dams. These dams are proposed to be constructed in the Kandi Area of Ropar and Hoshiarpur districts in Punjab under the Low Dams Components in World Bank Aided Punjab Composite Irrigation Project Phase II. The construction of these dams and its appurtenant works and creation of reservoirs are likely to cause displacement of some families from these areas.

Not much Rehabilitation and Resettlement is required for these dams in Kandi Area as the number of oustees is quite small. In case of 9 dams, namely Perch Dam, Chohal Dam, Saleran Dam, Lalwan Dam, Damsal Dam, no house/shop of any family and also no public property gets submerged. On the remaining 4 dams, the number of families, whose houses are likely to get submerged are given below:

1. Budki Dam 3
2. Thana Dam 23
3. Ramatatwali Dam 16
4. Haripur Dam8

In addition to the above 50 families, there are some other families, whose part-land holding shall be left unacquired. This will also be acquired if the unacquired land holding is uneconomical. In that case, the Project Affected Families, whose house and uneconomical part-land holding is acquired, may be around 200. It is only after finalization of location, height of dams, the detailed survey of the reservoir area, preparation of land acquisition documents and comprehensive socio-economic survey that the precise number of affected families will be known.

The project affected families will be settled and rehabilitated on houseplots, generally on Panchayat lands (55 hectares available) in the vicinity of their previous habitat without disturbing their social groups. The basic amenities such as roads, schools, electricity supply, water supply and medical facilities, etc., are already available in the villages of resettlement. For this purpose major sons will be considered as separate families.

On the basis of the feasibility reports, the total land likely to be submerged in the reservoir area, including the land required for construction of dams and their appurtenant works would be approximately 900 hectares out of which only 190 hectares is cultivable land. The land holdings in the Kandi Area are very small. More that 50% of the farm sizes are below one hectare and 70% farm sizes are below two hectares. The farmers in general are small and marginal. The average number of family members is five. The rehabilitation of the Project Affected Families is of prime importance to the Government of Punjab, as such, a comprehensive and liberal rehabilitation and resettlement policy has been framed with the following objectives:

(a) The affected families do not receive any set back in the process of their displacement and resettlement.

(b) They acquire a sustainable alternative economic base which is intrinsically equal to or better than what they had in their original habitat.

(c) They are accepted as equal partners in the host community and get harmoniously integrated therein while retaining their identity.

The resettlement and rehabilitation measures for the Project Affected Families have been based generally on the proposed guidelines and package provisions of Ranjit Sagar Dam as discussed with the World Bank Mission for this Project.

II. PROJECT AFFECTED FAMILIES

On the basis of socio-economic survey, the Project Affected families will be categorized as under:

1. Non-residential families.

2. Residential families, whose land only is submerged:

(a) Land from 1-25% submerged.
(b) Land from 26-50% submerged.
(c) Land from 51-75% submerged.
(d) Land from 76-100% submerged.
(e) Part-land left unacquired which becomes uneconomical.

3. Residential families whose land as well as houses get submerged:
   (a) Houses and land from 1-25% submerged.
   (b) Houses and land from 26-50% submerged.
   (c) Houses and land from 51-75% submerged.
   (d) Houses and land from 76-100% submerged.
   (e) Landless oustees whose houses are submerged.
   (f) Houses and land partly acquired and left over is uneconomical.

The Project Affected Persons/Families whose land is being acquired, will receive liberal land compensation. The following categories of Project Affected Families shall be treated as displaced persons for special rehabilitation facilities:

(a) Houses and land from 1-25% of their holding being acquired.
(b) House and land from 26-5-% of their holding being acquired.
(c) House and land from 51-75 of their holding being acquired.
(d) Houses and land from 76-100% of their holding being acquired.
(e) Landless families whose houses/shops being acquired.
(f) Families whose only land above 75% of their holding being acquired.
(g) Families whose part-land is acquired rendering the left-over land uneconomical.

The cut-off date for the purpose of deciding a displaced person would be 1.7.1989.

A displaced person shall mean any person who, from at least one year prior to the date of cut-off, had been ordinarily residing or cultivating land or carrying on any trade, occupation or calling in the area to be affected due to submergence permanently or temporarily or the area required by the project.

III. THE BROAD PRINCIPLES OF REHABILITATION OF DISPLACED FAMILIES

The objectives of the State Government is to ensure that all displaced families would be, after their relocation and resettlement, improved upon their previous standard of living within a reasonable time.

1. ALLOTMENT OF RESIDENTIAL PLOTS

Each oustee would be allotted a plot of minimum size of 200 square meters to a maximum size of 502 square meters depending upon his previous house size. The plots shall be allotted out of the village Panchayat lands close to their habitat.

2. LAND FOR REHABILITATION

In case the Panchayat Land is not available for rehabilitation of the oustee families, land will be acquired at the cost of the Project. The oustees will be allotted a plot size up to 200 square meters free of cost and for any excess area he will be charged reserve price equal to the cost of acquisition of the plot and its development charges. The families who prefer not to settle at a place earmarked for the oustees will be paid the reserve price of 200 square meters of plot, which otherwise is being allowed to him free of cost.

3. FAIR LAND COMPENSATION

The compensation for the land to be acquired would be assessed in accordance with the provisions of the Land Acquisition Act applicable in the State of Punjab which is quite liberal. Under this Act, full market value, plus 30% solatium plus interest up to the date of making the actual payment shall be paid. The Government of Punjab would ensure that full payment of compensation would be made prior to taking possession of land in accordance with Land Acquisition Act of 1984.

4. COMPENSATION FOR HOUSES BEING ACQUIRED

The compensation for the house to be acquired would be assessed in accordance with the prevailing procedure as under:

(i) Current common schedule of rates as applicable to P.W.D. Irrigation Branch will be adopted for the evaluation of

Irrigation Branch will be adopted for the evaluation of houses and other structures.

(ii) The Kacha houses are generally required from day to day by the inhabitants. As such, no depreciation on account of the age may be deducted from the compensation for Kacha Houses of the value below rupees two thousand. This monetary limit may be enhanced to rupees four thousand due to price escalation.

(iii) The compensation of kacha houses of the value of rupees four thousand and above to account for depreciation shall be assessed after making an ad hoc deduction of 12% with marginal adjustments on account of difficulty in determining the exact age of Kacha house beyond five years.

(iv) No depreciation will be made on the assessed compensation of Kacha houses, the age of which is less than five years.

(v) In the case of pucca buildings depreciation at nominal rates will be deducted as under:

(a)	Five years old	Nil
(b)	Next 20 years	1% per annum
(c)	Next 25 years	1/2% per annum
(d)	Next 25 years	1/2% per annum

(vi) No deduction on account of depreciation shall be made for religious places of worship.

(vii) The assessment on the basis of (i) to (vi) above would be increased by 25% in respect of the private houses, public buildings and religious places of worship less than 60 years of age to arrive at the final evaluation for compensation purposes.

5. DISMANTLED MATERIALS

The displaced persons will be permitted to take away the dismantled materials (malba) free of cost and utilize in any manner they like.

6. TRANSPORTATION

It would be ensured that no hardship is caused to the affected families while moving out from their habitat to the place of rehabilitation. The oustees constructing houses at the new sites will be entitled to the transportation charges for their household, livestock and dismantled materials up to a maximum of two truck loads per family on the production of actual receipt, whichever is less.

7. EMPLOYMENT

(a) The employment Exchange of that area will be asked to give priority in employment to the Project Affected Families.
(b) the rural youth of the Project Affected Families will be provided technical skills to take up self-employment in the fields of agriculture, industries, service and business activities.
(c) For landless and non-agriculturist Project Affected Persons, one member of each family will be given employment on the Project in accordance with his capability during the transition period prior to establishing new production systems.

8. CIVIC AMENITIES

Civic amenities will be provided or strengthened in the new settlements as required. The amenities to be provided at each site would be determined by the Rehabilitation and Resettlement Plan Implementation committee. Amenities will be include the following to meet the local requirements:

a. Drinking water well/tubewell with trough
b. Link and approach roads and pacca drains
c. Electricity
d. Dispensary
e. Primary School
f. Panchayat ghar-cum-community hall
g. Cremation and burial grounds
h. Demarcation of pasture land and its improvement, etc.

9. RELIGIOUS PLACES

The places of religious and archeological importance would be reconstructed with consent of concerned persons outside the submerged area of the reservoir at the cost of the project.

10. SOCIO-ECONOMIC SURVEY

A detailed Socio-economic survey of the Project Affected Families of each dam will be conducted separately to evaluate their social and economic status. An expert academician group consisting of a sociologist, an economist and an anthropologist either from Punjab Agriculture University, Ludhiana or any other University of Punjab would be engaged to conduct this survey. The technical and revenue staff of the department will assist them in the job.

The survey will broadly include the information relating to detail of family, caste occupation (Primary and Secondary), type of houses, detail of occupational holdings, livestock size and nature of land holding and ownership of land whether Panchayat or private, his option of alternative occupation. training preference wise, his willingness towards land and houses compensation, etc., and the choice of his place of settlement, etc. Special efforts will be made to find out whether

the partly unacquired land left is economical or uneconomical. Landless cultivators shall also be enumerated.

11. FINANCIAL ASSISTANCE FOR PURCHASE OF LAND AND AVOCATIONS

The project will provide several alternative options from among which affected families may choose for re-establishing their economic productivity.

One option would be for the Project Affected Families to acquire land as follows:

(i) Where affected landowning families are left with non-economic agricultural holdings or no farmland, project beneficiaries in the command area will be contacted by the project authorities to provide land at a fair market price to such affected families.

(ii) Landless families would be provided houseplots in the vicinity of the project command area to enable them to continue in the present occupation.

(iii) Farmers other than marginal are expected to receive sufficient compensation money to be able to purchase farmland. However, marginal farmers who may not retain sufficient purchasing power to buy land will be provided an ex-gratia amount sufficient to bridge the gap between compensation and the cost of land.

(iv) Additional options are provided through existing long-term soft loans on concessional terms for taking up gainful occupations through the Punjab Backward Classes Land Development and Finance Corporation, Integrated Rural Development Programme agencies and the Punjab State cooperative Agriculture Development Bank Limited provide financial assistance for purchase of land and taking up other avocations.

(a) The Punjab Backward Classes Land Development and Finance Corporation - Bankfinco (A Punjab government undertaking) was set up for the uplift of the Backward and Economically Backward Classes and other weaker sections of Society whose income is below Rs 6400 per annum. the Corporation gives financial assistance for the purchase of land, Agriculture Equipment, small scale and village industries, etc. The Financial assistance is given by the Corporation under the following schemes:

(1) Distribution of Loans through Banks

Under this scheme loans up to Rs 10,000 are provided to the beneficiaries except the Scheduled Castes provided with yellow Identity Cards. The loans are arranged through banks with a capital subsidy of 25% to 33%.

(2) Distribution of loans our of Corporation Funds

Under this scheme the loan assistance is provided to the beneficiaries possessing yellow cards whether belonging to Urban or Rural areas.
The rate of interest varies from 0% to 4% up to Rs 30,000/ - and 7% beyond Rs 30,000. The Corporation grants loans for the purchase of agricultural land, residential house or plots, agricultural machinery, dairy farming, poultry farming, piggery, sheep farming, purchase of trucks, cars, petrol pumps, setting up of small scale industries etc.

(b) PUNJAB SCHEDULED CASTE LAND DEVELOPMENT AND FINANCE CORPORATION

The Punjab Scheduled Caste Land Development and Finance Corporation provides loan to the member of Scheduled Castes. The loan is granted against the immoveable property owned by the beneficiaries, for purchase of agricultural land, dairy farming, poultry farming, piggery, small scale industries, seed money for setting up industries etc.

The maximum amount of loan advance is Rupees One Lac and the recovery period varies from 5 to 15 years. The rate of interest varies from 3% to 8% depending upon the amount of loan and period of recovery.

(c) INTEGRATED RURAL DEVELOPMENT PROGRAMME

The objective of the programme is to assist weaker sections of the society having an annual income of Rs. 6400 or less. Under this programme the small and marginal farmers and agricultural laborers defined as under are provided loans for various avocations.

(1) SMALL FARMER: A cultivator having an un-irrigated land holding of 2 hectare or below or having one hectare Class-I irrigated land is called a small farmer.
(2) MARGINAL FARMER: A cultivator having an unirrigated land holding of one hectare or below or having half hectare Class-I irrigated land is called a marginal farmer.
(3) AGRICULTURAL LABORERS: A person without any land other than homestead and deriving more than 50% of his income from agricultural waters is an agricultural laborer.

SUBSIDY:
Subsidy is available varying from 25% to 66.6% for various types of beneficiaries subject to a ceiling of Rs. 3000/- to RS. 5000/- per family. State level/District level/Block level committees are formed by the Government including public representatives to supervise the implementation of

the programme. The programme is implemented through District/Block Rural Development agencies.

RATE OF INTEREST:
The credit is available to I.R.D.P. beneficiaries on 10% concessional rate of interest.

REPAYMENT OF LOAN
The loans under Integrated Rural Development Programme are repayable normally within 3 to 5 years.

TRAINING OF RURAL YOUTH FOR SELF-EMPLOYMENT
This is another component of I.R.D.P.; the objectives of TRYSEM scheme is to provide technical skills to Rural Youth from families below poverty line to enable them to take up self-employment in the field of agriculture, industries, services, business etc. After identification of beneficiaries, the youth are imparted training in various avocations. The priority is given to the members of Scheduled CAstes and Scheduled Tribes. In addition to stipend and honorarium, tool-kits are provided to trainees free of cost.

DEVELOPMENT OF WOMEN AND CHILDREN IN RURAL AREAS
The objective of the scheme is to provide assistance for income generating opportunities to women members of the weaker sections of society.

(d) PUNJAB STATE CO-OPERATIVE AGRICULTURE DEVELOPMENT BANK LIMITED
The bank advances loans to its members for purchase of land, poultry farming, dairy farming, orchards, pisciculture, irrigation purposes etc.. Any person having land or landless laborer and not less than 18 year of age can become member of the bank. The member has to deposit an amount equal to 5% of loan amount as share money. Rate of interest varies from 10% to 12.5%. Bank also provides subsidiary for pisciculture. The loan is returnable in 3 to 13 years depending upon terms and conditions of loan.

IV. IMPLEMENTATION COMMITTEE

It has been decided to constitute implementation committee at District level to ensure effective implementation of relief and rehabilitation measures for the Project Affected Families. Separate Committee will be formed for each District in which the Dam is located.

(a) MEMBERS OF THE COMMITTEE
The committee will be formed to include Government officials and representatives of non Government Organizations. The Deputy Commissioner of the District will be its Chairman. The other officials of the committee shall be Executive Engineer concerned

(Member Secretary), the Sub Divisional Magistrate (Civil), District REvenue Officer, Land Acquisition Officer and the Divisional Forest Officer. The Non Government Organization members will be M.L.A/EX-M.L.A. of the area, village Sarpanch and two representatives of the Project Affected Persons.

(b) TERMS OF REFERENCE OF THE REHABILITATION AND RESETTLEMENT PLAN IMPLEMENTATION COMMITTEE

1) To review the mode of assessing compensation for land and property at the prevailing market rate so as to ensure fair compensation.

2) To identify suitable Panchayat/Evacuee land for providing alternate house sites to the oustees.

3) To allot house sites to oustee families as per the scheme.

4) To assign responsibilities of rehabilitation and resettlement to concerned departments.

5) To supervise training arrangements for those who have opted for alternate avocations/occupations.

6) To assist the ousters in purchase of alternate land in case of those who want to carry on with their existing profession of agriculture.

7) To help arrange and administer financial assistance from the project to small and marginal farmers affected by the project for the purchase of land or starting other gainful avocations/occupations according to their preference.

8) To ensure provision of all basic and civic amenities in their new places of settlement.

9) Any other aspect deemed necessary by the committee to mitigate the problems of the persons affected by the project.

10) Monitoring performance of the resettlement operation to ensure that the objectives of the plan are achieved, and make adjustments and improvements in the plan as required to relieve these objectives.

V. DETAILED PLANNING AND MONITORING

The project in cooperation with the District Resettlement and Rehabilitation Committee will prepare site-specific development plans for the areas of the receiving displaced families. These plans will be the product of joint-planning among the Committee, beneficiary population, and displaced people and will be ratified by all parties one year prior to implementation.

INDIA

PUNJAB IRRIGATION AND DRAINAGE PROJECT

Kandi Groundwater Development

Introduction

1. The construction of about 240 public tubewell irrigation facilities is proposed under the project. The facilities will be located in eleven selected blocks of Gurdaspur, Hoshiarpur and Ropar Districts (Map IBRD 20801) where deep water levels and/or difficult drilling conditions prevent the development of the ground water resources by the private sector. The command areas of the proposed facilities are presently dependant on rainfall for agriculture and they do not lie within areas which may be expected to receive a surface water irrigation supply in the foreseeable future.

Physical Features

2. The proposed development areas lie within the piedmont zone adjacent to the foothills of the Himalayas. The selected areas in Balachur, Bhunga, Dasuya, Mukerian and Talwara Blocks of Hoshiarpur District, and of Dhar Kalan and Pathankot Blocks of Gurdaspur Districts are located on alluvial fans where land slopes are steep and the soils are sandy loam or loamy sand. Much of this land has been roughly terraced, but considerably levelling will be required for irrigation. The areas of Anandpur Sahib and Nurpur Bedi Blocks of Ropar District are in inter-montane valleys where slope and soil conditions are similar to those on the fans discussed above. The selected areas of Narot Jaimal Singh and Bamial Blocks of Gurdaspur District are located on interfluves within the tributary complex of the Ravi River at the edge of the alluvial plain. Here the land is flat and the soils are mainly of riverain silt. Flood protection embankments have been provided along the Ravi River and were effective during the record floods of 1988. The mean annual rainfall in the area ranges from about 1,000 mm to 1,600 mm, increasing to the northeast and towards the hills.

Hydrogeology

3. The aquifer system is formed by alluvial deposits which are typical of the piedmont zone, consisting of lenses of boulders, gravel, sand and silt of varying thickness and lateral extent. Beds of clean coarse material form the aquifers which are under some degree of confinement at depth within the sequence. Depth to water level ranges from about 3.0 m below land surface on the interfluve area of western Gurdaspur to more than 50 m in parts of the alluvial fan zone. Regional groundwater flow is towards the southwest. Recharge conditions are good due to the relatively high rainfall, the high infiltration rates of the soils, and the dense network of streams and rivers which cross the area. Developments associated with the construction of low dams in the Kandi Zone will enhance recharge. The chemical quality of the ground water is good and suitable for irrigation of all types of crops.

Tubewell Irrigation Facilities

4. Due to the varying aquifer conditions in different parts of the project area, yields ranging from 75 m^3/h to 150 m^3/h may be expected from wells of varying depths and pumping water levels. A water duty of 0.56 l/sec/ha has been selected, and well command areas of 38 ha, 50 ha and 75 ha are planned in accordance with expected well yields. The tubewells will be equipped with submersible electric pumps. The power supply will be through 11 kV and 440 V distribution lines which will be extended from existing 33/11 kV transformer stations as a cost to the project. The water will be distributed from the well head through buried PVC pipe distribution systems with turnouts through alfalfa valves to outlet commands of about 4.0 ha. Below the valve outlets, the water will be distributed to the field through earthen channels.

5. Tubewells The tubewells will range in depth from 65-200 m. Pumping heads are expected to range from 30-90 m. Depending on drilling conditions imposed by the formations encountered, the wells will be drilled either by percussion rigs or rotary rigs, or by a combination of percussion and rotary drilling. Well tubular materials will be of mild steel pipe. The pump chamber will be of 300 mm diameter and the blank casing and slotted pipe screens will be of 200 mm diameter. The wells will be gravel packed.

6. Pumphouse The pumphouse will be brick-built, incorporating an elevated horizontal girder as a hoist which will be used for mounting a chain pulley set to withdraw the pump unit for servicing.

7. Distribution System Water will be distributed through buried PVC pipe systems with alfalfa valve outlets at about 4 ha. The pipe systems will be in closed loops. Single loops are planned for commands up to 50 ha, whereas the larger systems will be served through a double loop with each loop serving an equal area. The PVC pipe will be specified for 2.5 kg/cm^2 internal pressure and will be of 200 mm diameter above the loop and 160 mm diameter within the loop. The pipes will buried at about 1 m depth below land surface. Pressure within the pipes will be maintained from an elevated tank of reinforced brick construction. A simple header tank will be provided for the single loop systems. The double loop systems will be provided with a distribution chamber designed to equally divide the well discharge between the two loops and to permit withdrawals from the loops to be made independently. The iron alfalfa valves will be set in brick-built distribution boxes. Earth channels constructed by the farmers will deliver the water from the valved outlets to the fields.

8. Pump Units Submersible electric pumps and appropriate starter relays together with motor protection devices will be installed on the wells. A digital operation-hour recorder will be fitted on the 440 V delivery line to the pump motor. Pump motor capacities will range from 20 HP to 80 HP depending on the design discharge and pumping head at any locality. However, discharge/motor capacity characteristics of the pump units have been grouped, as far as is possible, to facilitate maintenance.

9. Automation of Pump Operation The elevated tanks of the distribution systems (para 7) will be fitted with high level and low level float switches connecting to the pump starter relays. These switch devices permit start up of the pump unit in response to withdrawals on the pipe line(s) and shut down when withdrawals cease or reduce and tank water level rises to maximum design level. Thus, operation of the pump unit becomes independent of the presence

level. Thus, operation of the pump unit becomes independent of the presence of the pump operator.

10. Power Supply The tubewell facilities will be located in areas where the existing density of 11 kV distribution lines is sparse. Therefore, it will be necessary to extend 11 kV lines from existing 33/11 kV transformer sub-stations to the well locations. To minimize costs of power transmission, the wells to be energized have been clustered, so far as possible, on the existing sub-stations. It should be noted that, although the power lines will be constructed under the project, they are not intended to be retained as dedicated lines. However, the provision of independent switch gear at the sub-stations would allow special treatment to the project wells if operational circumstances demand such treatment.

Capital Cost Estimates of Tubewell Facilities

11. On the basis of the detailed cost estimates of the various types of tubewell facilities, the weighted average capital costs of the components of an "average" tubewell facility serving a 59 ha average command area have been derived as follows:

Capital Cost Estimate for an Average Tubewell Facility on 59 ha

Item	Description	Base Cost (Rs)	Physical Cont (%)	1989 Cost
A.	Preliminary	4.0	0	4.0
B.	Tubewell System			
1.	Tubewell construction	341.0	10	375.1
2.	Pump house	17.6	0	17.6
3.	Elevated tank and pipe distribution system	236.4	10	260.0
4.	Pump unit complete	69.3	5	72.8
5.	Installation of pump unit	2.0	0	2.0
Sub-total	**(1-5)**	**666.3**	**(0.9)**	**727.5**
C.	Power transmission	98.5	5	99.6
D.	Establishment at 12.5% of items 1-6	83.8	(0.9)	90.9
Total		**768.8**		**922.0**

(Cost per hectare of an average tubewell facility = Rs 15,600)

Other Capital Expenditures

12. The works will be implemented by the Punjab State Tubewell Corporation (PSTC) which is equipped to undertake such works. However, it will be necessary to purchase some equipment and vehicles and to erect some building for implementation of the project.

13. Equipment and Vehicles. The following equipment and vehicles would be procured under the project at the indicated estimated cost in mid-1989 prices:

Item	Description	Unit Cost (Rs. M)	Number	Total Cost (Rs.M)
1.	Heavy duty percussion rig	4.00	4	16.0
2.	Air compressor	0.55	2	1.1
3.	Heavy duty trucks	0.30	4	1.2
4.	Miscellaneous office and field equipment	sum	-	0.2
	Total			**18.5**

14. Buildings. A temporary store will be erected for storage of construction materials at a cost of Rs. 25,000.

Replacement of Tubewell Facilities

15. The assumptions for replacement of tubewell facility components are as follows:

Item	Description	Year of Replacement
1.	Tubewell	Replaced after 15 years
2.	Pump house	Replaced with well after 15 years
3.	PVC pipes	Replaced after 25 years
4.	Pump unit	Replaced after 10 years
5.	Power system	Not replaced at project cost
6.	Other components	Maintained through life of project

Annual Operation and Maintenance Costs of Tubewell Facilities

16. The O&M costs for an average tubewell facility serving 59 ha are estimated as follows.

A. Energy costs have been computed for an average facility using the following assumptions:

a) average pump motor capacity = 33.5 HP = 25 KVA
b) average pumping hours = 2,500 hr/yr
c) fixed charges for meter = Rs. 168/yr
d) energy consumption charges = Rs. 0.56/KWH
e) excise duty on energy consumption = Rs. 0.11/KWH

The annual cost of energy for operating the average pump for 2,500 hr/yr is Rs. 2,500 x 25 x (0.56 + 0.11) + 168 = Rs. 42,043, say Rs. 42,000.

B. Staff salary costs are estimated as follows for the average tubewell facility:

Item	Description	Annual Cost (Rs.)
1.	Pump operator at Rs. 1,400/month	16,800
2.	Other maintenance staff salaries	2,300
3.	Allowance etc. for 1 & 2 above	3,400
4.	Supervision staff salaries and allowances	1,560
	Total	**24,060**

Of this amount, roughly two thirds would be recovered through the direct charge for power to the beneficiaries.

INDIA

PUNJAB IRRIGATION AND DRAINAGE PROJECT

Studies, Pilot Demonstrations and Establishment of Monitoring Systems

Introduction

1. A number of studies and demonstrations to test improved irrigation technologies, to investigate possible practices for use of poor quality groundwater for irrigation, to develop skimming well technologies, and to compare relative performances of existing and improved irrigation practices in canal command areas were undertaken as research components of the earlier Punjab Irrigation Project. Some of these studies require long-term data to provide conclusive results, and a number of the studies have provided results which require additional information for general application. In addition, the preparation of the proposed project has revealed the need for additional studies and for establishment of appropriate monitoring systems. Thus the proposed studies component of the project will include continuation of studies initiated under the previous project, some newly identified studies and the establishment or strengthening of monitoring systems.

Continuing Studies from Punjab Irrigation Project (Rs 12.6.M)

2. Conjunctive use of brackish/saline groundwater with canal water (Rs 0.6 M) Under the first project, simple methodologies for determining sodicity hazard were developed and experimentation was established in farmers' fields with a range of soil textures to test water use procedures for conjunctive use of groundwater of various qualities with canal water. This experimentation and demonstration activity will continue under the project. The work will be carried out by the Water Resources Directorate (WRD) of GOPID.

3. Skimming fresh water overlying saline groundwater (RS 4.4 M) A thin layer of fresh water often overlies the generally saline groundwater in southwestern Punjab. The head relationships between the two layers are very fragile, and up-coning of salt water can occur if the skimming well device is not carefully designed and constructed. Experimentation with skimming wells was initiated under the first project, and both multiple shallow tubewells connected to a single centrifugal pump and a dug well with four horizontal bores were found to be effective if designed with pre-knowledge of the vertical distribution of water quality in the upper part of the aquifer system section. This experimental work will continue and will be carried out by the WRD of GOPID.

4. Groundwater quality distribution in southwestern Punjab (Rs 6 M) Use of the skimming well facilities discussed above (para 3) requires knowledge of the vertical distribution of groundwater quality in the upper layers. Investigations to determine the three dimensional distribution of water quality were initiated under the first project on 4,500 ha in the Mukatsar area through hand drilling with water sampling at 4.5 m, 9 m, 15 m, 25 m and 35 m depths. It is planned to extend this type of survey over the whole of the generally saline groundwater area which is at hazard from water logging in

the next ten years. The farmers have started to adopt skimming well technologies, but require water quality distribution information for designing appropriate structures. The work will be carried out by the WRD of GOPID.

5. Evaluation of Drip Irrigation. (Rs 1.2 M) An ongoing investigation of use of drip irrigation for fruit cultivation, which was initiated by Punjab Agricultural University under the first project, will continue.

6. Comparison of performances of existing and improved irrigation practices in canal command areas (Rs 0.5 M). This ongoing study, which was initiated under the first project, is being carried out by Punjab Agricultural University. The study is located in Jai Singh Wala village area of Bhatinda District. The study includes a wide range of experimentation with irrigation practices, use of other agricultural inputs, pest control, preparatory tillage practices, use of constrained water supplies and conjunctive use of brackish/saline groundwater with fresh canal water. Support for the study will continue under the project.

Application of Computer Technology

7. Improving Water Delivery Management. The principal objective of the project is to improve the efficiency and effectiveness with which water is delivered for irrigation by the Irrigation Department. Modernization of structures and lining of channels (Annexes 3 and 4) will make it possible to control better the flows in the system so that available water is used most effectively. The modern communication system (Annex 5) will make it possible to transmit data on water availability and flows in various parts of the system, reliably and quickly, so that decisions can be taken on how flows should be regulated at control points, and these decisions conveyed to the control points.

8. These improvements of communication and control capabilities should be accompanied by development of management methods through which appropriate decisions are taken on the basis of the large amount of precise data which will become available. Therefore, it is necessary that the following activities also be undertaken to derive maximum benefit from the large investment being made:

(a) development of advanced methods of management;

(b) provision of means for application of these methods by installing computers at appropriate locations; and

(c) training of personnel in using the methods.

9. The current Plan of Operation uses a rotational priority to decide which distributaries of the system will receive water. Because large branches of 3000 cusecs or more are operated in rotation, it usually turns out that one of the branches in second or lower priority has to be operated at part flow at any given rotational turn. It then becomes necessary to select a set of distributaries which it will be feasible to run with the flow available and the controls available on the branch. As similar decisions have to be made on the same branch several times a season, distributaries have to be selected

the same branch several times a season, distributaries have to be selected also with consideration to equitability.

10. The Potential for an Improved Plan of Operation: With the improvement in communication and control capability[1] that will be available through implementation of the project, computers with appropriate software can help to make the best choice and ensure high equitability performance. The application described above will involve maintenance of comprehensive information on how every distributary has run during the season. It is proposed that software [2] will be developed to support the operation of the irrigation systems under the rotational priority method, including methods for prescribing the choice of distributaries in partially run branches .

11. Diversity in cropping within the same command to match differences in soil, groundwater availability, etc. in different regions must be expected to increase when farmers strive to maximize returns in the modernized system. This may necessitate a review of the method of operation of the canal system with a view to giving maximum support to such diversified agriculture. It is necessary that work be undertaken to develop alternative methods of decision making on water allocation at every turn. The new communication system will enable such decisions to be communicated to the field promptly. The best means of testing alternative methods is to simulate on the computer how these methods will work, and evaluate the results of simulation. It is proposed to undertake work on developing alternative decision making methods. The work will include field tests in pilot areas of methods found attractive in simulation studies.

12. The Plan of Maintenance: The original system was provided with entirely unlined Lacey regime channels: these wide shallow sections closely approximate to natural rivers and require minimum maintenance but suffer from large losses in permeable ground. The structures used crude drop needle controls. The more efficient lined narrow sections now being introduced in selected reaches, and the new gated structures will require a more rigorous Plan of Maintenance. Maintenance of the canal system can be planned and organized better if a database in which maintenance requirements are entered as they are reported from the field is maintained on a computer. It is proposed that such a database be developed at each circle/division headquarters. Necessary software to plan maintenance works including working out manpower and material requirements will be developed.

13. The project will require a huge number of drawings, but large sets of them will be to the same prototype design, only with different parameters. It is possible to generate such drawings with a good CAD (Computer Aided Design) package. It is proposed to buy good software packages from sources in India or abroad. Computers with accessories, such as plotters, will also be bought

---

[1] The designs for modernization of control structures will take account of the need to operate various combinations of distributaries.

[2] Software to demonstrate how the above decision support system might operate, has been developed under World Bank sponsorship and made available to the Computer Cell in the office of the Chief Engineer, Canals. The software also includes an alternative method of water allocation at a turn, of the kind discussed in para 24.

or abroad. Computers with accessories, such as plotters, will also be bought and installed at selected locations.

14. While every effort will be made to build up in-house capability for developing software, it will be necessary to engage consultants to help the ID carry out some of the tasks outlined above. Cost estimates for the study sub-components are summarized below:

Description	Cost (Rs M)
Computers and accessories	4.0
Consultancy Services	2.0
Training of personnel	0.5
Software procurement	3.0[3]
Total	9.5

New Research and Monitoring Activities (Rs 41.8 M)

15. Study of Artificial Recharge on Surface Drainage Systems (Rs 2.5 M). The development of the groundwater resources of Punjab is at, or approaching, the safe limits in large areas of the State. Marked overdraft conditions are being experienced during dry sequences with falling groundwater levels in some areas. It is essential to conserve all waste water so far as is possible. Good quality water which is presently runoff through drains during storms, or as water which has to be escaped from canals during canal flow/irrigation demand mismatches offer possible sources of recharge water.

16. An experiment is proposed for artificial recharge which involves construction of low checks at intervals along the man-made master drains where they pass over fresh groundwater areas. The checks will create ponds which will infiltrate to groundwater. The spacing between checks will be a function of the height of the check and the bed gradient. With drain bed gradients of about 1:4,000, a 1.0 m high check would create a 4,000 m long pool upstream of the structure. Such low structures would not seriously affect the hydraulic characteristics of the drain, and they would be designed so that they would be swept away in the case of a very high flood flow.

17. The study will investigate:

(a) the most appropriate check structure design in terms of materials and height relative to the drain dimensions;

(b) the recharge benefits from creation of the sequence of pools; and

(c) any other benefits, such as farmer use of the stored water for irrigation by direct pumping.

The investigation will be implemented on the Patiala Ki Rao and Jayank Devi Ki drains which discharge to the Sutlej through Siswan Nade drain. The work will

---

3 Includes foreign exchange of about US $ 50,000

drains which discharge to the Sutlej through Siswan Nade drain. The work will be carried out by the WRD of GOPID.

18. Hydrological Study of Existing Water Logged Depressions (Rs 2.0 M) The land surface of the general area in which water logging conditions are developing in southwestern Punjab is gently undulating with local elevation variations of 3-4 m. Depression areas vary in extent from less than 50 ha to more than 500 ha, and are of varying shapes ranging from elongated to more or less equi-dimensional areas. As the water table rises towards land surface, water logging conditions first develop in the bottoms of the depressions. Field examinations of the presently water-logged areas indicate that the depressions are functioning as drainage sinks for both surface water and groundwater runoff from their micro-catchments. This interpretation of groundwater movement led to the hypothesis that provision of a pipe drainage system to lower the water table to a minimum of 1.0 m below land surface in a water logged depression (together with alleviation of any surface water drainage congestion) would remove the drainable groundwater surplus from a more extensive area of higher land surrounding the treated depression by lateral flow. It has been suggested that the ratio of treated land to drained land may be as high as 1:5 in some circumstances. Natural evaporation from the water logged surface would dispose of the concentrated groundwater surplus from such an area ratio (equivalent to 250-500 mm/yr) unless the groundwater became extremely saline.

19. However, the surface water and groundwater hydrology of waterlogged depressions has not as yet been studied in detail. The full effects of alleviating surface water drainage congestion on the overall water balance are unknown. Also, the lateral extent of the groundwater drainage benefit from treating a localized area on the valley bottom with tile drainage is unknown. As design decisions for both surface water and groundwater drainage systems depend on knowledge of such phenomena, detailed hydrological studies are proposed for two typical depression areas which are presently affected by water logging.

20. The areas selected for study would meet the following criteria:

(a) presently water logged area not less than 200 ha;

(b) one area with an elongated shape and one area with an equi-dimensional shape;

(c) artificial surface water and groundwater drainage not yet provided, but planned under the project;

(d) the area will have reasonable year-round accessibility.

21. The area of the micro-catchment will be accurately contoured at 25 cm interval and a network of benchmarks will be established so that flooded area can be easily assessed. The following instrumentation will be provided: (i) daily rain gauge backed up by a totalizing gauge; (ii) a gauging station for measuring runoff if any defined channel exists; (iii) a network of shallow piezometers on a grid of 200 m in the depression bottom extending to 400 m on the side slopes and covering the entire micro-catchment; (iv) a water level measuring instrument; (v) provision for baling out piezometers for water

quality sampling; and (vi) a portable EC meter. The piezometric network will be accurately levelled.

22. The following data will be recorded:

(a) before drainage treatment: daily rainfall; (ii) extent, depth and duration of flooding; (iii) runoff, if it occurs; (iv)piezometric water levels weekly; and (v)water quality in piezometers weekly.

(b) after drainage treatment: (i) above measurements continue; (ii) daily outflow from groundwater drainage system; and (iii) water quality of drainage outflow weekly.

In addition, more intensive observations will be made, as considered appropriate, to observe responses to particular conditions, as for example - intensive rainfall or irrigation application.

23. The data will be interpreted and reported annually with an appropriate series of piezometric maps, depth to water table maps, flood extent and duration maps and selected hydrographs of water level and water quality. The aim will be to establish a water balance and salt balance for the micro-catchments before and after provision [illegible] ainage treatment, and to define the extent of the area benefitting from [illegible] eatment. The work will be carried out by the WRD of GOPID.

24. Improvements to the Water Qu[illegible] Testing Capability of the Water Resources Directorate (Rs 4.0 M). [illegible] laboratory of the WRD is handling an increasing volume of work relating to water quality testing and particular problems relating to testing water quality resulting from industrial effluents turned out to the drainage system. The need to test groundwater quality for similar pollution may also be foreseen. The laboratory equipment, sampling equipment and transport facilities of the WRD require enhancing and this would be supported under the project.

25. Augmentation of Weather Monitoring Network (Rs 0.45 M). GOPID maintains a network of weather monitoring stations in the state. It is proposed to augment this network by 15 additional stations which will be equipped to monitor: (i) pan evaporation; (ii) rainfall intensity and daily rainfall; (iii) temperature; (iv) humidity; and (v) wind velocity and direction. The stations will be run by WRD of GOPID.

26. Establishment of a purpose-built Groundwater Level Measuring Network (Rs 7.0 M). Groundwater level monitoring in Punjab has relied mainly on water levels recorded in open village wells. Many of these are now being filled in as village water supplies are provided from hand pumped tubewells. Given the high level of groundwater development in the State, there is need for a properly spaced and equipped network of piezometers to monitor groundwater levels. It is proposed to install a network of piezometer tubewells to an appropriate depth below the phreatic water level at a spacing of about 5 km (1 piezometer/25 km^2). Many of the wells can be constructed by hand-drilling techniques. About 500 observation points will be equipped with water level recorders. The network will be established and monitored by the WRD of GOPID.

Monitoring of Seepage Losses from Lined Canals and Watercourses (Rs. 1.0 M)

27. Lining of canals of the Punjab Irrigation System was initiated in the early 1950s, continued with the development of the Bakhra System, and accelerated from the early 1970s when lining of the canal system of the state was started on a large scale. Some 3,000 km of lined canals exist in the State at present, and it is planned to line an additional 800 km of canal under this proposed project. Lining of water courses on a significant scale was initiated about two decades ago. The water courses of some 3,000 chaks are presently lined, comprising about 25,000 km. An additional 10,000 km of water course lining will be undertaken under the proposed project, and at 7.0 km per chak, this equates to about 1400 additional chaks with lined water courses.

28. The designs for lining of both canals and water courses have evolved over the years as experience has prompted modifications to previous design criteria. The present designs are basically a single brick over a sand-cement mortar layer underlain by polythene sheeting on compacted earth, for both canals and water courses. Preferred design cross sections are now cup shaped with steep side slopes for canals and water courses.

29. The benefits of lining are predicated mainly on water savings, but also on O&M improvements. The Irrigation Department has undertaken numerous studies of the performance of lining, and particularly the relative performance and cost of various designs standards. However, there has been no systematic program to monitor the effectiveness of lining canals and water courses over time in reduction of seepage losses. Standard techniques for estimating seepage losses have been developed by the Irrigation and Power Research Institute (IPRI) of Punjab. The need is now accepted to collect information on the effectiveness of lining for reduction of seepage from both canals and water courses in a more regular and systematic way as a basis for confirming long-term performance, and the adequacy of maintenance provisions.

Selection of Monitoring Sample

30. Given the existing length of lined canals and the present number of lined water courses, and the fact that these quantities will grow rapidly through time, complete monitoring of the effectiveness of the lined system is not feasible, and an appropriate sampling system for monitoring has been devised.

31. The IPRI now has staff and equipment to make detailed estimates of seepage losses on about 35 canal reaches and 65 water courses per year. It is proposed to double this capability under the project and to establish a system of regular monitoring of seepage losses based on 70 canal measurements and 130 water course measurements per year.

Proposed Canal Seepage Loss Testing Program

32. The program would be structured as follows:

a. IPRI will make 130 water courses loss tests per year at which 120 tests will be under the routine program and 10 tests will be reserved to investigate special situations;

b. the repeat testing will be at 5 years intervals and the test will be an exact repeat of the first tests to provide comparable results;

c. the program will be developed over 5 years to test the efficiency of water course lining in the entire range of geographic situations;

d. as the program will be developed to test the effectiveness of the present lining technique through time, the selected water courses will be either recently completed to present design standards, or constructed under the project;

e. the repeat testing program will cover 600 water courses or about 13.5% of the water courses lined by year 1994/95;

f. the 10 tests per year will be reserved for investigating special situations such as: (i) anomalously high seepage losses in any routine test chak or area of chaks; and (ii) specially identified water course which are not included under the routine program.

Cost Estimates

33. Capital Costs The IPRI will require additional vehicles and equipment to support the two additional measuring teams required for the program. The equipment and vehicle requirements and cost are summarized below:

	Cost (Rs 000)
Computing equipment	170
Gauging equipment	85
Office furnishing	50
Jeep with tractor	165
Total	**470**

34. Recurrent Costs The present costs of making the tests average Rs 650/test on canals and Rs 386/test on water courses. Therefore the recurrent costs (in 1989 prices) of the monitoring program for the 5 year project life are as follows:

Test Type	Unit Cost	Annual Schedule 90/1	91/2	92/3	93/4	94/5	Total No.	Cost Rs '000
1. Canals	650	70	70	70	70	70	350	228
2. W/Courses	386	130	130	130	130	130	650	251

Improving Operational Capability of Bhakra-Beas Management Board (BBMB) (Rs 25.0 M)

35. The BBMB is responsible for operation of the system of reservoirs, diversion structures and canals which harness the flows of the Ravi, Beas and Sutlej rivers, and deliver water to the states of Punjab, Rajasthan and Haryana in accordance with agreed entitlements. The Board also operates the large hydroelectric power facilities in the complex, and delivers power to the states of Punjab, Haryana, Rajasthan and Himachel Pradesh in their due shares. It is a statutory body reporting to GOI. Capital expenditures and operating expenses of BBMB are met by the beneficiary states according to agreed shares.

36. BBMB has prepared and Action Plan for implementation over a six year period, which is envisaged as the first stage in the process of bringing state-of-the-art methods to its operations. The components of the plan are:

a) procurement and installation of a modern communication system;

b) procurement and installation of a modern Load Despatch system for managing its power facilities;

c) development and implementation of an advanced decision support system for managing water deliveries;

d) development of methodologies for predicting stream flows into the system;

e) development of a decision support system for annual, seasonal and monthly water allocations;

f) investigation of prospects for adding intermediate water storages in the system, and for adding pumped storage hydro plants;

g) institution development towards building capability to apply modern methods and tools for decision making.

37. The project will finance items (c) through (f) of the above list. The total of the expenditures estimated for these items is Rs 25 M. Brief descriptions and cost estimates of the components are given below.

38. Decision Support System for Water Delivery Control (Rs 14.0 M): The beneficiary states can use the water delivered to them to best purpose if BBMB can adhere to the deliveries planned at monthly allocation meetings. However, fluctuations occur due to many reasons, of which the principal are:

a) releases for power generation are not uniform, and there is not enough in-line storage in the system to smooth the fluctuations adequately;

b) demands from the power grid into which BBMB is tied often require it to deviate from generation planned;

c) many small streams flow into the Beas and Sutlej below the dams, and add to the waters reaching the "contact" points at which BBMB delivers water to the states; and

d) even without these inflows (c), BBMB cannot predict water availability at Harike with much precision because the water is conveyed through long natural channels of the Sutlej and Beas.

39. A computer model of the water conveyance system, which can simulate dynamic flows in the system, can be used to manage releases at the reservoirs, and operate the in-line storages available, in such a manner as to adhere closer to the planned deliveries, and reduce fluctuations. It is proposed that a decision support system based on such a computer model be developed. This will require hiring of a foreign consultant firm, or a joint venture of a foreign firm and an Indian firm, as expertise in development of such a system is not available in India. Development of the system will include the following:

a) a study visit by senior BBMB officers to comparable systems abroad where modern methods of water delivery management are in operation, to enable BBMB to draw up terms of reference for the system it would like to install;

b) development and implementation of the decision support system, including the hardware and software;

c) training BBMB personnel at installations abroad where similar decision support or control systems are in operation, and;

d) training of BBMB computer and operating personnel in O & M of the implemented system.

40. It is estimated that about 36 man-months of expatriate effort and about 50 man-months of Indian effort will be required. The financial provisions are as follows:

	Costs	
	Foreign (US $ M)	Local (Rs M)
Consultancy services and equipment	0.4	5.6
Study tour and training of operating Personnel abroad	0.1	0.4
Total	0.5	6.0

41. Development of Streamflow Prediction Methodologies (Rs 6.0 M): Management of releases from the reservoirs at Bhakra and Pong will be easier and more effective if the following contributions to the system can be predicted over the short range with some accuracy:

a) contributions from snowmelt during April-June;

b) contributions from the major rainfall catchments above the reservoirs during the monsoon period June-October; and

c) contributions to the natural channels of the Sutlej and Beas between the dams and Harike during the monsoon

42. In the years 1980 - 1983, the Indian National Remote Sensing Agency (NRSA) provided to BBMB forecasts of flows in the Sutlej from snowmelt, based on satellite imageries. While the predictions were not sufficiently accurate, they have given confidence that good results could be obtained with additional information from the ground. NRSA has made a proposal for a two year study to improve the prediction methodology, with ground equipment installed on pilot basis at six selected locations. This study is expected to cost Rs 0.8 M.

43. A number of institutions in India (e.g. the National Institute of Hydrology, the Central Water Power and Research Station, and Indian Institutes of Technology) could take up the task of developing catchment models for predicting streamflow. Groups of contiguous catchments could be assigned to different institutions after ensuring that they have the capability to carry out the work. The cost of developing models for these catchments, and installing equipment to acquire and transmit data for effective use of these models, is expected to be Rs 6.0 M.

44. Decision Support System for High Level Decisions (Rs 2.0 M). Decisions on seasonal water allocations from anticipated water availability are taken at meetings of the Board before each season. A Technical Committee consisting of senior irrigation and power officials of the states and the BBMB meets toward the end of each month to take decisions on the reservoir releases for the following month. The decisions to be made at these forums are quite complicated because the entitlements of the states for water and power are stated in complex terms, and the decisions have to be taken with due consideration to effective use by the partner states of the water and power deliveries. A decision support model incorporating these complexities could help each partner state to study the options available, and work out a strategy for negotiation, as invariably there are conflicts between the stated requirements of the states (at least in the time distribution of releases, if not in total quantum). This can be expected to lead to improvement in the final decision, and the resulting performance. Studies done in the past indicate that a Linear Programming model could provide a good basis for this decision support system.

45. This study sub-component will develop a decision support model with the above described capabilities, and train concerned personnel in its use. The model could be developed with in-house effort supplemented by help from a consultant, or could be fully contracted to a consultant.

46. Investigations of Intermediate and Pumped Storage Potentials (Rs 3.0 M): Water releases through the power plants at Bhakra and Pong are subject to large fluctuations during the day, as required for energy generation. The ponds at Nangal, Ropar and Harike are inadequate to smooth these fluctuations

before water is delivered to the irrigation systems. The storages at Nangal and Harike are now considerably less than they were when constructed, due to siltation, but estimates of cost of restoration of even part of the lost capacity look prohibitive. Investigations of restoring storages will be pursued further, and the possibilities for constructing new intermediate storages will be investigated.

47. New thermal plants of large capacity have been commissioned on the North Indian electrical grid into which the hydel generation controlled by BBMB is tied. As rapid on/off operations of large thermal units is not desirable, the grid now has excess thermal generation at times of low load. But the need to release water from Bhakra and/or Pong to meet irrigation requirements still remains, and BBMB often has to by-pass its hydel generators with water released at times of low energy demand. A possible solution is the installation of pumped hydel plants in combination with associated storages below the main dams where water released in excess of irrigation demand is retained during the high energy demand period and from where the surplus thermal energy of the low demand period is used to lift the water to a higher level for re-release through generators during energy demand peaks. Investigations of the relationships between thermal and hydel generation capacities and energy demands in the medium term, and of likely sites for pumped hydro plants with associated low and high level storages will be undertaken as part of this study sub-component.

INDIA
PUNJAB IRRIGATION II PROJECT
Schematic of Decision System

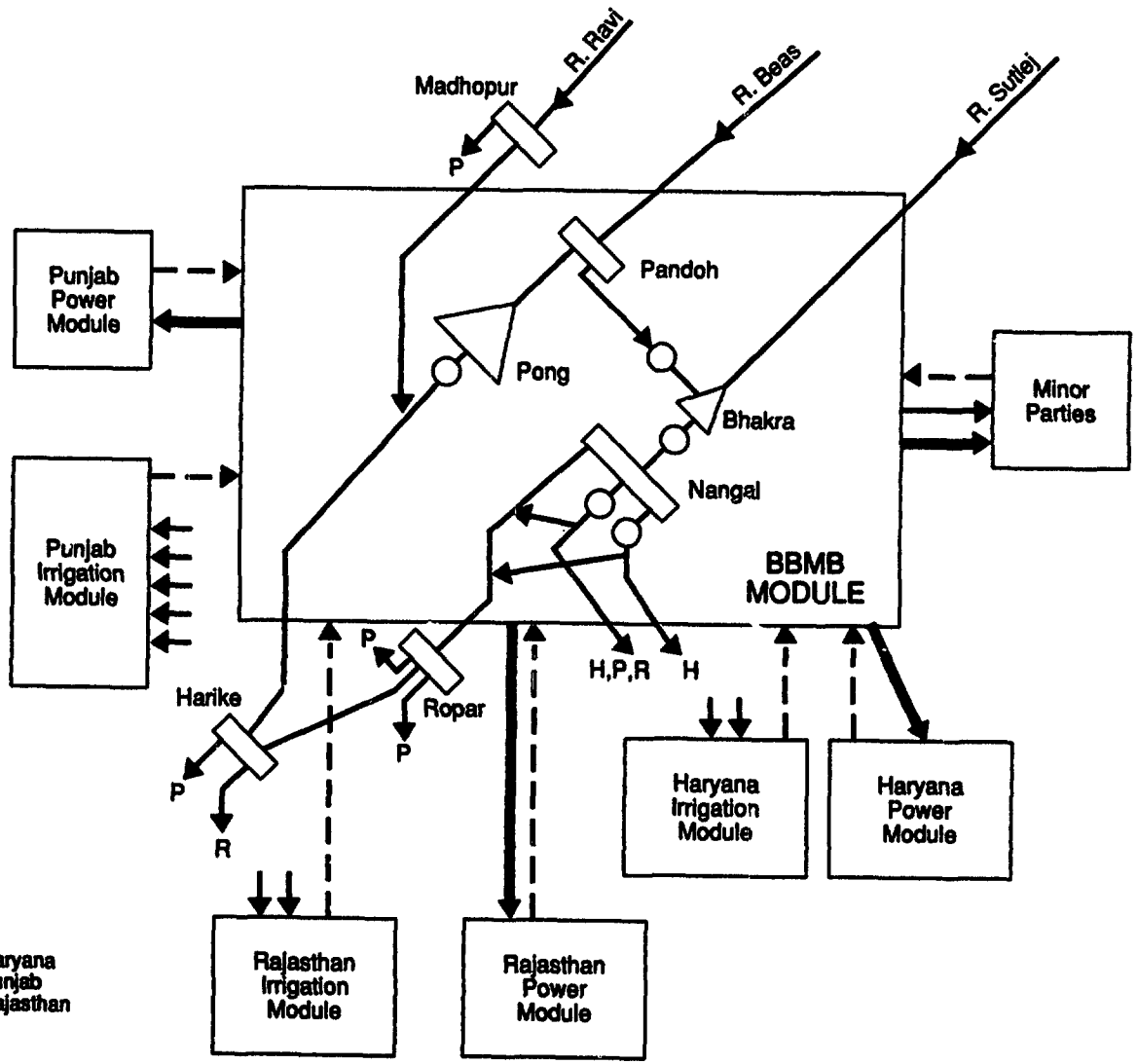

Key:

- Hydro Generation Plant
- Barrage
- Dam with Reservoir
- Water Delivery — H - Haryana, P - Punjab, R - Rajasthan
- Information Flow
- Power Delivery

BBMB - Bhakra-Beas Management Board

cakw45311

INDIA

PUNJAB IRRIGATION AND DRAINAGE PROJECT

Institutional Development

A. Punjab Irrigation and Management Training Institute

1. Many states have set up Water and Land Management Institutes (WALMIS) but the pattern adopted does not suit the needs of the Punjab, where farmers are well trained to use water economically and warabandi has been successfully employed. After detailed study, the nearest parallel which could provide suitable model for Punjab is the Training Institute situated in the same premises as the Maharashtra Engineering Research Institute (MERI) which has been successfully working since 1964. It utilizes the laboratories of MERI and staff to the extent needed and has an independent teaching faculty. It provides training to new entrants and in-service training to the engineering staff through refresher courses (an engineer is sent to the institute after five years to update his knowledge). For special subjects, guest lecturers with appropriate experience are invited. The training institute is under the administrative control of the Maharashtra Irrigation Department. A Principal-Cum-Director runs both the Training Institute and the Research Institute.

Location and Staffing

2. The proposed institute would be located separately in the buildings at the disposal of the Irrigation & Power Research Institute (IPRI), Amritsar. Some additional accommodation would be provided by completing a number of buildings in the existing complex. Initially, faculty members will be drawn from the experienced staff from the Punjab Irrigation Department and from the Agriculture, Soil Conservation and Forest Departments of Punjab Agricultural University, Ludhiana and other engineering colleges. Ultimately, an independent teaching faculty will work for the proposed Institute under its own Director. The Punjab ID will act as the nodal department.

Objectives and Scope

3. The objectives of the PIMTI will be to provide training to new entrants at various levels, and to provide in-service training to the staff at higher levels. The latter training would be imparted by organizing 3-4 weeks refreshers courses. PIMTI would also organize workshops to provide interaction between the field staff, trainees and teaching/training faculty to find solution to the problems being faced. It would also provide training in modern management techniques i.e. Programme Evaluation & Review Techniques for effective monitoring during construction and operation and effecting cost control. Training would also cover structural and mechanical tasks being faced by the Punjab ID engineers to enable better control on irrigation waters.

Organization

4. PIMTI will be headed by a Director in the rank of Superintending Engineer from Punjab ID. The Director will be assisted by two Joint Directors - a Joint Director (Training) and a Joint Director (Refresher Courses) - also in

the pay scales of Superintending Engineer and to be drawn from research/scientific community. The Director will function under the administrative control of Chief Engineer (Research). There will be six Associate Professors who will head the faculties of Soil Science; Plant Science, Irrigation Engineering, Computer Science, Mechanical and Electrical Engineering and Hydraulics. There will be two visiting professors who will be paid honorarium for the period spent with PIMTI. There will be an Administrative Officer in the pay scale of Executive Engineer to assist the Director. He will be assisted by an accounts branch and an administration branch. PIMTI will have a trained Librarian and an Assistant Librarian and supporting staff. Staff consisting of one Head Draftsman and two Draftsmen will assist in the preparation of drawings, estimates, compilation of data, etc. Transport will comprise: two staff cars, one mini bus, one station wagon for the use of Director, Joint Directors, and trainees for field visits.

Accommodation

5. Staff Residential accommodation will be constructed at Gawal Mandi located at a distance of about 1 Km from the proposed location of PIMTI, to accommodate six officers and ten subordinates in the first instance. The land belongs to the ID.

6. Hostel Accommodation for Trainees. A hostel will be constructed on ID land at Doburji to accommodate 30 trainees. In addition, provision will be made for a mess for the trainees, common room, and accommodation for caretaker, etc. The land is about 8 Km from the proposed location for PIMTI and is just at the boundary of Amritsar city on Amritsar-Jalandhar Road.

B. Facilities and Equipment for the Irrigation Department

7. The Irrigation Department is currently distributed over eight locations in Chandigarh, in offices rented from private and other government agencies. This has several adverse implications: first, and most importantly it limits the professional contact among different parts of the organization, second, it discourages the investment in facilities where sites are not permanently occupied, and thirdly, it is expensive.

8. Under the project, a central office would be constructed to house the entire head office staff. Equipment (computers, software, drawing office and other technical facilities) would be supplied, and support would be given through training and study tours for professional skill development in areas such as computer aided design, and critical path analysis.

INDIA

PUNJAB IRRIGATION AND DRAINAGE PROJECT

Future Irrigation Development

A. Remodeling of Badshahi Canal System

Background

1. The Badshahi Canal command area is located on the left side of the Ravi river in Gurdaspur District of northeastern Punjab. The command area is bounded by the Ravi in the west and the UBDC Hydel Channel (Annex 13) in the east. The existing system provides irrigation to about 4,550ha (11,380 acres) in 38 village areas.

2. The Badshahi Canal is a very old channel which predated the UBDC system constructed in the mid-19th century. It has retained a water right from the Ravi since that time. Originally, the canal had an ungated inundation intake from the Ravi, but it is now supplied from the UBDC Hydel Channel through the Salampur Feeder and then the Salampur Minor. The supply is non-perennial, but with a high duty of 20 cfs/1000 acres. The existing channel is not to a design section and follows an irregular alignment. There is no proper arrangement of water deliveries and much water is wasted. The farmers maintain the system and a water cess is not levied.

Remodeling Proposal

3. It is proposed to provide a properly designed and modernized irrigation system to the area now served by the existing system (4,550ha) and to an extended area of 2,720ha (6,795 acres) on the downstream of the present command. The water duty of the existing command area will be reduced to 7 cfs / 1000 acres and a duty of 3.5 cfs / 1000 acres will be allocated to the extended area, but the supply will become perennial.

4. The works will involve construction of a canal of appropriate capacity on a realignment to replace the existing channel, and extending the canal to serve the new part of the command area. The canal will be lined in cup-shaped section in accord with Punjab ID standards (Annex 3). A canal head regulator will be provided together with drops, bridges and escapes as necessary. There will be 44 level controlled outlets to chaks (average area 165 ha) distributed along and on both banks of the canal. Flood protection and cross drainage works are not required (the command area already has the necessary flood protection embankment).

Cost Estimates

5. A summary of the estimated costs of the project by major components is given below.

Item	Description	Base Cost (RsM)	Phys. Cont. (%)	Total (RsM)
A.	Preliminary	0.241	10	0.265
B.	Land	6.685	10	7.354
C.	Canal Works			
	1. Regulator	0.100	10	0.110
	2. Falls	0.515	10	0.567
	3. Bridges	3.085	10	3.394
	4. Earth work	3.688	10	4.057
	5. Lining	9.177	10	10.095
	6. Outlets	0.220	10	0.242
	7. Water courses (unlined)	0.036	10	0.040
	8. Miscellaneous	0.975	10	1.073
	9. Maintenance (1%)	0.178	10	0.196
D.	Establishment and Eng. Supervision at 12.5% of A-C	3.113	10	3.4242
	Total	28.013		30.814

Note: All costs at mid 1988 level.
The average investment cost per hectare is about Rs 4240 including physical contingencies. The project is planned for implementation over a four year period.

B. Upper Bari Doab Canal Hydel Project

Background

6. The Upper Bari Doab Main Canal (UBDMC) takes off from the left bank of the River Ravi at Madhopur Headworks. The canal was originally constructed to convey run-off-the-river water from the Ravi to serve irrigation to a large command area, most of which is now in Pakistan. As water of the Ravi was allocated to India under the Indus Water Treaty, the major proportion of the low flow on the river is now transferred to the Beas and thence to the Sutlej through the Madhopur Beas Link Canal (MBLC) to serve irrigation elsewhere in Punjab and in Haryana and Rajasthan.

7. Madhopur Headworks has a diversion capacity of 500 m^3/s (17,500 cfs) of which 285 m^3/s (10,000 cfs) goes to MBLC and 215 m^3/s (7,500 cfs) goes down UBDMC to serve irrigation in the part of the Upper Bari Doab command remaining with India. The first cross regulator on UBDMC is at Tibri, about 45.5 km below Madhopur Headworks. In this reach of the canal, there are many drops in the form of chutes, and since 1964, GOP has undertaken works associated with the UBDMC by constructing a hydel channel from Madhopur to make use of the fall on the upper 18.3 km of the canal for generation of power. There is potential for additional power generation on a hydel channel from km 18.3 to just above the Tibri regulator and on a link canal to the Beas taking off from the hydel channel which could be used to escape water when there is no demand in UBDMC command area.

8. The hydel channel from Madhopur Headworks to km 18.3 of UBDMC loops to the right of the main canal. Under the first stage of the scheme, three power

houses, each of 15 MW capacity, were constructed at kms 4.1, 7.5 and 12.2 of the hydel channel which then had a discharge capacity of about 104 m^3/s (3,625 cfs). The second stage was started in 1984. The hydel channel was remodelled to carry about 207 m^3/s (7,250 cfs) and additional power houses, each of 15.45 MW, were located in parallel at each of the earlier power house sites, giving total generating capacity of 91.35 MW on the channel.

Planned Hydel Works

9. The third stage works plan to capture the remaining hydropower potential on the UBDMC from below the third pair of power stations on the Stage I/II hydel channel to the Tibri regulator. The planning for these works takes account of the regulation of flow on the Ravi that will be available when Thein Dam is completed. Power releases at the dam would be about 357 m^3/s (12,500 cfs), and this would be re-used for power generation at a proposed power station at Shahpur Kandi about 12 km below Thein, which would tail water to the Ravi above Madhopur. At the headworks, 207 m^3/s would be delivered to the existing hydel channel, and the remaining 150 m^3/s would be passed through a parallel hydel channel which is planned on an alignment to the right of the existing channel. The new channel would have three power houses, each of about 23 MW capacity and located close to the existing power facilities. Below the third group of power houses, the existing and proposed channels would join to a single channel with a capacity of 357 m^3/s which would continue on an alignment on the right bank of UBDMC to outfall above Tibri. A power facility with three units of 16.5 MW would be installed at a drop on the extended hydel channel.

10. The extended right bank hydel channel with 357 m^3/s capacity and its associated facilities constitutes what is now called the Stage III project.[1] However, the efficiency of working of the existing power facilities (and of the proposed Stage III and Shahpur Kandi Schemes) is constrained by the lack of escape capacity. There is the opportunity to provide escape from the UBDMC just above Tibri to the Beas. This escape can be constructed as a hydel channel to exploit a potential power drop on the 8 km reach to the Gaddi Nalah and thence to the Beas. If constructed with a capacity of 357 m^3/s with 163 m^3/s (5700 cfs) considered as sufficiently firm for power generation, a power facility of 24 MW capacity can be installed on the channel. The channel would essentially replace the MBLC escape in function.

11. The UBDC hydel development component which could be financed under the project would include the extended right bank hydel channel and its associated power facility, plus the escape cum hydel channel to the Beas (the power facility on this channel would be constructed later).

Power Generation

12. It is estimated that the power generation of the Stage III facility would be about 150 M kWh/yr during the period before Thein dam is completed. After the completion of Thein dam and associated downstream hydel development, generation would increase to about 244 kWh/yr. These levels of generation

---

[1] The original Stage III project had the hydel channel aligned on the left side of UBDMC.

generation would increase to about 244 kWh/yr. These levels of generation assume the availability of the escape channel to the Beas.

Cost Estimates

13. Provisional cost estimates for the works which could be financed under the project are:

		RsM
Stage III hydel channel		1000
Power house and appurtenances		300
Electrical works		150
	Subtotal	1750
Escape channel		320
	Total	2070

C. Construction of Combined Bikaner and Eastern Canals

Background

14. The Bikaner Canal and the Eastern Canal (Main Branch) take off from Ferozepur Headworks on the Sutlej River and run almost parallel and in close proximity for about 61 km. The Bikaner Canal, constructed in 1926, carries water to Rajasthan to serve the Gang command area. It was originally lined with lime mortar to which upper courses of brick lining were later added, but the entire lining has now deteriorated so that it is completely ineffective for controlling seepage losses. The Eastern Canal was constructed in 1933 to serve irrigation in the Punjab, and is an unlined channel. Due to the failure of the lining of Bikaner canal and the lack of lining in Eastern Canal, a broad stretch of land in their vicinities has become completely water logged.

15. Rajasthan plans to reline the Bikaner Canal to modern standards. The work within Punjab will be carried out by Punjab ID against reimbursement by Rajasthan. To take full advantage of this situation, Punjab plans to construct a combined channel for the Bikaner and Eastern Canals from RD 45,000 to RD 190,400 (about 44 km), with the additional cost involved in creating the additional capacity and linking to existing distributaries of the Eastern Canal system being at the expense of GOP. The channel below RD 190,400 to RD 368,500 at the Rajasthan border will function exclusively as a feeder channel for Rajasthan.

Description of Works on Combined Channel

16. The design discharge at the head of the Bikaner Canal is about 78 m^3/s (2720 cfs) and it was intended to deliver 75 m^3/s (2640 cfs) at the Rajasthan state border. The head discharge of the Main Branch of Eastern Canal is about 69 m^3/s (2411 cfs). The Eastern Canal runs close to the right side of Bikaner Canal from the head to RD 72,500 and again from RD 129,200 to 190,400; in the intervening reach it loops away from Bikaner Canal. The design discharge of the combined canal starting at RD 45,000 will be about 146 m^3/s (5105 cfs) which is calculated to be sufficient to supply 75 m^3/s to Rajasthan at the border and Punjab's share to the area commanded by the Main Branch after accounting for transmission losses in the canal. The lined channel will be in

accounting for transmission losses in the canal. The lined channel will be in trapezoidal section with a double layer of tile lining.

17. In addition to constructing the combined channel for additional capacity, Punjab will also have to make arrangements for reconnecting Mehma Minor and Kanianwali Distributary to the combined canal. This will involve a head regulator and feeder channel for Mehma Minor and a head regulator for Kanianwali Distributary.

Cost Sharing and Costs to Punjab

18. The cost sharing involves only the combined canal; the re-connections are entirely at the expense of Punjab. The formula for cost sharing is based on the proportion of water carried on the combined canal for each state expressed in terms of "cusec miles." The length of the combined channel is 24.55 miles and the head discharge is 5105 cfs (of which 2964 cfs for Rajasthan and 2411 cfs for Punjab). The total cusec miles is 125,326, of which 78,206 for Rajasthan and 47,120 for Punjab. The total cost of the combined canal is estimated to be Rs 598.1 M. Therefore the cost per cusec mile is Rs 4772. Thus, Punjab's share of the total cost (Rs 598.1 M) is Rs 4772 x 47,120 = Rs 224.9 M. The additional cost to Punjab for connecting the two existing canals is Rs 3.9 M, giving a total cost of the project to be attributed to Punjab Rs 228.8 M.

D. Micro Hydroelectric Stations

Background

19. There are a about 40 regulation and bed control drops in the Punjab major canal system which have confirmed hydropower potential. Five of these are either completed or in progress. Of the 35 remaining, 17 are capable of supporting an installed capacity of more than one megawatt, and 15 of these sites coincide with sites scheduled for modernization of the structures. Ten of the most attractive sites which coincide with the program of control structure modernization are included in this project component.

20. The proposed microhydro stations will be built and operated by the Punjab State Electricity Board. Operation will depend on the irrigation service, generation will be a secondary function. A complete summary of the Punjab State Electricity Board's parameters and the forecast position is given in Table 1.

21. There are currently in excess of 164,000 agricultural and 4000 industrial connections pending, in the state with a total shortfall of over 900 MW.

Scope, Benefits and Costs

22. The ten stations selected as first priority are single falls supporting in excess of one megawatt and on sites which are scheduled for modernization of the regulation facilities. The sites are shown in Map IBRD 21801 and the

costs, production benefits and salient features of the stations are summarized in Table 2. The current cost of generation at the State's thermal stations is about Rs 87 per unit. All the selected sites have costs below this figure. The economic rate of return for this component is 25% if the alternative method of generation is assumed to be thermal.

Technical

23. The turbines will be horizontal Kaplan units with automatically regulated by-pass gates. The generated power will be fed into the grid via 33KV lines to the nearest substation. Three pilot stations have been constructed and are operating. All the equipment used in the pilot stations, apart from the gearboxes and some specialized control equipment, is manufactured in the Punjab.

E.Sutlej Yamuna Link Canal
Lift Canal Systems

Introduction

24. The Punjab reach of the Sutlej-Yamuna Li (SYL) canal is being constructed to convey up to 177 m^3/sec of water the Haryana State border to provide that state with its share of the waters rom the Ravi and Beas rivers. The SYL canal takes off from a headworks on the Nangal re-regulating pond at the head of the Bhakra Main Canal, and parallels that canal on its left bank to the vicinity of Morinda before taking a course in a generally south-easterly direction to the Haryana border.

25. Though Punjab has no share in the Ravi-Beas waters ex Nangal, the SYL canal within Punjab has been constructed for a capacity of 275 m^3/sec. Punjab proposes to use 25 m^3/sec of the capacity of SYL canal irrigate about 130,000 ha of land on either side of the canal in its te itory using 580 Mm^3 of water from surface water savings elsewhere in the State. The interlinkages of the canal and river systems in Punjab permit these water to be effectively transferred to the SYL canal.

26. As the reach of the SYL canal passing the areas proposed for irrigation is mainly in deep cut, pump lift schemes will be required to deliver the water from the canal to the proposed command areas. The command areas of six distributaries from the right bank of the SYL canal and of one distributary from the left bank will be served after a single lift from the canal. However, serving the total command areas of two branch canals taking off from the left bank will involve multi-stage pumping with as many as eight lifts to reach the most elevated parts of their commands. The Command area of the SYL project is shown on Map IBRD 21801.

27. The SYL canal is scheduled for completion to the Haryana border by June, 1990. Work has been started on all the lift systems, designs are almost complete and much of the land required has been acquired. In terms of expenditures, 44% of the estimated cost of the project in 19 prices had been expended by March 1989. GOP plans to be able to deliver water to part of the land served by single lifts at the time the SYL canal is commissioned to begin water deliveries to Haryana. The entire scheme is planned for completion in FY 1991/92.

Sources of Water for SYL Lift Schemes

28. As noted above, although Punjab has no share of the Ravi Beas water ex-Nangal, 580 Mm^3/yr will be required to irrigate the lands to be served by the lift schemes from the SYL canal. The proposed sources of the water are summarized below:

a. Unused allocation from the Bhakra-Nangal Project. In 1955, 138 Mm^3 was earmarked for irrigation of 36,000 ha in the Nangal-Ropar tract, but less than 10% of this water is presently being used in this area. It is proposed that the unused portion (123 Mm^3) will be allocated to the SYL lift schemes.

b. Savings from abandoned channels. A number channels on the Sirhind, UBDC, Bhakra and Bist Doab systems have been abandoned due to urbanization, releasing about 185 Mm^3.

c. Modernization of Badshahi Canal. After modernization (lining and reducing canal sections to reflect the current command area) of this old canal system, its water allowance will be reduced from the present 20 cfs/1000 acres to 7 cfs/1000 acres in part of the area and 3.5 cfs/1000 acres in the remaining area. The saving of about 31 Mm^3 will be made available on SYL Canal from Nangal headworks.

d. Modernization of Chakander Tract Irrigation System. The present water allowance in this tract is 15 cfs/1000 acres. After modernization, the allowance will be reduced to 7 cfs/1000 acres resulting in a saving of about 123 Mm^3 which will be used on SYL Canal.

e. Constructing a new lined channel to replace the Bikaner and Eastern Canals It is estimated that savings in seepage would allow 118 Mm^3 to be used on SYL Canal.

The total savings and developments from the above sources are 580 Mm^3 for the SYL lift schemes at full development. It should be noted that the proposed lining and modernization work would have to be completed by the end of 1991/92 to provide all the required water against the SYL requirement.

Basic Design Characteristics

29. Pump Stations The pump stations on the SYL will be off set from the canal with a water way from the canal which would have an entry crest 1.2 m higher than the bed level of the canal. Pumping will be by electrically powered, vertical turbine pumps. The power supply will be delivered by independent feeder lines from adjacent 33/11 kV transformer substations. Appropriate banks of pumps of varying capacities will be fitted in the pump stations.

30. Delivery Sumps. The sump receives the water from the pump station through pump stocks and regulates flow into the canal system. A spilling chamber is associated with the delivery sump and is capable of by-passing about 33% of the capacity of the canal and returning any excess to the pump

about 33% of the capacity of the canal and returning any excess to the pump sump through a return flow pipe.

31. Canal System. The channel system will be brick lined according to standard GOP practices with a cup shaped invert, 1.25:1 side slopes, and freeboard of 450 mm on branch canals and 300 mm on distributaries and minors. (see Annex 2 for more details). With multi-lift systems, the canals will be level topped to create storage and cater for pump breakdown or discharge mismatching and prevent spillage.

32. Head regulators Off-taking distributaries and minors will be provided with gated head regulators.

33. Escapes Escapes are provided as necessary at appropriate locations on the canal systems.

34. Watercourses These channels will be lined according to standard GOP practices (see Annex 2 for details). They will serve chaks of about 100 ha with ungated adjustable proportional modules (APM) at their heads and slide gated offtakes to 5.0 ha turnouts along their lengths.

35. Cross drainage structures Major cross drainage structures are required on the proposed alignments of the Upper Branch Canal and Lower Branch Canal systems.

36. Bridges A variety of bridges will be required to pass roads, foot traffic and railway across the canal system. Due to the small discharges in the canals, most of the road bridges will have the form of culvert structures.

37. Communications An independent telephone system will be provided to connect key locations on each system to its associated pump station(s). The pump stations from the SYL canal will have a P&T telephone line connection and will have wireless connection to the central control for the canal system of the State.

38. Operation Safety Controls Electric float switches will automatically switch off pumps at a pump station if water levels fall too low in the pump sump or exceed safe limits in the delivery sump. Pump stations in multistage systems will be electrically interlocked so that all stations close down in the event of any one of the stations becoming unserviceable.

Implementation Schedule, and Cost Estimates for Completion of Works.

39. Cost estimates are summarized below:

	Item	Year 1	Year 2	Year 3	Base Cost (Rs M)	Phys Cont. %	Total Cost (Rs M)
		- - - - Rs Million - - - -					
1	Preliminary	0.12	0.10	-	0.22	0.00	0.22
2	Land	12.801	10.00	-	22.80	10.00	25.08
3	Works	126.08	97.20	101.12	324.30	5.70	342.94
4	Tools & Plant	2.23	2.47	2.30	7.00	5.00	7.35
5	Establishment	13.57	7.00	7.21	27.80	5.00	29.17
	Totals	**154.80**	**116.78**	**110.63**	**382.20**		**404.26**

O&M Costs of Water Deliveries

40. Water deliveries to the command areas require between one and eight lifts, apart from an area served on the lower part of the Banour Canal which can be supplied directly under gravity from SYL canal. Total lifts range from 3.0m to 56m, and the total volume of water to be delivered to the systems is 580 Mm^3/yr.

41. Energy consumption on Lift Canal Systems. It is assumed that the energy requirement to lift 1.0 MCM through 1.0 m is 3300 KWH. This implies a wire-to-water efficiency of about 67% at the pump stations. On this basis, the total energy requirement at full development for the lift pumping stations will be about 47.7 GWH/yr.

42. O&M Cost Estimates. The estimates for annual recurrent costs for O&M of the lift schemes at full development are summarized below:

Item	Description	Unit	Unit cost (Rs,000)	Nos.	Total (Rs. M)
1.	Energy for lift pump	MWH	1,500	47,700	71.55
2.	Maintenance of systems	h	40	130,000	5.20
3.	Admin. and Supervision	ha	50	130,000	6.50
				Total	82.25

Thus, the total annual O&M cost is equivalent to about Rs 630/ha, based on an economic price of power of Rs 1.5/kwh.

INDIA

PUNJAB IRRIGATION AND DRAINAGE PROJECT

Cost Tables

INDIA
PUNJAB IRRIGATION AND DRAINAGE PROJECT
PROJECT COST SUMMARY

	(RS. '000)					(US$ '000)				
	Local	Foreign	Total	% Foreign Exchange	% Total Base Costs	Local	Foreign	Total	% Foreign Exchange	% Total Base Costs
A. MODERNIZATION OF CANALS AND INFRASTRUCTURE										
1. WATERCOURSES MODERNIZATION	521,743.1	27,460.2	549,203.2	5	16	31,620.8	1,664.3	33,285.0	5	16
2. CANALS MODERNIZATION	720,656.0	39,443.8	760,099.8	5	22	43,676.1	2,390.5	46,066.7	5	22
3. CANALS REGULATION MODERNIZATION	170,672.7	9,749.1	180,421.8	5	5	10,343.8	590.9	10,934.7	5	5
4. COMMUNICATIONS	63,314.0	6,686.0	70,000.0	10	2	3,837.2	405.2	4,242.4	10	2
5. FUTURE IRRIGATION DEVELOPMENT PROGRAM	329,000.0	21,000.0	350,000.0	6	10	19,939.4	1,272.7	21,212.1	6	10
Sub-Total MODERNIZATION OF CANALS AND INFRASTRUCTURE	1,805,385.7	104,339.1	1,909,724.8	5	56	109,417.3	6,323.6	115,740.9	5	56
B. KANDI AREA DEVELOPMENT										
1. KANDI CANAL COMPLETION	399,172.5	20,321.4	419,493.9	5	12	24,192.3	1,231.6	25,423.9	5	12
2. KANDI LOW DAMS	264,907.4	12,416.2	277,323.6	4	8	16,055.0	752.5	16,807.5	4	8
3. TUBEWELLS	199,993.6	15,595.8	215,589.4	7	6	12,120.8	945.2	13,066.0	7	6
Sub-Total KANDI AREA DEVELOPMENT	864,073.5	48,333.4	912,406.9	5	27	52,368.1	2,929.3	55,297.4	5	27
C. DRAINAGE										
1 SURFACE DRAINAGE	359,661.4	17,468.5	377,129.8	5	11	21,797.7	1,058.7	22,856.4	5	11
2. SUB-SURFACE DRAINAGE	90,383.1	4,109.0	94,492.1	4	3	5,477.8	249.0	5,726.8	4	3
Sub-Total DRAINAGE	450,044.5	21,577.5	471,621.9	5	14	27,275.4	1,307.7	28,583.1	5	14
D. STUDIES AND INSTITUTIONAL DEVELOPMENT										
1. STUDIES	38,483.0	25,944.0	64,427.0	40	2	2,332.3	1,572.4	3,904.7	40	2
2. TRAINING	56,131.8	4,523.3	60,655.0	7	2	3,401.9	274.1	3,676.1	7	2
Sub-Total STUDIES AND INSTITUTIONAL DEVELOPMENT	94,614.8	30,467.3	125,082.0	24	4	5,734.2	1,846.5	7,580.7	24	4
Total BASELINE COSTS	3,214,118.5	204,717.2	3,418,835.7	6	100	194,795.1	12,407.1	207,202.2	6	100
Physical Contingencies	240,199.4	12,951.1	253,150.5	5	7	14,557.5	784.9	15,342.5	5	7
Price Contingencies	854,459.1	70,243.4	924,702.5	8	27	21,717.9	2,250.2	23,968.1	9	12
Total PROJECT COSTS	4,308,777.0	287,911.6	4,596,688.7	6	134	231,070.5	15,442.2	246,512.7	6	119

November 27, 1989 17:04

Annex 13
Table 1

Annex 13
Table 2

INDIA
PUNJAB IRRIGATION AND DRAINAGE PROJECT
SUMMARY ACCOUNTS COST SUMMARY

	(RS '000)					(US$ '000)				
	Local	Foreign	Total	% Foreign Exchange	% Total Base Costs	Local	Foreign	Total	% Foreign Exchange	% Total Base Costs
I. INVESTMENT COSTS										
A CIVIL WORKS										
1. LAND ACQUISITION	115,579 6		115,579 6		3	7,004 8		7,004 8		3
2 PRELIMINARY	7,278 0	431 5	7,709 5	6	0	441 1	26 1	467 2	6	0
3 CONSTRUCTION WORKS	2,871,825 8	156,945 9	3,028,771 8	5	89	174,050 1	9,511 9	183,561 9	5	89
Sub-Total CIVIL WORKS	2,994,683 4	157,377 4	3,152,060 9	5	92	181,496 0	9,538 0	191,034 0	5	92
B VEHICLES	1,800 0	200 0	2,000 0	10	0	109 1	12 1	121 2	10	0
C. MACHINERY AND EQUIPMENT - CONSTRUCTION	103,012 0	11,445 8	114,457 8	10	3	6,243 2	693 7	6 936 8	10	3
D. MACHINERY AND EQUIPMENT - OTHER	78,300 0	8,700 0	87,000 0	10	3	4,745 5	527 3	5,272 7	10	3
E STUDIES	29,487 0	25,000 0	54,487 0	46	2	1,787 1	1,515 2	3,302 2	46	2
F TRAINING	2,446 0	1,994 0	4,440 0	45	0	148 2	120 8	269 1	45	0
G STAFF COSTS	4,390 0		4,390 0	-	0	266 1		266 1		0
Total BASELINE COSTS	3,214,118 5	204,717 2	3,418,835 7	6	100	194,795 1	12,407 1	207,202 2	6	100
Physical Contingencies	240,199 4	12,951 1	253,150 5	5	7	14,557 5	784 9	15,342 5	5	7
Price Contingencies	854,459 1	70,243 4	924,702 5	8	27	21,717 9	2,250 2	23,968 1	9	12
Total PROJECT COSTS	4,308,777 0	287,911 6	4,596,688 7	6	134	231,070 5	15,442 2	246,512 7	6	119

November 27, 1989 17 04

INDIA
PUNJAB IRRIGATION AND DRAINAGE PROJECT
Table 1 WATERCOURSE MODERNIZATION
Detailed Cost Table
(RS '000)

	Unit	Quantity 90/91	91/92	92/93	93/94	94/95	95/96	96/97	Total	Unit Cost	Base Costs 90/91	91/92	92/93	93/94	94/95	95/96	96/97	Total
I INVESTMENT COSTS																		
A. SURVEY	NOS. W/C	42 1	65 9	89 8	84 8	66 3	49 7	27 5	426	1 342	56 5	88 4	120 4	113 8	88 9	66 6	37 0	571 7
B CONSTRUCTION WORKS																		
NAKKAS	NOS W/C	42 1	65 9	89 8	84 8	66 3	49 7	27 5	426	45 746	1,925 1	3,014 5	4,105 9	3,879 5	3,031 0	2,271 7	1,260 1	19,487 8
BRIDGES	NOS W/C	42 1	65 9	89 8	84 8	66 3	49 7	27 5	426	23 219	977 1	1,530 1	2,084 0	1,969 1	1,538 4	1 153 0	639 6	9,891 3
BUILDINGS	LS	-	-	-			-				420 3	477 4	137 4	46 6	14 1	3 5	0 6	1,100 0
EARTHWORKS	NOS W/C	42 1	65 9	89 8	84 8	66 3	49 7	27 5	426	37 379	1,573 0	2,463 2	3,354 9	3,169 9	2,476 6	1,856 2	1,029 6	15,923 5
LINING	NOS W/C	42 1	65 9	89 8	84 8	66 3	49 7	27 5	426	1,010 676	42,531 5	66,600 9	90,712 2	85,710 0	66,965 0	50 188 5	27,839 9	430,548 0
MAINTENANCE DURING CONSTRUCTION	LS		-								142 9	222 0	301 3	284 5	221 8	166 3	94 2	1,433 0
ENGINEERING	LS		-			-					10,035 4	10,035 4	10,035 4	10,035 4	10,035 4	10,035 4	10,035 4	70,248 0
Sub-Total CONSTRUCTION WORKS											57,605 3	84,343 6	110,731 1	105,095 1	84,282 5	65,674 5	40,899 4	548 631 5
Total INVESTMENT COSTS											57 661 7	84,432 0	110,851 6	105,208 9	84,371 4	65,741 2	40,936 4	549,203 2
Total											57,661 7	84,432 0	110 851 6	105,208 9	84,371 4	65,741 2	40,936 4	549,203 2

November 27, 1989 17 03

INDIA
PUNJAB IRRIGATION AND DRAINAGE PROJECT
CANAL MODERNIZATION-BRANCH CANALS
Detailed Cost Table
(RS '000)

		Quantity									Base Costs							
	Unit	90/91	91/92	92/93	93/94	94/95	95/96	96/97	Total	Unit Cost	90/91	91/92	92/93	93/94	94/95	95/96	96/97	Total
I INVESTMENT COSTS																		
A. CIVIL WORKS																		
1. SURVEYS / PRELIMINARY	LS	-	-	-	-	-	-	-	-		24.3	38.0	51.5	48.7	38.2	28.5	15.9	245.2
2 REGULATORS	No	13.2	20.9	28.5	27	20.9	15.5	9	135	29	382.3	606.3	827.0	782.5	606.8	450.3	259.8	3,915.0
3. FALLS	No	10.7	17	23.3	22.7	15.5	9.2	8.6	107	122	1,306.3	2,078.2	2,840.6	2,765.1	1,890.0	1,126.7	1,047.0	13,054.0
4. BRIDGES	No	17.4	26.6	34.7	32.5	25.9	19.4	10.5	167	53	919.6	1,411.4	1,841.3	1,724.1	1,372.0	1,025.9	556.7	8,851.0
5. EARTHWORKS																		
SALINE GROUNDWATER	100m3	4,581.4	6,970.6	9,290.9	8,812.9	6,998.6	5,316.2	3,133.4	45,104	0.9	4,123.3	6,273.5	8,361.8	7,931.6	6,298.8	4,784.6	2,820.1	40,593.6
WATERLOGGED AREAS	100m3	472.6	742.3	1,002.9	949.2	745.5	555.8	309.7	4,778	0.9	425.3	668.0	902.6	854.3	671.0	500.2	278.7	4,300.2
PROBLEM MAINTENANCE	100m3	4,495.4	7,051	9,534.8	9,023.3	7,080.8	5,280.6	2,945	45,411	0.9	4,045.9	6,345.9	8,581.3	8,120.9	6,372.8	4,752.5	2,650.5	40,869.9
Sub-Total EARTHWORKS											8,594.5	13,287.5	17,845.8	16,906.8	13,342.5	10,037.4	5,749.3	85,763.7
6 LINING																		
SALINE GROUNDWATER	100m2	2,172.6	3,408.4	4,608.1	4,361	3,422.7	2,552.3	1,423.9	21,949	6.5	14,121.8	22,154.6	29,952.4	28,346.5	22,247.9	16,589.9	9,255.4	142,688.5
WATERLOGGED AREAS	100m2	245	383.5	518.9	491	385.2	287.7	160.6	2,472	6.5	1,592.8	2,493.0	3,372.8	3,191.4	2,504.1	1,870.3	1,043.6	16,068.0
PROBLEM MAINTENANCE	100m2	2,375.7	3,721.5	5,012.4	4,743.3	3,745.1	2,802.6	1,546.5	23,947	6.5	15,442.1	24,189.7	32,580.6	30,831.4	24,343.1	18,216.6	10,052.0	155,655.5
Sub-Total LINING											31,156.7	48,837.3	65,905.8	62,369.3	49,095.1	36,676.8	20,351.0	314,392.0
7. MISCELLANEOUS BUILDINGS	LS	-	-	-	-	-	-	-	-		391.5	614.2	830.5	785.9	616.8	460.0	256.6	3,955.4
8 MAINTENANCE DURING CONSTRUCTION	LS	-	-	-	-	-	-	-	-		213.1	334.2	452.0	427.7	335.7	250.4	139.6	2,152.6
9 ENGINEERING AND OH	LS	-	-	-	-	-	-	-	-		6,747.6	10,585.3	14,312.4	13,544.7	10,630.4	7,928.0	4,422.1	68,170.5
Sub-Total CIVIL WORKS											49,735.9	77,792.5	104,906.9	99,354.8	77,927.4	57,983.9	32,798.0	500,499.4
Total INVESTMENT COSTS											49,735.9	77,792.5	104,906.9	99,354.8	77,927.4	57,983.9	32,798.0	500,499.4
Total											49,735.9	77,792.5	104,906.9	99,354.8	77,927.4	57,983.9	32,798.0	500,499.4

November 27, 1989 17 03

Annex 13
Table 4

INDIA
PUNJAB IRRIGATION AND DRAINAGE PROJECT
CANAL MODERNIZATION-PERENNIAL DISTRIBUTARIES AND MINORS
Detailed Cost Table
(RS '000)

	Unit	Quantity 90/91	91/92	92/93	93/94	94/95	95/96	96/97	Total	Unit Cost	Base Costs 90/91	91/92	92/93	93/94	94/95	95/96	96/97	Total
I. INVESTMENT COSTS																		
A. CIVIL WORKS																		
1. SURVEYS / PRELIMINARY	LS	-	-	-	-	-	-	-	-		28 6	23 6	19 1	17 3	19 3	20 1	15 0	143 0
2. LAND	LS	-	-	-	-	-	-	-	-		1,019.5	864 1	700 9	636 9	521 7	330 3	270 7	4,344 0
3. REGULATORS	No	1 7	2.5	2 6	2 6	2 3	1 6	1.7	15	29	47.9	71 1	75 6	76 6	66 8	46.8	50 2	435 0
4. FALLS	No	0.9	0.9	0.9	0.9	0.9	0 9	0.9	6	122	104 6	104 6	104 6	104 6	104 6	104 6	104 6	732.0
5. BRIDGES	No	2 5	3 3	3 4	3.9	4 2	3 2	2 5	23	52	132 8	176 6	178.3	206 9	221 9	168 3	134 2	1,219 0
6. EARTHWORKS																		
SALINE GROUNDWATER	100m3	456 6	460 1	463 1	454 4	444 4	412 8	345.5	3,037	0 9	411 0	414 1	416 8	409 0	400 0	371 5	311 0	2,733 3
WATERLOGGED AREAS	100m3	2,299.9	2,386 8	2,411.9	2,388 6	2,430.9	2,344.1	1,986.8	16,249	0 9	2,069.9	2,148.1	2,170.7	2,149 7	2,187.8	2,109 7	1,788.1	14,624 1
PROBLEM MAINTENANCE	100m3	190 3	190	191 4	189.2	194 4	181 8	128 8	1,266	0 9	171.3	171 0	172 3	170 3	174.9	163 6	115 9	1,139 4
Sub-Total EARTHWORKS											2,652.2	2,733.3	2,759.8	2,729 0	2,762.8	2,644 8	2,215 0	18,496 8
7. LINING																		
SALINE GROUNDWATER	100m2	189 3	202 9	215 2	215 7	206 6	199 6	200 7	1,430	6 5	1,230 7	1,318 7	1,398 5	1,401 7	1,343.0	1,297 6	1,304 7	9,295 0
WATERLOGGED AREAS	100m2	1,008.3	1,078 5	1,144 3	1,144	1,095.1	1,058.8	1,057 1	7,586	6 9	6,553.8	7,010.0	7,437 8	7,436 0	7,118 1	6,882 4	6,871 0	49,309.0
PROBLEM MAINTENANCE	100m2	79 3	85	90 3	89 8	85 8	83 7	84	598	6 5	515 6	552 4	586.9	583 7	557.8	544 3	546 3	3,887 0
Sub-Total LINING											8,300.1	8,881.1	9,423.2	9,421 4	9,018.9	8,724 3	8,722 0	62,491.0
8 MISCELLANEOUS BUILDINGS	LS	-	-	-	-	-	-	-	-		716 8	853 3	751 0	274 6	19.7	58 2	26 4	2,700 0
9. MAINTENANCE DURING CONSTRUCTION	LS	-		-	-	-	-	-	-		51.4	55 6	51 4	64 0	70 2	75.9	68 4	447 0
10. ENGINEERING AND OH	LS	-	-	-	-	-	-	-	-		1,728.2	1,848.8	1,961 2	1,960 6	1,876 2	1,813 3	1,811 6	13,000.0
Sub-Total CIVIL WORKS											14,782 1	15,612.1	16,035.0	15,491.9	14,682 1	13,986.5	13,418 1	104,007.8
Total INVESTMENT COSTS											14,782.1	15,612 1	16,035 0	15,491 9	14,682 1	13,986 5	13,418 1	104,007 8
Total											14,782 1	15,612 1	16,035 0	15,491 9	14,682 1	13,986 5	13,418 1	104,007 8

November 27, 1989 17.03

Annex 13
Table 5

INDIA
PUNJAB IRRIGATION AND DRAINAGE PROJECT
CANAL MODERNIZATION NON PERENNIAL DISTRIBUTARIES AND MINORS
Detailed Cost Table
(RS '000)

	Unit	Quantity 90/91	91/92	92/93	93/94	94/95	95/96	96/97	Total	Unit Cost	Base Costs 90/91	91/92	92/93	93/94	94/95	95/96	96/97	Total
I. INVESTMENT COSTS																		
A. CIVIL WORKS																		
1 SURVEYS / PRELIMINARY	LS	-	-	-	-		-	-	-		46 5	37 9	29 6	28 1	31 7	31 1	24 1	229 0
2. REGULATORS REHAB	No	5 1	5 8	6 2	5 5	5	5 2	5 1	38	29	147 5	169 6	178 9	160 9	146 3	149 9	149 0	1,102 0
3. FALLS REHAB	No	1 7	1 6	2 4	2 2	1 6	1 7	1 7	13	122	211 7	194 0	293 1	272 8	192 8	213 2	208 5	1 586 0
4 BRIDGES	No	6	6	6	6	6	6	6	42	53	318 0	318 0	318 0	318 0	318 0	318 0	318 0	2,226 0
5 EARTHWORKS																		
SALINE GROUNDWATER	100m3	1,265	1,353	1,435 1	1,435 5	1,371	1,328 5	1,345 8	9,534	0 9	1,138 0	1,217 7	1 291 6	1,292 0	1,233 9	1,195 7	1,211 2	8,580 6
WATERLOGGED AREAS	100m3	1,858 2	1,983 4	2,102 7	2,103 6	2,012 5	1,943 9	1,944 7	13,949	0 9	1,672 4	1,785 1	1,892 4	1,893 3	1,811 2	1,749 5	1,750 3	12,554 1
PROBLEM MAINTENANCE	100m3	469 2	501 8	532 4	532 8	510	492 7	492 1	3,531	0 9	422 2	451 6	479 2	479 5	459 0	443 4	442 9	3,177 9
Sub-Total EARTHWORKS											3,233 1	3,454 4	3,663.2	3,664 7	3,504 2	3,388 6	3,404 4	24,312 6
6 LINING																		
SALINE GROUNDWATER	100m2	692 6	741	785 4	785 5	751 9	726 5	727 2	5,210	6 5	4,502 1	4,816 4	5,105 0	5,105 7	4,887 2	4,722 1	4,726 6	33,865 0
WATERLOGGED AREAS	100m2	1,014 2	1,085 2	1,151 1	1,151 1	1,101 2	1,064 2	1,065	7,632	6 5	6,592 3	7,053 8	7,482 3	7,482 1	7,157 9	6,917 0	6,922 5	49,608 0
PROBLEM MAINTENANCE	100m2	256 8	274 5	290 9	291 2	278 9	269 5	270 1	1,932	6 5	1,669 0	1,784 5	1,891 1	1,893 0	1,812 8	1,751 7	1,755 9	12,558 0
Sub-Total LINING											12,763 4	13,654 7	14,478 3	14,480 8	13,857 9	13,390 8	13,405 0	96,031 0
7 MISCELLANEOUS BUILDINGS	LS	-			-	-	-		-		860 9	1,024 8	901 5	330 3	22 0	70 5	29 9	3,240 0
8 MAINTENANCE DURING CONSTRUCTION	LS	-		-		-	-	-			77 2	83 6	91 6	97 4	100 9	106 4	113 9	671 0
9. ENGINEERING AND OH	LS	-	-	-	-	-			-		3,481 6	3,724 5	3,949.9	3,950 1	3,780 0	3,653 2	3,655 6	26,195 0
Sub-Total CIVIL WORKS											21,140 0	22,661 5	23,904 2	23,303 1	21,953 7	21,321 8	21,308 5	155,592 6
Total INVESTMENT COSTS											21,140 0	22,661 5	23,904 2	23,303 1	21,953 7	21,321 8	21,308 5	155,592 6
Total											21,140 0	22,661 5	23,904 2	23,303 1	21,953 7	21,321 8	21,308 5	155,592 6

November 27, 1989 17.03

Annex 13
Table 6

INDIA
PUNJAB IRRIGATION AND DRAINAGE PROJECT
MODERNIZATION OF CANAL REGULATION SYSTEM
Detailed Cost Table
(RS '000)

	Unit	Quantity 90/91	91/92	92/93	93/94	94/95	95/96	96/97	Total	Unit Cost	Base Costs 90/91	91/92	92/93	93/94	94/95	95/96	96/97	Total
I. INVESTMENT COSTS																		
A. SURVEY AND INVESTIGATION	LS	-	-	-	-	-	-	-		.	325 0	510 1	689 5	652 6	512 0	381 4	213 3	3,284 0
B. CONSTRUCTION																		
CROSS REGULATORS	No	7.4	12 3	16 8	15 9	12 4	9 4	5.7	80	927	6,829 5	11,445 6	15,601 0	14,734 7	11,533 3	8,694 3	5,321 5	74,160 0
HEAD REGULATORS AND FLUMES	No	14 8	24 2	31 5	29 3	23 7	17 7	8 8	150	309	4,560 9	7,470 2	9,736 9	9,067 3	7,331 0	5,471 2	2,712 4	46,350 0
ESCAPES	No	9 1	14 1	18 6	17 6	14 3	10 8	5 6	90	233	2,116 2	3,275.5	4,324 0	4,092 1	3,327 6	2,525 5	1,309 1	20,970 0
BUILDINGS/STORES	LS	-		-	-	-		-	-		131 1	205 8	278 0	263 1	206 7	154 3	83 9	1,325 0
ENGINEERING AND OH	LS			-	-	-	-				1,944 6	3,055 4	4,127 3	3,907 5	3,057 9	2,300 0	1,379 3	19,772 0
Sub-Total CONSTRUCTION											15,582 3	25,452 4	34,067 3	32,064 8	25,456 6	19,[illegible]5 4	10,808 2	162,577 0
C. MACHINERY AND EQUIPMENT																		
1. CONSTRUCTION EQUIPMENT																		
CONCRETE MIXERS	NO	4 1	5 2	7 7	7 9	3 5	0 6	0 1	29	21 45	86 9	111 8	164 7	168 4	76 0	12 2	2 0	622 1
PORTABLE PUMPS	NO	4 1	5 2	7 7	7 9	3 5	0 6	0 1	29	16 5	66 9	86 0	126 7	129 6	58 5	9 3	1 6	478 5
SHEEPS FOOT ROLLERS	NO	3 2	4 5	6 2	6 4	3 1	0 5	0 1	24	24 75	79 2	111 0	153 6	158 9	76 8	12 4	2 1	594 0
AIR COMPRESSORS	NO	0 9	0 7	1 5	1 4	0 4	0 1	0	5	330	282 0	238 0	488 0	473 6	144 1	20 8	3 5	1,650 0
VIBRATORS	NO	0 7	2 3	2 7	2 6	2 4	1 5	0.8	13	14 85	10 9	34 5	39 7	38 5	35 2	22 1	12 1	193 1
PNEUMATIC TOOLS	NO	0 7	2 2	2 5	2 6	1 7	0 3	0	10	21 45	14 8	47 3	52 9	56 8	35 6	6 0	1 0	214 5
PLATE COMPACTORS	NO	0 7	2 2	2 5	2 6	1 7	0 3	0	10	49 5	34 2	109 2	122 1	131 0	82 3	13 9	2 3	495 0
WELDING SETS	NO	0 1	0 7	0 8	0 8	0 5	0 1	0	3	132	7 4	87 8	106 3	110 5	70 2	11 8	2 0	396 0
MISC. WORKSHOP EQUIPMENT	LS	-	-	-	-			-	-		8 3	12 0	15 2	20 8	18 3	7 3	5 1	87 0
Sub-Total CONSTRUCTION EQUIPMENT											590 7	837 6	1,269 1	1,288 1	597 0	115 9	31 6	4,730 1
2 INSTALLED EQUIPMENT																		
AUTO GATE/LEVEL RECORDERS	NO	4 9	8 6	11 1	10 5	8 6	6 1	3 2	53	26 4	128 8	225 9	292 1	278 3	227 6	161 4	85 1	1,399 2
Sub-Total INSTALLED EQUIPMENT											128 8	225 9	292 1	278 3	227 6	161 4	85 1	1,399 2
3. CONSTRUCTION VEHICLES																		
CAR	NO	0 1	0 7	0 9	0 8	0 9	0 7	0 1	4	165	9 4	113 3	144 2	126 1	144 2	113 3	9 4	660 0
4 WHEEL DRIVE	NO	1 5	2 9	3 9	4 1	2 1	0 3	0 1	15	148 5	227 9	436 1	585 0	605 9	312 9	51 3	8 5	2,227 5
TRUCKS	NO	1 6	2 2	3 1	3 2	1.6	0.3	0	12	330	528 2	740 2	1,023 7	1,059 1	512 0	83 0	13 8	3,960 0
AGRIC. TRACTORS	NO	0 7	2 3	2 6	2 5	2 4	1 3	0.1	12	132	95 3	301 1	348 1	333 6	316 1	176 3	13 6	1,584 0
Sub-Total CONSTRUCTION VEHICLES											860 8	1,590 6	2,101 0	2,124 7	1,285 2	423 8	45 4	8,431 5
Sub-Total MACHINERY AND EQUIPMENT											1,580 2	2,654 2	3,662 2	3,591 1	2,109 9	701 1	162 1	14,560 8
Total INVESTMENT COSTS											17,487 5	28,616 7	38,419 0	36,408 5	28,[illegible] 5	20,227 9	11,183 7	180,421 8
Total											17,487 5	28,616 7	38,419 0	36 408 5	28,078 5	20,227 9	11,183 7	180,421 8

November 27, 1989 17:04

Annex 13
Table 7

INDIA
PUNJAB IRRIGATION AND DRAINAGE PROJECT
COMMUNICATIONS
Detailed Cost Table
(Rs '000)

	Unit	Quantity 90/91	91/92	92/93	93/94	94/95	95/96	96/97	Total	Unit Cost	Base Costs 90/91	91/92	92/93	93/94	94/95	95/96	96/97	Total	Parameters Phy Cont Rate	for Exch	Gross Tax Rate	Summary Account
I INVESTMENT COSTS																						
A. CIVIL WORKS											1,587 7	3,121 5	1,396 9	114 5	46 1	11 4	1 9	6,280 0	0 05	0 05	0 02	CONX
B. COMMUNICATIONS EQUIPMENT																						
TEN TONA SYSTEMS	LS										8,463 7	35,534 1	14,459 6	2,377 5	2,314 5	489 0	81 5	63,720 0	0	0 1	0 02	MEO
Sub-Total COMMUNICATIONS EQUIPMENT											8,463 7	35,534 1	14,459 6	2,377 5	2,314 5	489 0	81 5	63,720 0				
Total INVESTMENT COSTS											10,051 4	38,655 6	15,856 5	2,491 9	2,360 6	500 4	83 4	70,000 0				
Total											10,051 4	38,655 6	15,856 5	2,491 9	2,360 6	500 4	83 4	70,000 0				

November 27, 1989 17 04

Annex 13
Table 8

INDIA
PUNJAB IRRIGATION AND DRAINAGE PROJECT
FUTURE IRRIGATION DEVELOPMENT PROGRAMS
Detailed Cost Table
(RS. '000)

	Unit	Quantity 90/91	91/92	92/93	93/94	94/95	95/96	96/97	Total	Unit Cost	Base Costs 90/91	91/92	92/93	93/94	94/95	95/96	96/97	Total	Parameters Phy. Cont Rate	for. Exch	Gross Tax Rate	Summary Account
I. INVESTMENT COSTS																						
A. CIVIL WORKS		-	-	-	-	-	-	-	-		46,873.9	46,762.3	47,244.1	45,582.9	50,296.9	39,908.9	3,331.1	280,000.0	0.05	0.05	0.02	CONX
B. MACHINERY AND EQUIPMENT		-	-	-	-	-	-	-	-		11,718.5	11,690.6	11,811.0	11,395.7	12,574.2	9,977.2	832.8	70,000.0	0.05	0.1	0.02	MEQ
Total INVESTMENT COSTS											58,592.3	58,452.9	59,055.1	56,978.6	62,871.1	49,886.2	4,163.8	350,000.0				
Total											58,592.3	58,452.9	59,055.1	56,978.6	62,871.1	49,886.2	4,163.8	350,000.0				

November 27, 1989 17:04

Annex 13
Table 9

INDIA
PUNJAB IRRIGATION AND DRAINAGE PROJEC
SURFACE DRAINAGE WORKS
Detailed Cost Table
(RS '000)

	Unit	Quantity 90/91	91/92	92/93	93/94	94/95	95/96	96/97	Total	Unit Cost	Base Costs 90/91	91/92	92/93	93/94	94/95	95/96	96/97	Total
I. INVESTMENT COSTS																		
A. PRELIMINARY AND LAND																		
1. PRELIMINARY	KM	71.5	116 1	157 3	148 7	116 9	86 8	48 7	746	0.4	28 6	46 5	62 9	59 5	46 7	34 7	19 5	298 4
2. LAND	ACRE	193 4	309 9	420 2	397 3	311 9	232 6	129 7	1,995	28 5	5,511 0	8,832 7	11,976 2	11,321 9	8,889 5	6,628 7	3,697 6	56,857 5
Sub-Total PRELIMINARY AND LAND											5,539 6	8,879 1	12,039 1	11,381 4	8,936 3	6,663 4	3,717 0	57,155 9
B. CONSTRUCTION																		
1. CROSS DRAINAGE WORKS																		
WATER COURSE CROSSING	RFT	1,974 6	3,097 8	4,188 2	3,963 6	3,110 9	2,319 7	1,294 2	19,949	1 06	2,093 1	3,283 7	4,439 4	4,201 4	3,297 5	2,458 9	1,371 8	21,145 9
INLETS	NOS	10 8	15 7	20 9	19 9	15 6	11 5	5 6	100	12	129 8	187 8	251 3	238 4	187 8	138 1	66 8	1,200 0
DRAINAGE CROSSINGS	RFT	833	1,307 4	1,767 8	1,672 8	1,313 4	980	545 6	8,420	4 4	3,665 4	5,752 4	7,778 5	7,360 4	5,778 9	4,311 9	2,400 5	37,048 0
HUME PIPE CROSSING	NOS	1 7	2 3	3 4	2 9	2 9	3 2	0 7	17	40	67 0	92 3	134 9	116 3	116 3	127 1	26 1	680 0
Sub-Total CROSS DRAINAGE WORKS											5,955 3	9,316 3	12,604 1	11,916 5	9,380 5	7,035 9	3,865 3	60,073 9
2. BRIDGES AND CULVERTS																		
VILLAGE ROAD BRIDGE	NOS	33 1	50 5	68 7	64 8	51 1	38 7	20 1	327	180	5,958 7	9,087 5	12,372 9	11,667 5	9,190 4	6,971 6	3,611 4	58,860 0
VILLAGE ROAD HUME CROSSING	NOS	10 7	17	23 4	22 3	16 6	11 6	7 4	109	39	417 8	663 3	912 5	869 4	646 2	452 1	289 9	4,251 0
DISTRICT ROAD BRIDGE	NOS	2 5	3 8	5 8	5 3	3 9	3 1	1 6	26	825	2,054 6	3,123 9	4,763 3	4,398 8	3,202 9	2,590 0	1,318 6	21,450 0
RAILWAY BRIDGE	NOS	0 9	0 7	1 5	1 4	0 4	0 1	0	5	1,615	1,380 1	1,164 8	2,388 2	2,317 8	705 2	101 9	17 0	8,075 0
RAILWAY CULVERT	NOS	0 9	0 8	1 4	1 9	1 4	0 8	0 9	8	3	2 6	2 3	4 2	5 7	4 2	2 3	2 6	24 0
Sub-Total BRIDGES AND CULVERTS											9,813 8	14,041 9	20,441 1	19,257 1	13,748 8	10,117 9	5,239 4	92,660 0
3. EARTHWORKS	M CU FT	38 9	59 3	79 4	76 6	56	35 6	23 2	369	280	10,887 4	16,594 6	22,219 9	21,460 4	15,685 4	9,970 9	6,501 3	103,320 0
4. MAINTENANCE DURING CONSTRUCTION /a		-	-	-	-	-	-	-	-	-	222 9	310 6	439 7	483 8	414 3	305 8	227 4	2,404 5
5. BUILDINGS																		
EE HOUSE	NOS	0 1	0 6	0 2	0 1	0	0	0	1	180	9 9	106 1	43 3	14 9	4 5	1 1	0 2	180 0
SDO HOUSES	NOS	0 1	0 6	0 2	0 1	0	0	0	1	140	7 7	82 5	33 7	11 6	3 5	0 9	0 1	140 0
SENIOR QUARTERS	NOS	0	0 6	0 9	0 3	0 1	0	0	2	95	4 6	57 7	84 1	33 2	8 1	2 0	0 3	190 0
JUNIOR QUARTERS	NOS	0	0 6	0 9	0 3	0 1	0	0	2	75	3 7	45 5	66 4	26 2	6 4	1 6	0 3	150 0
CLASS IV QUARTERS	NOS	0	0 6	1 5	1 3	0 8	0 7	0 1	5	45	1 7	26 1	69 7	57 5	34 2	32 9	2 9	225 0
DIVISIONAL OFFICE	NOS	0	0 6	0 9	0 3	0 1	0	0	2	24	1 2	14 6	21 2	8 4	2 0	0 5	0 1	48 0
PUMP HOUSE	NOS	0	0 1	0 4	1 4	1 8	0 3	0 1	4	24	0 3	2 1	8 4	32 8	43 2	7 8	1 3	96 0
INSPECTION HUTS	NOS	0 8	1 4	2 5	1 9	0 3	0	0	7	50	40 5	71 4	125 7	92 8	17 3	2 0	0 3	350 0
TEMPORARY BUILDINGS	NOS	0 1	0 7	0 8	0 8	0 5	0 1	0	3	160	9.0	106 4	128 8	133 9	85 1	14 4	2 4	480 0
Sub-Total BUILDINGS											78 6	512 3	581 3	411 4	204 4	63 2	7 9	1,859 0
Sub-Total CONSTRUCTION											26,958 1	40,775 7	56,286 1	53,529 2	39,433 5	27,493 7	15,841 2	260,317 4
C. ADMINISTRATION AND ENGINEERING SUPERVISION /b											2,814 7	3,960 0	5,603 5	6,153 1	5,265 6	3,882 3	2,880 3	30,559 5
D MACHINERY AND EQUIPMENT-CONSTRUCTION																		
POCLAIN 1 25 M3 CAP	NOS	0 1	0 7	0 8	0 8	0 5	0 1	0	3	3,867	216 8	2,572 6	3,112 8	3,236 1	2,055 8	348 0	58 0	11,601 0
VERTICAL TURBINE PUMPS	NOS	0 8	0 8	0 8	0 9	0 6	0 1	0	4	60	49 0	49 4	47 4	54 4	33 3	5 6	0 9	240 0
CONCRETE MIXERS	NOS	0	0 6	0 9	0 3	0 1	0	0	2	60	2 9	36 4	53 1	21 0	5 1	1 3	0 2	120 0
CENTRIFUGAL DIESEL PUMP SETS	NOS	3 2	5 3	7 4	6 9	5 4	3 5	0 3	32	14 5	46 8	76 6	107 5	100 4	78 6	50 1	4 0	464 0
CENTRIFUGAL ELECTRIC PUMP SETS	NOS	2 4	3 8	5 6	5 7	4 6	2 7	0 2	25	12	29 3	45 0	66 7	68 5	55 4	32 6	2 6	300 0
GENERATORS-1500 WATS	NOS	0 8	0 8	0 8	0 9	0 6	0 1	0	4	18	14 7	14 8	14 2	16 3	10 0	1 7	0 3	72 0
Sub-Total MACHINERY AND EQUIPMENT-CONSTRUCTION											358 5	2,794 9	3,401 7	3,496 5	2,239 2	439 2	66 0	12,797 0
E. MACHINERY AND EQUIPMENT-OTHER																		
MISCELLANEOUS OFFICE EQUIPMENT	LOT	0 8	0 1	0 1	0	0	0	0	1	3,000	2,414 9	334 4	165 5	61 3	18 6	4 6	0 8	3,000 0
DRAGLINE .75 CYD FOR MAINT	NOS	0 1	0 4	2 3	1 7	0 4	0 1	0	5	2,500	169 3	1,016 1	5,629 9	4,269 4	1,098 1	271 9	45 3	12,500 0
Sub-Total MACHINERY AND EQUIPMENT-OTHER											2 584 2	1 350 4	5 795 3	4,330 8	1,116 7	276 5	46 1	15,500 0
F VEHICLES																		

Annex 13
Table 10

INDIA
PUNJAB IRRIGATION AND DRAINAGE PROJECT
SUBSURFACE DRAINAGE WORKS ON 5000 HA
Detailed Cost Table
(RS '000)

	Unit	Quantity 90/91	91/92	92/93	93/94	94/95	95/96	96/97	Total	Unit Cost	Base Costs 90/91	91/92	92/93	93/94	94/95	95/96	96/97	Total
I. INVESTMENT COSTS																		
A. PRELIMINARY AND LAND																		
PRELIMINARY	PER 1000 HA	0 4	0 6	0 8	0 8	0 6	0 5	0 2	4	63	26 1	39 3	52 8	50 1	39 4	29 1	15 2	252 0
LAND	ACRE	42 9	66 8	90 6	85 7	67 1	50 5	28.4	432	28 5	1,223 8	1,902 5	2,582 4	2,441 4	1,912 8	1,439 7	809 5	12,312 0
Sub-Total PRELIMINARY AND LAND											1,249 9	1,941 8	2,635.3	2,491.4	1,952 1	1,468 8	824 7	12,564 0
B CONSTRUCTION WORKS																		
1. EARTHWORKS	100M3	195 5	306 8	414 1	392	308	229 5	128 1	1,974	7 2	1,407 4	2,208.7	2,981.7	2,822 7	2,217 6	1,652 1	922 6	14,212 8
2. DRAINAGE SYSTEMS	HA	433 8	680 9	920 5	871 1	683.8	510 3	285.5	4,386	12 3	5,336 2	8,375 0	11,321 8	10,714 7	8,411 2	6,276 9	3,512 1	53,947 8
3. BUILDINGS																		
PUMP OPERATORS HOUSE	NO	3.3	5.4	7.6	7	5 7	4 7	2 4	36	44	144 6	236 4	332 6	307 9	249 3	207 9	105 4	1,584 0
TEMPORARY STORES	NO	0 3	0 5	0 6	0.6	0 5	0.3	0 3	3	250	83 1	119 4	147 7	144.5	113 4	78.4	63 5	750 0
ELEC POWER CONNECT	NO	3.3	5 4	7 6	7	5 7	4.7	2 4	36	13	42 7	69.8	98 3	91 0	73 7	61 4	31 1	468 0
Sub-Total BUILDINGS											270 5	425 6	578 5	543 4	436 4	347 7	200 0	2,802 0
4 TEMPORARY ROADS	NO	3.3	5 4	7 6	7	5 7	4 7	2 4	36	203	667 2	1,090 5	1,534.3	1,420 4	1,150 3	959 1	486 1	7,308 0
5. ADMINIS AND ENGINEERING SUPERV. /a		-	-	-	-	-	-	-	-		319 3	469 0	659.4	710.8	619 2	490 8	389.0	3,657 5
Sub-Total CONSTRUCTION WORKS											8,000 6	12,568.9	17,075.7	16,212.0	12,834.6	9,726 6	5,509.8	81,928 1
Total INVESTMENT COSTS											9,250.5	14,510 7	19,710 9	18,703.4	14,786 7	11,195 4	6,334.5	94,492 1
Total											9,250 5	14,510.7	19,710 9	18,703 4	14,786 7	11,195 4	6,334 5	94,492 1

/a ADMINISTRATION AND ENGINEERING SUPERVISION IS 12.5% OF CONSTRUCTION WORKS

November 27, 1989 17:04

INDIA
PUNJAB IRRIGATION AND DRAINAGE PROJECT
KANDI CANAL
Detailed Cost Table
(RS. '000)

	Unit	Quantity 90/91	91/92	92/93	93/94	94/95	95/96	96/97	Total	Unit Cost	Base Costs 90/91	91/92	92/93	93/94	94/95	95/96	96/97	Total
I. INVESTMENT COSTS																		
A. PRELIMINARY		-	-	-	-	-	-	-	-		409.2	613.0	526.5	170.5	20.7	23.0	3.2	1,766.2
B. LAND		-	-	-	-	-	-	-	-		1,899.3	2,814.0	3,476.5	3,069.0	1,522.4	145.9	138.9	13,066.1
C. CIVIL WORKS																		
1. MC ENG. WORK AND LINING		-	-	-	-	-	-	-	-		3,598.8	5,092.9	6,006.6	5,750.9	4,762.8	3,090.1	1,227.8	29,529.9
2. DIST. ENG. WORKS AND LINING		-	-	-	-	-	-	-	-		5,136.5	7,628.8	9,642.7	9,283.3	7,609.7	5,565.7	3,298.8	48,165.4
3. CROSS DRAINAGE		-	-	-	-	-	-	-	-		13,952.3	22,313.2	31,666.1	30,837.2	24,819.5	19,075.8	10,650.5	153,314.8
4. REGULATORS		-	-	-	-	-	-	-	-		487.1	602.3	744.0	1,016.3	973.0	476.5	167.6	4,476.9
5. ESCAPES		-	-	-	-	-	-	-	-		22.2	242.3	658.0	359.4	42.3	118.0	100.9	1,543.1
6. BRIDGES		-	-	-	-	-	-	-	-		31.0	267.4	1,010.5	1,056.9	744.7	658.3	198.0	3,966.8
7. CHAK OUTLETS		-	-	-	-	-	-	-	-		88.7	121.1	130.8	121.9	108.2	79.9	44.8	695.4
8. WATER COURSES		-	-	-	-	-	-	-	-		7,180.8	10,955.3	14,543.2	14,059.5	11,482.8	8,706.0	5,113.0	72,040.6
9. DRAINAGE PROTECTION		-	-	-	-	-	-	-	-		1,279.0	2,108.2	2,101.4	777.1	98.9	104.8	14.3	6,483.8
10. MISCELLANEOUS		-	-	-	-	-	-	-	-		1,385.2	2,162.6	2,908.2	3,030.9	2,654.0	1,948.7	1,115.6	15,205.2
11. MAINTENANCE		-	-	-	-	-	-	-	-		248.9	419.8	613.8	654.5	602.5	497.9	306.0	3,343.4
Sub-Total CIVIL WORKS											33,420.6	51,914.0	70,025.3	66,947.9	53,898.4	40,321.7	22,237.3	338,765.3
D. OTHER CIVIL WORKS																		
1. TOOLS AND PLANTS		-	-	-	-	-	-	-	-		478.6	684.8	839.2	873.2	540.6	100.9	145.4	3,662.5
2. BUILDINGS		-	-	-	-	-	-	-	-		280.8	758.8	1,151.5	519.4	96.3	70.8	9.3	2,886.8
3. ROADS		-	-	-	-	-	-	-	-		728.7	1,444.1	2,449.2	2,331.9	2,036.0	2,108.0	1,349.3	12,447.2
4. PLANTATION		-	-	-	-	-	-	-	-		6.0	104.7	150.8	722.2	1,019.4	615.4	580.2	3,198.7
5. ESTABLISHMENT		-	-	-	-	-	-	-	-		4,277.2	6,757.5	9,210.8	8,659.7	6,815.0	5,186.9	2,794.0	43,701.1
Sub-Total OTHER CIVIL WORKS											5,771.3	9,749.9	13,801.4	13,106.3	10,507.2	8,082.0	4,878.2	65,896.3
Total INVESTMENT COSTS											41,500.4	65,090.8	87,829.8	83,293.8	65,948.8	48,572.7	27,257	419,493.9
Total											41,500.4	65,090.8	87,829.8	83,293.8	65,948.8	48,572.7	27,257.6	419,493.9

November 27, 1989 17:04

INDIA
PUNJAB IRRIGATION AND DRAINAGE PROJECT
KANDI LOW DAMS
Detailed Cost Table
(RS '000)

	Unit	Quantity 90/91	91/92	92/93	93/94	94/95	95/96	96/97	Total	Unit Cost	Base Costs 90/91	91/92	92/93	93/94	94/95	95/96	96/97	Total	Parameters Phy Cont Rate	For Exch	Gross Tax Rate	Summary Account
I. INVESTMENT COSTS																						
A. LAND		-	-	-	-	-		-	-		3,936 6	7,677 7	9,253 6	6,153 4	1,699.8	239 1	39 9	29,000 0	0 05	0	0 02	LA
B. CONSTRUCTION WORKS																						
DAMSAL DAM		-	-	-	-	-		-	-		4,831 5	7,579 5	10,248 4	9,698 6	7,611 8	5,676 8	3,166 4	48,813 0	0 07	0 05	0 02	CONX
PERCH DAM			-	-		-	-	-	-		876 2	1,374 7	1,858 7	1 759 0	1,380 5	1,029 5	574 3	8,852 8	0 07	0 05	0 02	CONX
CHOHAL DAM		-	-	-	-	-	-	-	-		2,876 8	4,513 1	6,102 3	5,774 9	4,532 4	3,380 2	1,885 4	29,065 1	0 08	0 05	0 02	CONX
SALERAN DAM		-		-	-	-			-		1,730 5	2,714 8	3,670 7	3,473 8	2,726.4	2,033 4	1,134 1	17,483 6	0 08	0 05	0 02	CONX
THANA DAM		-	-	-	-	-	-		-		0 9	0 9	0 9	0 9	0 9	0 9	0 9	6 0	0 08	0 05	0 02	CONX
RAM TATWALI DAM		-	-	-	-	-	-		-		0 9	0 9	0 9	0 9	0 9	0 9	0 9	6 0	0 06	0 05	0 02	CONX
MIRZAPUR DAM			-	-	-	-		-	-		2,622 5	4,114.1	5,562 7	5,264 3	4,131 6	3,081 3	1,718 7	26,495 1	0 08	0 05	0 02	CONX
MALOT DAM			-	-	-	-	-		-		0 9	0 9	0 9	0 9	0 9	0 9	0 9	6 0	0 07	0 05	0 02	CONX
LALWAN DAM			-	-	-	-	-	-	-		4,447 6	6,977 1	9,433 9	8,927 8	7,006 9	5,225 7	2,915 0	44,934 0	0 08	0 05	0 02	CONX
SISWAN DAM					-			-			3,351 2	5,258 4	7,109 8	6,728 5	5,280 7	3,937 8	2,196 7	33,863 0	0 07	0 05	0 02	CONX
SOONK DAM					-	-	-	-			0 9	0 9	0 9	0 9	0 9	0 9	0 9	6 0	0 07	0 05	0 02	CONX
HARIPUR DAM		-		-	-		-	-			2,473 6	3,881 2	5,247 2	4,965 8	3,897 7	2,906 5	1,620 9	24,993 0	0 07	0 05	0 02	CONX
ARNIALA DAM		-	-	-	-	-		-	-		1,365 9	2,142.8	2,897 3	2,741 9	2,152 0	1,604.9	895 2	13,800 0	0 07	0 05	0 02	CONX
Sub-Total CONSTRUCTION WORKS											24,579 3	38,559 1	52,134 3	49,337 9	38,723 3	28,879 6	16,110 0	248,323 6				
C FEASIBILITY STUDIES	LS	-	-	-	-	-	-	-	-		-	-	-	-	-	-	-	-	0 05	0 05	0 02	PREL
Total INVESTMENT COSTS											28,515 9	46,236 8	61,387 9	55,491 3	40,423 1	29,118 7	16,149 9	277,323 6				
Total											28,515 9	46,236 8	61,387 9	55,491 3	40,423 1	29,118 7	16,149 9	277,323 6				

November 27, 1989 17 04

Annex 13
Table 13

INDIA
PUNJAB IRRIGATION AND DRAINAGE PROJECT
TUBEWELLS
Detailed Cost Table
(RS '000)

	Unit	Quantity 90/91	91/92	92/93	93/94	94/95	95/96	96/97	Total	Unit Cost	Base Costs 90/91	91/92	92/93	93/94	94/95	95/96	96/97	Total
1. INVESTMENT COSTS																		
A. PRELIMINARY																		
WELLS	NOS	42 8	43	42 1	45 4	35 2	12 9	8 5	230	4	171 3	172 2	168 3	181 7	141 0	51 7	33 8	920 0
Sub-Total PRELIMINARY											171 3	172 2	168 3	181 7	141 0	51 7	33 8	920 0
B. CONSTRUCTION WORKS																		
1 WORKS	NOS	33 8	40 2	41 4	41 7	36 8	23 1	13 1	230	341	11,521 8	13,703 2	14,119 4	14,209 7	12,542 2	7,880 4	4,453 3	78,430 0
2 PUMP HOUSE	NOS	20 2	36	40	37 6	40	36	20 2	230	17 6	355 8	633 5	703 5	662 4	703 5	633 5	355 8	4,048 0
3 ELEV TANKS/PIPE DISTRIB SYS	NOS	20 2	36	40	37 6	40	36	20 2	230	236 4	4,779 0	8,509 0	9,449 1	8,897 7	9,449 1	8,509 0	4,779 0	54,372 0
4 PUMP UNITS COMPLETE	NOS	20 2	36	40	37 6	40	36	20 2	230	69 3	1,401 0	2,494 4	2,770 0	2,608 3	2,770 0	2,494 4	1,401 0	15,939 0
5 INSTALLATION	NOS	20 2	36	40	37 6	40	36	20 2	230	2	40 4	72 0	79 9	75 3	79 9	72 0	40 4	460 0
6 TRANSMISSION AND TRANSFORMATION	NOS	20 2	36	40	37 6	40	26	20 2	230	98 5	1,991 3	3,545 4	3,937 1	3,707 4	3,937 1	3,545 4	1,991 3	22,655 0
7 ADMINISTRATION AND ENGINEERING SUPERVISION /a	NOS	-	-	-	-	-			-		2,089 8	2,932 2	3,340 4	3,267 7	3,246 6	3,052 4	2,431 3	20,360 4
8 BUILDINGS	LS	-	-		-	-					20 1	2 8	1 4	0 5	0 2	0 0	0 0	25 0
Sub-Total CONSTRUCTION WORKS											22,199 2	31,892 6	34,400 8	33,429 1	32,728 6	26,187 2	15,452 0	196,289 4
C VEHICLES																		
HEAVY DUTY TRUCK	NOS	3 2	0 4	0 2	0 1	0	0	0	4	300	966 0	133 7	66 2	24 5	7 4	1 8	0 3	1,200 0
Sub-Total VEHICLES											966 0	133.7	66 2	24 5	7 4	1 8	0 3	1,200 0
D MACHINERY AND EQUIPMENT																		
PERCUSSION RIG	NOS	3 2	0.4	0 2	0 1	0	0	0	4	4,000	12,879 3	1,783 2	882 5	327 2	99 1	24 5	4 1	16,000 0
COMPRESSOR	NOS	1 6	0 2	0 1	0	0	0	0	2	550	885 5	122 6	60 7	22 5	6 8	1 7	0 3	1,100 0
MISCELLANEOUS OFFICE AND FIELD EQUIPMENT	LS	-	-	-		-	-	-	-		17 0	18 1	11 3	7 6	8 9	8 5	8 6	80 0
Sub-Total MACHINERY AND EQUIPMENT											13,781 8	1,924 0	954 5	357 3	114 8	34 7	13 0	17,180 0
Total INVESTMENT COSTS											37,118 2	34,122 4	35,589 8	33,992 6	32,991 8	26,275 5	15,499 1	215,589 4
Total											37,118 2	34,122 4	35,589 8	33,992 6	32,991 8	26,275 5	15,499 1	215,589 4

/a ADMINISTRATION AND ENGINEERING SUPERVISION IS 12 5% OF CIVIL WORKS

November 27, 1989 17 04

Annex 13
Table 14

INDIA
PUNJAB IRRIGATION AND DRAINAGE PROJECT
Table 15 TRAINING
Detailed Cost Table
(RS '000)

	Quantity									Base Costs							
	Unit	90/91	91/92	92/93	93/94	94/95	95/96	96/97	Total	Unit Cost	90/91	91/92	92/93	93/94	94/95	95/96	96/97	Total
I INVESTMENT COSTS																		
A. BUILDINGS																		
IRRIGATION ADMINISTRATION BUILDING											3,959 2	6,211 1	8,398 0	7,947 5	6,237 5	4,651 9	2,594 8	40,000 0
TRAINING INSTITUTE											1,600 5	2,351 4	2,594 8	2,229 7	1,030 2	[illegible] 7	27 6	10,000 0
RESIDENTIAL HOUSING											687 8	781 2	224 9	76 3	23 1	[illegible]	1 0	1,800 0
HOSTEL ACCOMMODATION											865 4	983 1	283 0	96 0	29 1	7 2	1 2	2,265 0
Sub Total BUILDINGS											7,112 9	10,326 8	11,500 7	10,349 5	7,319 9	4,830 6	2,624 5	54,065 0
B. TRAINING ABROAD											334 8	334 0	337 5	325 6	359 3	285 1	23 8	2,000 0
C. FURNITURE AND EQUIPMENT											76 4	86 8	25.0	8 5	2 6	0 6	0 1	200 0
D STAFF AND OTHER RECURRENT COSTS											734 9	733 2	740 7	714 7	788 6	625 7	52 2	4,390 0
Total INVESTMENT COSTS											8,259 0	11,480 8	12,603 9	11,398 3	8,470 3	5,742 0	2,700 7	60,655 0
Total											8,259 0	11,480 8	12,603 9	11,398 3	8,470 3	5,742 0	2,700 7	60,655 0

November 27, 1989 17 04

INDIA
PUNJAB IRRIGATION AND DRAINAGE PROJECT
STUDIES/PILOT/ DEMONSTRATIONS/MONITORING/APPLIED COMPUTER TECHNOLOGY
Detailed Cost Table
(RS '000)

	Unit	Quantity 90/91	91/92	92/93	93/94	94/95	95/96	96/97	Total	Unit Cost	Base Costs 90/91	91/92	92/93	93/94	94/95	95/96	96/97	Total
I. INVESTMENT COSTS																		
A. CONTINUING STUDIES FROM PUNJAB IRRIGATION I																		
CONJUNCTIVE USE OF SALINE WATER		-	-	-	-	-	-	-	-		85.7	85 7	85 8	85.4	86.5	84 2	74.7	588.0
SKIMMING FRESH GROUNDWATER		-	-	-	-	-	-	-	-		410.2	666 1	851 2	807 2	684 3	560 1	387 8	4,367 0
GROUNDWATER QUALITY DISTRIBUTION		-	-	-	-	-	-	-	-		583.9	931.7	1,259 7	1,192.1	935.6	697.8	389.2	6,000 0
DRIP IRRIGATION		-	-	-	-	-	-	-	-		123.5	195 4	254.7	239 1	204.2	148 4	30.6	1,196 0
IRRIGATION OPERATIONAL STUDIES		-	-	-	-	-	-	-	-		50.2	69 7	99 3	93.3	69.6	55 4	34 5	472 0
Sub-Total CONTINUING STUDIES FROM PUNJAB IRRIGATION I											1,263.5	1,948 6	2,550 7	2,417 2	1,980 2	1,545 9	916 8	12,623 0
B. NEW RESEARCH AND MONITORING STUDIES																		
1 IMPROVED OPERATIONAL EFFICIENCY OF BBMB							-				4,185 2	4,175.2	4,218.2	4,069 9	4,490 8	3,563.3	297 4	25,000 0
2. ARTIFICIAL GROUNDWATER RECHARGE STUDY																		
PATIALA KI RAO		-	-	-	-	-	-	-	-		148.5	232 9	314.9	298.0	232.9	174 4	97.3	1,500.0
JAYANTI DEVI KI RAO		-	-	-	-	-	-	-	-		99 0	155 3	210.0	198 7	155 9	116 3	64 9	1,000 0
Sub-Total ARTIFICIAL GROUNDWATER RECHARGE STUDY											247.4	388.2	524.9	496 7	389.8	290 7	162 2	2,500.0
3. HYDRO GEOLOGICAL STUDY OF EXISTING WATERLOGGED DEPRESSIONS		-	-	-	-	-	-	-	-		334.8	334 0	337 5	325 6	359 3	285 1	23 8	2,000 0
4. MODERNIZATION OF WATER RESOURCES LABORATORY		-	-	-	-	-	-	-	-		395.9	621.3	839.0	797.5	615.6	433.2	222.5	3,925 0
5. AUGMENTATION OF CLIMATALOGICAL NETWORK		-	-	-	-	-	-	-	-		39.8	74 9	149 0	130.6	38 3	5 5	0.9	439 0
6. STATE GROUNDWATER MONITORING NETWORK		-	-	-	-	-	-	-	-		1,171.8	1,169 1	1,181 1	1,139 6	1,257 4	997 7	83.3	7,000 0
7. MONITORING OF SEEPAGE LOSSES FROM CANALS AND WATERCOURSES		-	-	-	-	-	-	-	-		167.4	167.0	168.7	162.8	179.6	142.5	11.9	1,000.0
Sub-Total NEW RESEARCH AND MONITORING STUDIES											6,542.4	6,929.7	7,418.4	7,122 7	7,330.9	5,718.1	801.9	41,864.0
C. APPLIED COMPUTER TECHNOLOGY																		
1. HRDWARE																		
PCS AND ACCESSORIES	LS	-	-	-	-	-	-	-	-		485.2	729 8	986.8	933.8	732.9	546 6	304.9	4,700.0
Sub-Total HRDWARE											485.2	729.8	986.8	933 8	732 9	546.6	304.9	4,700.0
2. SOFTWARE																		
SOFTWARE LOCAL	LS	-	-	-	-	-	-	-			198.0	310.6	419.9	397.4	311 9	232.6	129.7	2,000 0
SOFTWARE FOREIGN	LS	-	-	-	-	-	-	-	-		79.2	124.2	168.0	159.0	124.8	93.0	51.9	800.0
Sub-Total SOFTWARE											277.1	434.8	587 9	556.3	436.6	325.6	181.6	2,800.0
Sub-Total APPLIED COMPUTER TECHNOLOGY											742.3	1,164.6	1,574.6	1,490.2	1,169 5	872.2	486.5	7,500 0
D. TECHNICAL ASSISTANCE AND TRAINING																		
CONSULTANCY SERVICES	LS	-		-	-		-	-	-		198.0	310.4	420.3	396.0	315.7	225.0	74.7	1,940.0
LOCAL TRAINING	LS		-			-	-	-	-		49.5	77 6	105.0	99.3	78.0	58.1	32 4	500.0
Sub-Total TECHNICAL ASSISTANCE AND TRAINING											247 5	388 1	525 3	495 3	393 6	283.1	107 1	2,440 0
Total INVESTMENT COSTS											8,795.8	10,430 9	12,069 0	11,525 4	10,874 3	8,419 3	2,312.3	64,427.0
Total											8,795.8	10,430 9	12,069 0	11,525 4	10,874.3	8,419 3	2,312.3	64,427 0

November 27, 1989 17 04

Annex 13
Table 16

EQUIPMENT, VEHICLES AND GOODS PROCUREMENT

Description	SYSTEM MODERNIZATION Quant	Unit	Rate US$	Total Cost US$ 000	KANDI AREA DEVELOPMENT Quant	Unit	Rate US$	Total Cost US$	DRAINAGE Quant	Unit	Rate US$	Total Cost US$ 000	INSTITUT. DEVELOPMENT Quant	Unit	Rate US$	TOTAL Quant	Unit	Rate US$	Total Cost US$ 000	ICB US$ 000	LCB
CONSTRUCTION EQUIPMENT																					
Drainage Trencher									1	#	600,000	600				1	#	600,000	600	600	
Concrete Mixers	29	#	1,300	38					2	#	1,300	3				31	#	1,300	40		40
Portable Pumps	29	#	1,000	29					57	#	1,000	57				86	#	1,000	86		86
Sheeps Foot Roller	24	#	1,500	36												24	#	1,500	36		36
Air compressors	5	#	20,000	100	2	#	20,000	40								7	#	20,000	140		140
Vibrators	13	#	900	12												13	#	900	12		12
Pneumatic tools	10	#	1,300	13												10	#	1,300	13		13
Plate Compactors	10	#	3,000	30												10	#	3,000	30		30
Welding Sets	3	#	8,000	24												3	#	8,000	24		24
Backhoes/dragline 1.25 m3									3	#	236,000	708				3	#	236,000	708	708	
Drilling Rigs, Percussion					4	#	250,000	1,000								4	#	250,000	1,000	1,000	
Workshop misc	1	ls	10,000	10	1	ls	10,000	10								2	ls	10,000	20		20
Dragline 0.75 m3									5	#	150,000	750				5	#	150,000	750	750	
Generators, 1500 W									4	#	1,200	5				6	#	1,200	7		7
																			3,466		
INSTALLED EQUIPMENT																					
Deep well casings and screens					230	#	6,530	1,502								230	#	6,530	1,502	1,502	
Deep well pumpsets/motors/switchgear					230	#	5,300	1,219								230	#	5,300	1,219	1,219	
Automatic gate/lev	83	#	1,600	133												83	#	1,600	133		133
Drainage pumps for pilot subsurface									32	#	2,000	64				32	#	2,000	64		64
Discharge meters for wells									25	#	1,700	43				25	#	1,700	43		43
Vertical Turbine pumps									4	#	3,600	14				6	#	3,600	22		22
																			1,480		
COMMUNICATIONS EQUIPMENT																					
VHF communication	1	ls		5,300												1	ls	5,300,000	5,300	5,300	
PLANNING EQUIPMENT																					
Computers and software													1		430,000	430	1	ls	430,000	430		430
Misc Survey/field/drafting					1	ls	12,000	12	1	ls	180,000	180				2	ls				0
VEHICLES																					
Cars	4	#	10,000	40					1	#	10,000	10				5	#	10,000	50		50
Jeeps	15	#	9,000	135					20	#	9,000	180				35	#	9,000	315		315
Trucks	12	#	20,000	240	4	#	20,000	80								16	#	20,000	320		320
Tractors (wheeled)	12	#	8,000	96												12	#	8,000	96		96
																			781		
GOODS																					
PVC Drainage pipe perforated									1	ls	2,000,000	2,000				1	ls	2,000,000	2,000	2,000	
PVC Delivery pipe, light gauge					1	ls	2,800,000	2,800								1	ls	2,800,000	2,800	2,800	

Annex 13
Table 17

INDIA

PUNJAB IRRIGATION AND DRAINAGE PROJECT

Estimated Schedule of Disbursements

Bank/IDA fiscal year and Semester	Disbursements Bi-Annual	Cumulative	%
	-----(US$ M)-----		
1990			
Second	12	12	7
1991			
First	3	15	9
Second	4	19	12
1992			
First	8	27	16
Second	10	37	22
1993			
First	10	47	28
Second	11	58	35
1994			
First	12	70	42
Second	13	83	50
1995			
First	11	94	57
Second	12	106	64
1996			
First	11	117	71
Second	12	129	78
1997			
First	16	145	88
Second	15	160	97
1998			
First	3	163	99
Second	2	165	100

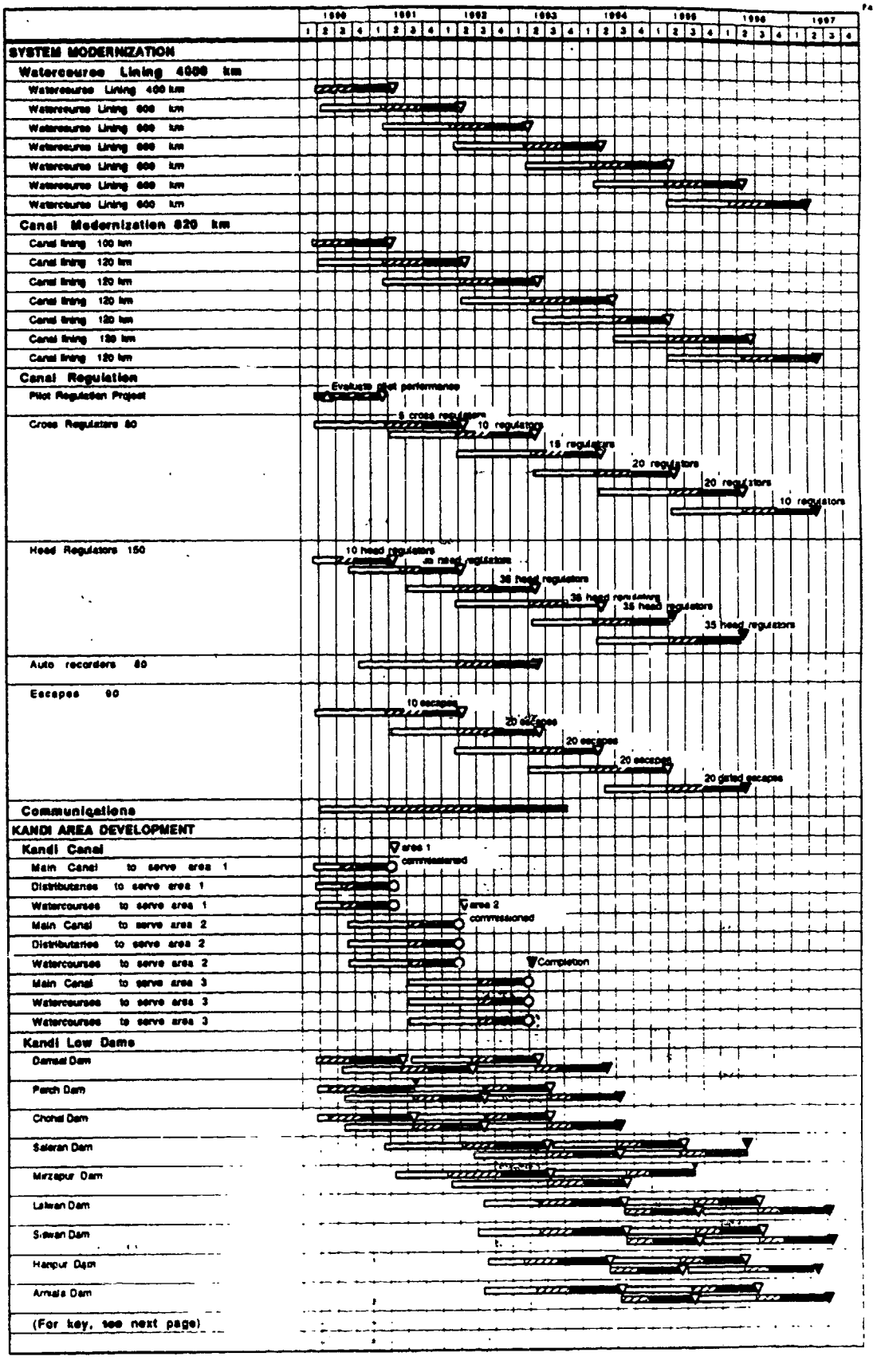
1990
1991
1992
1993
1994
1995
1996
1997
SYSTEM MODERNIZATION
Watercourse Lining 4000 km
Watercourse Lining 400 km
Watercourse Lining 600 km
Watercourse Lining 600 km
Watercourse Lining 600 km
Watercourse Lining 600 km
Watercourse Lining 600 km
Watercourse Lining 600 km
Canal Modernization 820 km
Canal lining 100 km
Canal lining 120 km
Canal lining 120 km
Canal lining 120 km
Canal lining 120 km
Canal lining 120 km
Canal lining 120 km
Canal Regulation
Pilot Regulation Project
Evaluate pilot performance
Cross Regulators 80
5 cross regulators
10 regulators
15 regulators
20 regulators
20 regulators
10 regulators
Head Regulators 150
10 head regulators
35 head regulators
35 head regulators
35 head regulators
35 head regulators
35 head regulators
Auto recorders 80
Escapes 90
10 escapes
20 escapes
20 escapes
20 escapes
20 gated escapes
Communications
KANDI AREA DEVELOPMENT
Kandi Canal
area 1 commissioned
Main Canal to serve area 1
Distributaries to serve area 1
Watercourses to serve area 1
area 2 commissioned
Main Canal to serve area 2
Distributaries to serve area 2
Watercourses to serve area 2
Completion
Main Canal to serve area 3
Watercourses to serve area 3
Watercourses to serve area 3
Kandi Low Dams
Damsal Dam
Perch Dam
Chohal Dam
Saleran Dam
Mirzapur Dam
Lalwan Dam
Siswan Dam
Hanpur Dam
Amala Dam
(For key, see next page)

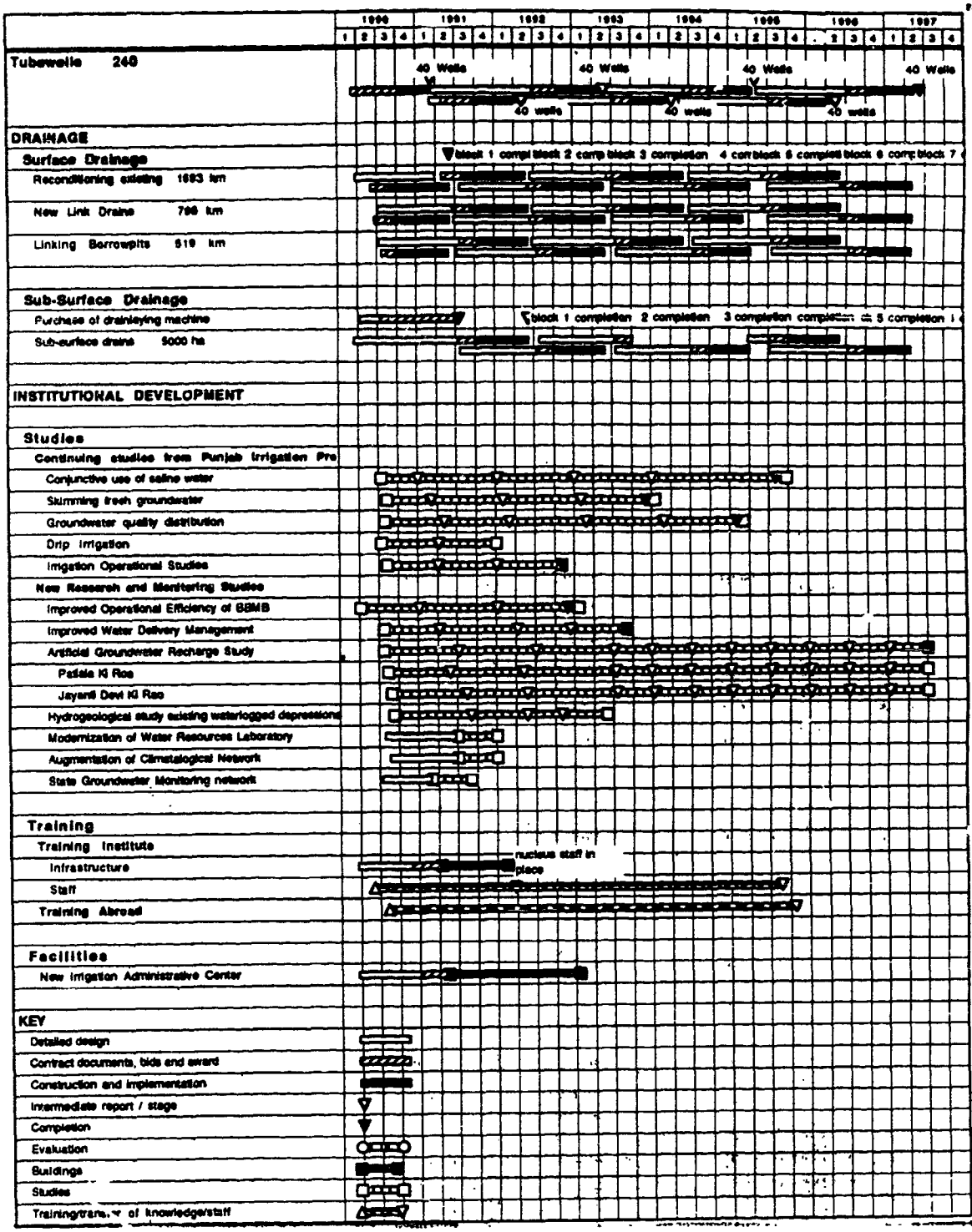
1990
1991
1992
1993
1994
1995
1996
1997
Tubewells 240
40 Wells
40 wells
DRAINAGE
Surface Drainage
Reconditioning existing 1693 km
New Link Drains 798 km
Linking Borrowpits 519 km
block 1 compl block 2 comp block 3 completion 4 com block 6 complete block 6 comp block 7
Sub-Surface Drainage
Purchase of drainaying machine
Sub-surface drains 5000 ha
block 1 completion 2 completion 3 completion completion 5 completion
INSTITUTIONAL DEVELOPMENT
Studies
Continuing studies from Punjab Irrigation Pro
Conjunctive use of saline water
Skimming fresh groundwater
Groundwater quality distribution
Drip irrigation
Irrigation Operational Studies
New Research and Monitoring Studies
Improved Operational Efficiency of BBMB
Improved Water Delivery Management
Artificial Groundwater Recharge Study
Patiala Ki Rao
Jayanti Devi Ki Rao
Hydrogeological study existing waterlogged depressions
Modernization of Water Resources Laboratory
Augmentation of Climatological Network
State Groundwater Monitoring network
Training
Training Institute
Infrastructure
nucleus staff in place
Staff
Training Abroad
Facilities
New Irrigation Administrative Center
KEY
Detailed design
Contract documents, bids and award
Construction and implementation
Intermediate report / stage
Completion
Evaluation
Buildings
Studies
Training/transfer of knowledge/staff

INDIA

PUNJAB IRRIGATION AND DRAINAGE PROJECT

Economic Analysis

1. The irrigation system in Punjab is complex and highly developed. Farms receive water from rainfall, canals, and from groundwater, the last of these being the product of infiltration from rainfall, canal seepage, and through the irrigated fields.

2. The water resource is almost fully exploited, and continued irrigation development depends upon:

a) reduction in losses to unproductive evapotranspiration;

b) reduction in losses to saline aquifers which cannot be recovered for re-use by pumping;

c) improved operation of the system to maximise the value of available supplies;

d) protection of the existing land resources against damage due to temporary flooding and long-term waterlogging; and

e) development of remaining surface and groundwater reserves.

3. Project investments would contribute to each of these objectives. Lining of watercourses would reduce unproductive evapotranspiration and local waterlogging in areas where the groundwater is reusable. In areas where the groundwater is saline, lining of watercourses and canals would prevent the unrecoverable loss of seepage water, and slow the development of waterlogging. Investments in improved communications and improved canal regulation structures would allow more efficient system operation, reducing losses and increasing the productivity of existing resources and facilities. The surface drainage investments would reduce damage to standing crops due to flooding, while the subsurface pilot program would reclaim some abandoned land, and protect large areas of land in NW India from waterlogging. Developments in the Kandi area would exploit groundwater resources in that area, and develop surface irrigation using supplies allocated in the State's overall water allocation plan. Construction of independent small storage schemes would have irrigation benefits as well as major flood protection benefits for the areas downstream. Additional non-agricultural benefits would be derived through the exploitation of power generation sites during the course of canal modernization works.

4. The nature of the State's irrigation system is such that irrigation water can be allocated selectively among existing irrigated commands, and/or to new areas. Decisions reflect government policies as well as physical feasibility. The policy of GOP has been to allocate water equitably among all potential users. This provides limited supplies, which due to good management are also very reliable. Farmers have thus been encouraged to maximise the

return to water—the scarce resource—rather than land, which would have happened if more water had been allocated to a few favored farmers, while others received no irrigation.

5. This policy has been successful: Punjabi yields are amongst the highest in India, as are farm incomes in irrigated areas. Farmers have been encouraged to supplement scarce canal supplies through private investments in groundwater development. While improvements in farm productivity may be possible through fine-tuning allocations among commands, the transparent fairness of the existing system contributes greatly to the farmers willingness to accept their allocations and hence to the stability of the entire water management system. Thus the fundamental policy decisions on which water allocation are based have been accepted in analyzing the project investments, and possibilities of substantial reallocations among commands have not been considered. Under the project, however, studies will be initiated to assess the potential for rescheduling of rotations during the course of the irrigation season to exploit local variations in the pattern of demand and hence the marginal productivity of water.

6. In all cases, the quantification of benefits is based on current performance in irrigated areas of the state. The prices used in the economic analysis (Appendix 1) are based on projected international prices for all traded inputs and outputs, adjusted for transport, processing and quality differentials. Investment costs have been adjusted uniformly by a standard conversion factor of 0.8. A recent Bank report[1] provides detailed analytical background for defining international prices for the most important crops (wheat, rice, cotton) which together account for more than 80% of the value of production. For the analysis of lining, which effectively results in an increased water supply and/or savings in power required to pump groundwater, economic evaluation is based on the value of water, which has been derived from an analysis of the value of production in the plains areas (Appendix 2), which includes the cost of pumping based on recent assessments of the marginal value of power.

7. Watercourse Lining Measured results comparing lined watercourses with unlined watercourses indicate water savings of 20%. Of the water "lost", about one third is consumed in non-beneficial evapotranspiration (weed growth on canal banks, wetting/drying of the canal banks, surface evaporation from local waterlogging), while the remaining two thirds reaches the water `. Where the groundwater is sweet, this seepage can be recovered through pumping. Where the groundwater is saline, recovery is physically possible, but the water may not be fit for reuse. The economic impact of watercourse lining therefore falls between two extremes—where recoverable seepage losses are fresh, the benefit of lining is limited to reduced pumping costs, plus "saving" that proportion of the loss which goes to non-beneficial evapotranspiration. Where the groundwater is strongly saline, none of the seepage is recoverable and the impact of lining is to substantially increase (by some 20%) the water available to the plant.

---

[1] India: Effective Incentives in Agriculture: Cotton, Groundnuts, Wheat and Rice, Resident Mission in India, April 1989

8. Punjab's surface irrigation supply is the equivalent of 500mm per annum over the total command, which is equivalent to 5,000m^3/ha. The net economic value of production per hectare in the plains areas is Rs 10,450/yr (Table 1). Without irrigation, most of the plains areas would support only erratic kharif cropping (the land was essentially barren prior to the introduction of irrigation), which would at most amount to 10% of irrigated production values. Thus a first approximation of the value of irrigation water is Rs 1.8/m^3 [1].

9. However, about half the cropping in Punjab is supported by tubewells (which are in fact recycling infiltration from irrigation and rainfall) but are adding substantially to the water available at the field. It is estimated on the basis of irrigation statistics that the water supply from wells is equal in volume to the water supplied directly from surface irrigation. Thus the total supply is 10,000m^3/ha, indicating a value of water of Rs 0.9/m^3. The cost of pumping the water from wells, based on an economic cost of power of Rs 1.5/kwh, is Rs 0.24/m^3, including depreciation of equipment. The total cost of pumping (5,000m^3/ha*Rs 0.24/m^3 = Rs 1200) must be deducted from the value of production per hectare. Thus the value of incremental surface supplies is estimated as: (average net economic value of production per hectare - cost of groundwater pumping) / (total supply), or 10,400*90%-1200/10,000 = Rs 0.8/m^3.

10. The analysis indicates economic rates of return ranging from 20% in fresh groundwater areas to 42% in saline areas, confirming GOP's policy of giving priority to lining in saline groundwater areas.

11. These figures exclude additional productive benefits due to elimination of crop damage from local waterlogging, increased equity of distribution, and higher field irrigation efficiencies in tail-end areas. As indicated in Annex 2, the majority (about two thirds) of watercourse lining, in accordance with GOP's priorities, would be in areas of saline groundwater or sandy areas where losses are particularly severe.

12. Canal Lining. All canal lining would be in saline groundwater areas (Annex 3), and losses would generally not be recoverable for productive irrigation, ultimately requiring further investments to offset the drainage hazard. Immediate productive benefit would be derived from seepage savings. Based on experience under the previous project, losses would be reduced from 2.4-3 m^3/s/m^2/Mm^2 to 0.2-0.5 m^3/s/m^2/Mm^2 of lining (Annex 2, para 21). Based on 280 days per year of operations, this provides minimum annual water savings per square meter of lining of 45 m^3, compared to a current cost of lining of Rs 120/m^2. Based on the value of water analysis described above, the cost of canal lining in the selected areas of saline groundwater and high water table where lining is to be implemented would be have an ERR of 33%.

Development in the Kandi Zone

13. Public tubewell development in the Kandi area would be provide limited irrigation to relatively large numbers of farmers, leading to relatively low rates of return. Cropping patterns assumed for the analysis are conservative: it is likely that high value fruits and vegetables will quickly become

---

[1] (Rs 10,400/ha - 10%) divided by 5,000m^3/ha

significant. The cost of power has been assumed at Rs 1.5/kwh (consistent with the analysis above of watercourse lining). Agricultural benefits have been assumed to reach full development over a period of five years, at which time productivity would be about 80% of that achieved in the plains. Agricultural conditions are less well suited to basic field crops in the Kandi area, although these are likely to predominate in the early years of development. In later years, the prospects for developing horticultural crops are excellent, which significantly increase the economic value of agricultural production. Based on these projections, the economic rate of return to tubewell development is 15%, including the full cost of electrification.

14. Development of Low Dams Direct benefits from the construction of these dams would result from irrigation. Substantial indirect benefits result from the control of annual floods in the areas onto which the hill torrents currently flow. Last year's floods (the worst on record) caused enormous damage to crops and infrastructure was enormous, except in those areas below existing low dams in the Kandi area.

15. Agricultural projections indicate that the economic value of production per hectare would increase from Rs 2,450 to Rs 8,200 (Table 1) due to project investments. The typical cost per hectare of these schemes is Rs 43,000, and implementation takes 3-4 years. Based on experience with existing projects, where full realization of benefits has taken 4-5 years, the ERR of low dam projects is 12% based on incremental agricultural production, and 15% if estimated savings in flood damage are included. As in the case of the tubewell development, there is excellent scope in the longer term for developing high value horticultural crops (which is already beginning in some of the well established commands). Thus while the initial returns to these investments are acceptable, but relatively unattractive in relation to other project components, the longer term prospects for soundly based economic development in this most backward area of the state are good.

16. The Kandi Canal Productivity in the command of the Kandi Canal would be similar to the areas to be developed under tubewells. However, the economic return to the canal (including sunk costs for partially completed components) is considerably higher, at 20%, due to the impact of pumping costs on the tubewell investments.

17. Drainage The ERR for the drainage investments has not been computed. Surface drainage works are essentially small incremental investments to a very substantial existing system, and as such would have unrealistically high returns. The subsurface works, based on pilot experiments, are expected to be attractive investments, but the longer term studies included under the project, together with the evaluation of the options for ultimate disposal of the saline effluent, will determine the economic viability of the program.

18. Summary of Project Impact The project will result in incremental irrigated area in the plains of some 75,000 ha, plus a further 10,000 ha under public tubewells, 7,000 ha under low dams, and 20,000 ha under the first phase of the Kandi Canal. These investments will generate the following benefits:

	Area (000 ha)	Econ Val Rs M	Cotton -----	Rice (000 Ton)	Wheat ----	Man Days 000/mo
Present						
Plains						
Low Dams	7	21			4	29
Tubewells	10	25			7	46
K Canal	20	25			7	46
Full Development						
Plains	75	788	5	133	210	735
Low Dams	7	58		3	12	84
Tubewells	10	82			24	134
K Canal	20	164			48	268
Increment						
Plains		788	5	133	210	735
Low Dams		37		3	8	55
Tubewells		57			17	88
K Canal		139			41	222
	Total	**1,021**	**5**	**136**	**276**	**1,100**

Table 1

Summary Agricultural Data
per Hectare

	Present			Future		
	Cropping (%)	Yield T/ha	Net Economic Value Rs	Cropping (%)	Yield T/ha	Net Economic Value Rs
Low Dams						
Maize	20	1.2	193	50	2.5	1,191
Sesamum	10	0.5	352			
Groundnut	5	0.6	19	10	1.5	415
Arhar	5	0.5	40			
Fodder	10	15.0	177	10	30.0	417
Wheat	40	1.5	1,696	60	3.0	4,494
Gram	15	0.6	59			
Mustard	10	0.6	234	20	1.0	821
Paddy				10	3.5	803
Mung				10	0.8	179
Value of Production per ha			2,771			8,319
Wells, Kandi Canal						
Rape Seed	5	0.5	90	10	1.0	403
Maize	45	1.0	309	60	2.5	1,371
Sesamum	5	0.4	133			
Arhar	8	0.5	71			
Fodder	8	12.0	93	5	22.0	116
Wheat	55	1.2	1,736	80	3.0	5,804
Gram	2	0.8	23			
Groundnut				10	1.5	407
Berseem				5	30.0	121
Value of Production per ha			2,454			8,222
Plains (Present and future same)						
Cotton	10	0.6	1,304			
Paddy	55	4.8	2,148			
Sugarcane	5	55.0	341			
Mung	5	1.0	113			
Guar	10	25.0	466			
Wheat	70	4.0	5,170			
Gram	3	0.6	20			
Barley	3	2.3	108			
Mustard	12	1.0	438			
Berseem	3	30.0	341			
Value of Production per ha			10,449			

Table 2

3ha Farm **FARM BUDGET--Plains**

	Income per ha --Rs--	Crop Area ha	Farm Income --Rs--	Cash Inputs	Hired Labor	**Net Income**	Family Labor (days)
				----------Rs/ha-------			
Cotton	4289	1.7	7148	1717	855	**4440**	26
Paddy	5920	0.3	1973	660	231	**1035**	12
Sugarcane	15000	0.3	4000	854	784	**2362**	28
Mung	4349	0.2	725	77	130	**499**	4
Guar	6250	0.5	3125	314	311	**2462**	7
Wheat	6850	1.3	9132	2199	1030	**5790**	17
Gram	1952	0.5	976	474	290	**181**	8
Barley	3880	0.3	1293	314	192	**759**	3
Rape/Mustar	7030	0.3	2343	211	152	**1963**	7
Berseem	7500	0.3	2500	236	118	**2120**	9
	Totals	**5.8**	**33213**	**7056**	**4094**	**21610**	**120**

Table 3

2ha Farm **FARM BUDGET--Kandi Canal and Wells (pre development)**

	Income per ha --Rs--	Crop Area ha	Farm Income --Rs--	Cash Inputs	Hired Labor	**Net Income**	Family Labor (days)
				----------Rs/ha-------			
Rape Seed	3515	0.1	352	24	2	**326**	4
Maize	2593	0.9	2334	321	144	**1869**	40
Sesamum	4450	0.1	445	16	12	**417**	3
Arhar	3043	0.2	487	80	36	**371**	7
Fodder	3000	0.2	480	67	43	**370**	4
Wheat	2348	1.1	2583	412	94	**2077**	41
Gram	3009	0.0	120	22	1	**97**	1
	Totals	**2.6**	**6801**	**942**	**331**	**5528**	**100**

Table 4

2ha Farm **FARM BUDGET--Kandi Canal and Wells (full development)**

	Income per ha --Rs--	Crop Area ha	Farm Income --Rs--	Cash Inputs	Hired Labor	Net Income	Family Labor (days)
				----------Rs/ha-------			
Rape Seed	7030	0.2	1406	107	61	**1239**	9
Maize	6333	1.2	7599	1089	1173	**5337**	66
Fodder	5500	0.1	550	65	75	**410**	3
Wheat	5871	1.6	9394	2639	2079	**4676**	82
Groundnut	9525	0.2	1905	405	87	**1413**	16
Berseem	7500	0.1	750	73	90	**586**	14
	Totals	**3.4**	**21604**	**4377**	**3565**	**13662**	**190**

Table 5

2ha Farm **FARM BUDGET--Low Dams (pre development)**

	Income per ha --Rs--	Crop Area ha	Farm Income --Rs--	Cash Inputs	Hired Labor	Net Income	Family Labor (days)
				----------Rs/ha-------			
Maize	3052	0.4	1221	194		**1026**	20
Sesamum	5540	0.2	1108	32		**1076**	7
Groundnut	3810	0.1	381	165		**216**	7
Arhar	3091	0.1	309	62		**247**	5
Fodder	3750	0.2	750	84		**666**	7
Wheat	2936	0.8	2348	300		**2048**	32
Gram	2270	0.3	681	188		**493**	11
	Totals	**2.3**	**7642**	**1073**		**6569**	**97**

Table 6

2ha Farm **FARM BUDGET--Low Dams (full development)**

	Income per ha --Rs--	Crop Area ha	Farm Income --Rs--	Cash Inputs	Hired Labor	Net Income	Family Labor (days)
				----------Rs/ha-------			
Maize	6333	1.0	6333	757	455	**5120**	75
Groundnut	9525	0.2	1905	381	11	**1513**	20
Fodder	7500	0.2	1500	118	91	**1292**	8
Wheat	5871	1.2	7045	1679	495	**4871**	103
Mustard	7030	0.4	2812	173	32	**2606**	21
Paddy	5905	0.2	1181	241		**940**	13
Mung	4349	0.2	870	85	66	**719**	10
	Totals	**3.4**	**21645**	**3433**	**1151**	**17061**	**249**

Agricultural Prices for Economic Analysis

1. Prices used in the economic analysis for agricultural production and inputs are based, as far as possible, on projected world commodity prices for the year 2000, converted to 1990 dollars. The analysis is based (for the major crops) on a recent paper produced by the Bank's New Delhi Office (para 6, above), but using the latest bank projections for future prices. Together, rice, wheat and cotton account for about 90% of the value of production in Punjab. Prices for other crops are based on market prices, adjusted by the Standard Conversion Factor (SCF) of 0.8.

Cotton

2. Since 1980, Indian cotton exports have averaged 100,000 tons per year. However, the vast majority of production (95%) is consumed domestically, though indirect export of cotton as cloth and as garments is significant.

3. The international value of Indian cotton depends on variety. The cotton produced in Punjab, which is short and medium staple, is among the lower qualities, though yields in Punjab are high by Indian standards. However, demand for these qualities has generally grown faster than supply over recent years, and for these varieties, India is effectively an importer.

4. The projected price of cotton lint (year 2000 price, in 1990 dollars) is US$1,658/ton. After adjusting for processing and transportation costs (evaluated using the SCF), and adding the value of cottonseed, this is equivalent to Rs 9,800/ton of seed cotton.

Wheat

5. India's average production of wheat since 1980 is about 43.0 million tons per year mainly for domestic consumption. Its average exports since 1980 (including wheat products) was about 124,000 tons, about 0.3% of average production. During this period, domestic stocks were also accumulated, although these were largely utilized during the drought of 1988. Thus India has, during the 1980's, been essentially self-sufficient in wheat, and it is a matter of judgement as to whether wheat should be treated as an import or an export in deriving the appropriate price. On balance, the rapid growth of irrigation facilities and spread of HYVs (on which self-sufficiency is based) looks unlikely to continue at current rates, and wheat would appear more likely to be an import. Indeed, continued pursuit of more profitable crops in the Punjab itself could be a major cause of imports, since the state contributes 60% of surplus production at present.

6. Based on projected world prices, and after adjustment for international transport costs, and deduction of internal transport (Punjab itself is a surplus state), the estimated value of wheat is estimated to be Rs3411/ton.

Rice

7. During the 80s, India's annual rice production averaged about 57 million tons, primarily for the domestic market. Imports and exports of rice during the 80s were negligible. During the 80s, domestic price for rice was consistently below comparable world price adjusted for trade and transport margins.

8. Based on project world prices and after adjustment for international transport cost and deduction of internal transport cost (Punjab is a surplus state), the estimated value of wheat is assumed to be Rs. 2986/ton.

9. The prices of other crops (which comprise a small proportion of total production in value terms) are based on current market prices adjusted by the SCF. All prices are summarized below.

	Crops-Rs/T		Byprod-Rs/T		Seeds-Rs/kg	
	Fin	Econ	Fin	Econ	Fin	Econ
BARLEY	1600	1280	100	80	3.5	2.8
COTTON	8178	9800	100	80	7.3	5.8
FODDER (BERSEEM)	250	200			4.0	3.2
FODDER (GUAR)	250	200			4.0	3.2
GRAM	3724	2979	60	48	12.4	9.9
GROUNDNUT	6250	5000	100	80	11.0	8.8
MAIZE	2293	1834	150	120	6.6	5.3
MUNG	5336	4269	100	80	12.9	10.3
PADDY	1657	2986	30	24	4.2	3.4
PULSES(ARHAR)	5845	4676	60	48	12.0	9.6
RAPESEED/MUSTARD	7000	5600	30	24	14.6	11.7
SESAMUM	11000	8800	50	40	8.0	6.4
SUGAR CANE	300	240	100	80	0.3	0.2
WHEAT	1657	3411	300	240	4.0	3.2

				Labor-Rs/day			Draft-Rs/day	
N	4700	4700						
P	8300	8300	min	18	14	min	10	8
K	1700	1700	max	30	24	max	30	24

INDIA

PUNJAB IRRIGATION AND DRAINAGE PROJECT

Organization of Irrigation Wing, IPD

1. Successful development and exploitation of irrigation resources is the result of several distinct phases:

a) Investigations and data collection
(collection of basic information on hydrology, soils, topography, water table depth and quality, monitoring and evaluation of system performance)

b) Planning
(overall resource assessment, analysis of alternative development options, integration of potential projects into coordinated development plan)

c) Design
(preparation and costing of facilities designs at reconnaissance, feasibility and detailed design stages, analysis of alternatives, specification of standards)

d) Construction
(planning and managing physical project implementation, primary quality control)

e) Operation and Maintenance
(operation of facilities in accordance with state rules and procedures to provide agreed service to farmers, maintenance of facilities so as to ensure continued system performance)

f) Regulatory
(monitoring and enforcement of state/national rules in relation to water quality, dam safety, inspection of works in progress and investigation of reports of deviations from rules)

2. These six stages cannot be precisely demarcated, and there will often be a degree of overlap and accommodation to meet particular circumstances. Furthermore, even a straightforward project may involve several "cycles" of investigation, planning, and design before a final project definition emerges for implementation.

3. Organizationally, the inputs required at each stage can be provided in one of two ways: either the Irrigation Department is organized geographically, with regional offices staffed to provide necessary specialist advice, or the Department is organized functionally, with specialist Directorates or sub-departments working only in one phase of irrigation development.

4. While water and land resources were relatively plentiful, straightforward engineering works were adequate to produce acceptable benefits. Rapid project development was the appropriate strategy and the regional organizational structure was adequate to meet this objective. Today, particularly in a state such as Punjab, with only limited remaining resources, options are more limited. Deriving maximum benefit from all possible sources as efficiently as possible is now the priority, and this requires specialization and coordination.

5. To achieve this end, a functionally based organization has several advantages. First, it encourages professional irrigation engineers to develop areas of expertise, for example in planning, or design, or hydrology. This is increasingly necessary as technology grows ever more complex, and demanding. By creating functional groups, each engineer is exposed to colleagues working in the same field, encouraging exchanges of ideas and experience, and allowing opportunities to arrange efficient training programs. Regional organization, on the other hand, will often result either in a single officer trying to resolve all emerging problems in a particular field, with only limited scope to share his experiences and problems, or to a succession of "part-time specialists" each of whom has neither the opportunity nor the motivation to acquire specialist skills.

6. Second, a functionally based organization promotes the rapid diffusion of innovation. If one office is responsible for all designs, then a new, more economical lining procedure or culvert design will immediately have its impact in all new construction drawings.

7. Thirdly, while engineers will normally wish to develop their skills during their careers in several types of assignment, functional departments offer the prospect of advancement in a specialist area for those who so choose, rather than the need to keep moving to ensure career development. Furthermore, the impact of personnel changes—and the dependence on individual officers—is minimized, because the general continuity of the department will ensure that lessons and experiences are not lost when one individual moves on.

8. In the planning area, functional specialization offers obvious benefits to ensuring that investment programs are well coordinated. The primary task of an Irrigation (or Water Resources) Planning Department are assessment of the overall water balance of the state, reflecting current and future needs for agriculture, industrial, and domestic users. Within this framework, investment proposals are evaluated in relation to alternative means of achieving specific objectives (for example, irrigation through wells, or irrigation through surface supplies) and the impact of one investment on other users (for example the impact of lining on groundwater and drainage requirements).

Present Situation

9. The present set up in Punjab is a mixture of the two approaches described above. Data Collection and Investigations seem to be done in part by the project and construction circles, and in part by specialists — for example, the Water Resources Directorate, and the Planning and Design Studies Directorate for the Kandi Area.

10. In the area of Planning, while there is a designated project coordination officer, under the MD, PSTW, and the CE Lining also is described as CE Planning, there is no central group or department where the investment options are assessed in their entirety, nor where the State's overall surface and groundwater resource position is analyzed from the irrigation, municipal, industrial and power perspectives. While the project coordination activity (consisting basically of monitoring implementation performance of project components, and assembling and processing reports and documentation required by the Bank) has worked effectively in the previous project, and in the formulation of the present project, the objective to date has been narrowly focussed on the reporting requirements of the Bank rather than the planning needs of the state.

11. GOP intends to establish a Central Design Office where all specialists in this area would be based. For a state which already has such a unified irrigation system, this will be very beneficial. Limited design facilities will still be required at the construction circle level, for minor on-site modifications to CDO drawings, and design of simple standard structures, but all substantive design work would be centralized.

12. As regards construction, separate Chief Engineers are in place for canal lining, Kandi Canal, tubewells, watercourse lining, low dams, and drainage. For each of these officers, the primary task is management of resources for construction, and hence the primary interest is securing an adequate share of available resources (manpower, funds, cement, steel, etc).

13. In O&M, the highly integrated irrigation system in the State, and the clear and uniform rules and procedures, have already resulted in a functionally specialized department under the Chief Engineer Canals.

14. Regulatory functions are not clearly defined, although the generally good quality of construction and well organized system operation indicate that enforcement of standards is generally satisfactory

Proposals for Reorganization of the Irrigation Wing

15. Institutional changes are complex and should be approached with care. Many factors beyond basic technical considerations have shaped the current structure of the Irrigation Department, and these must be considered before reforms are considered. Furthermore, the pace of change must be such as to allow continued functioning of the Department and adjustment of staff to new responsibilities. The three priority areas where scope for change is apparent are described below.

16. First, GOP is already proposing to establish a functionally organized Design section, under a Chief Engineer. The basis for this organization would be an existing group of specialists, formed to produce the designs for the Sutlej-Yamuna Link canal which are now virtually complete.

17. Secondly, as regards Planning, there is a clear need to bring together the various resource analysis activities, and create a review function for investment proposals. There is no reason to inhibit good ideas from developing in the field, but it is necessary to ensure that a central review

ensures feasibility and consistency of proposals. The State's water resources are close to full development, and all potential future sources (canal seepage savings, diversion from surplus to deficit areas, groundwater development) and uses (human, animal, and industrial demands) must be accounted for in planning the future development of the sector. This change required the establishment of a Chief Engineer (Water Resource Planning), plus the regrouping of existing units. This action was taken in September, 1989.

18. With this framework in place, subsidiary questions related to the organization of construction could also be addressed. For example, construction is currently organized by sub-project (Kandi Canal, Kandi Low Dams, etc). At a certain level, such division of responsibility is appropriate, but it may be more efficient at the Chief Engineer (Construction) level to have a primarily geographical allocation of responsibility, so the construction of various related facilities (canals, tubewells, drains) is efficiently coordinated.

INDIA

PUNJAB IRRIGATION AND DRAINAGE PROJECT

Documents Available in the Project File

1.	Punjab Irrigation Project Phase II Identification Report (Volumes 1-IV)	October, 1987
2.	Punjab Irrigation Project Phase II Identification Report (Amended)	June,1989
3.	Action Plan for Improvement of Bhakra Beas Systems Operation	January, 1988
4.	Punjab Public Works Department Specifications	1963
5.	Punjab State Tubewell Corporation Design Manual	June, 1980
6.	Study of Flood Flows on the Ghaggar River Central Water Commission	January, 1989
7.	Draft Terms of Reference for Dam Safety Review Panels	-
8.	The Rising Water Table and Development of Water Logging in Northwestern India	July, 1985
9.	Proposed Syllabus for Punjab Irrigation Management Institute	June, 1989

MAP SECTION

INDIA

PUNJAB IRRIGATION AND DRAINAGE PROJECT

BHAKRA-BEAS-RAVI COMPLEX

CATCHMENT, COMMAND AREAS, AND DELIVERY CANALS

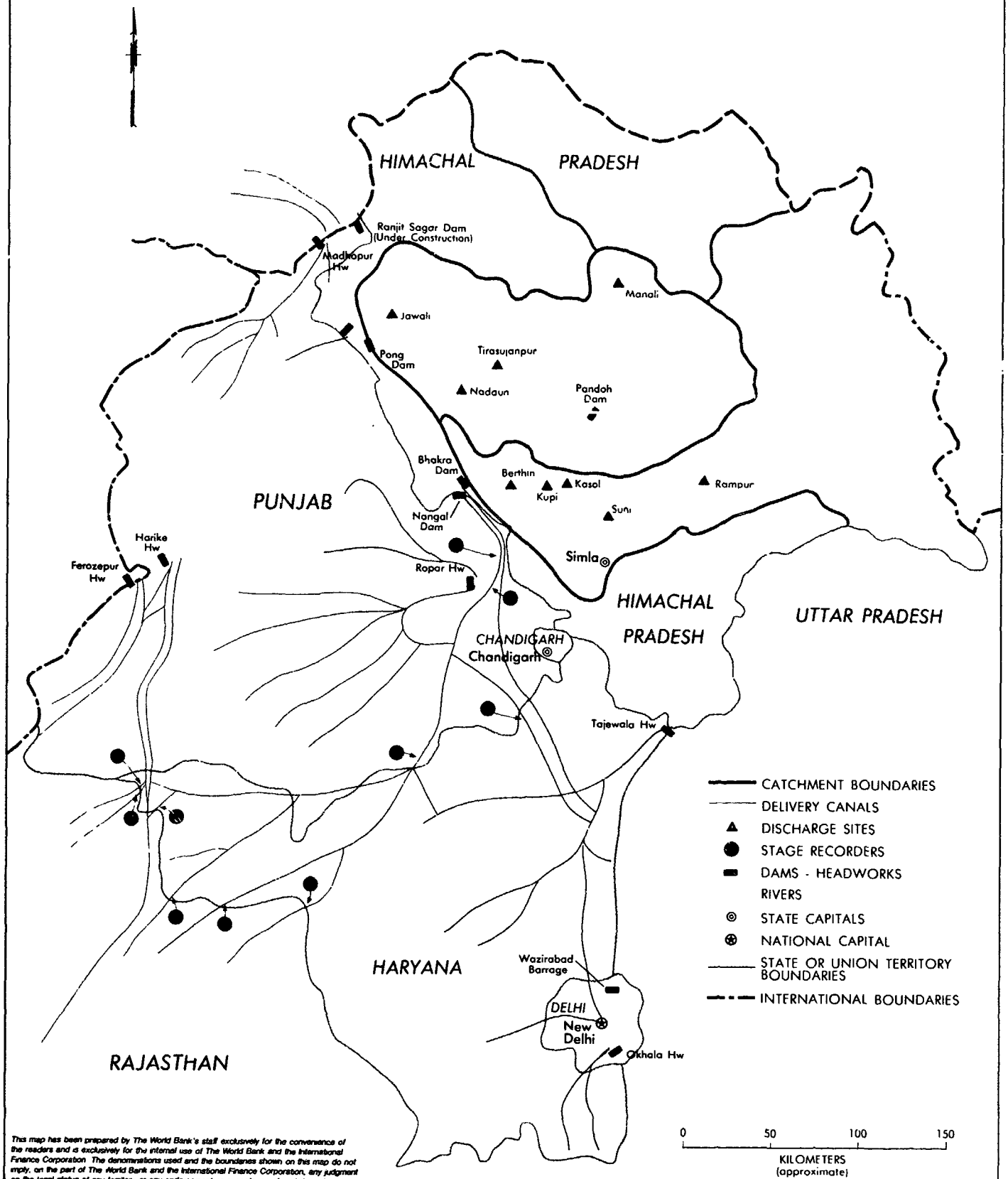

This map has been prepared by The World Bank's staff exclusively for the convenience of the readers and is exclusively for the internal use of The World Bank and the International Finance Corporation. The denominations used and the boundaries shown on this map do not imply, on the part of The World Bank and the International Finance Corporation, any judgment on the legal status of any territory or any endorsement or acceptance of such boundaries.

SEPT. 1989

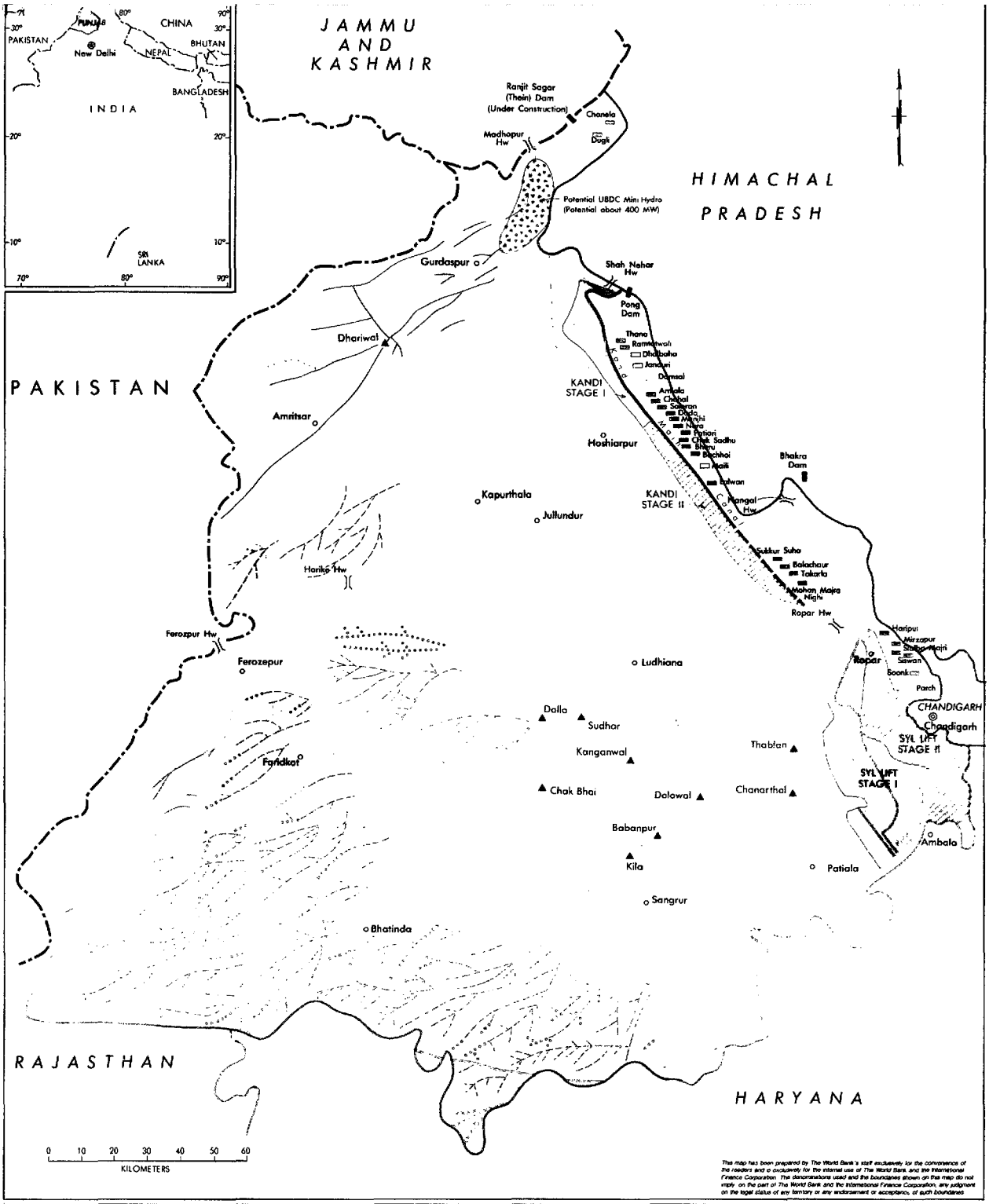

This map has been prepared by The World Bank's staff exclusively for the convenience of the readers and is exclusively for the internal use of The World Bank and the International Finance Corporation. The denominations used and the boundaries shown on this map do not imply, on the part of The World Bank and the International Finance Corporation, any judgment on the legal status of any territory or any endorsement or acceptance, of such boundaries.

INDIA

PUNJAB IRRIGATION AND DRAINAGE PROJECT

MODERNIZATION OF CANAL SYSTEM AND WATERCOURSES
KANDI CANAL, SYL LIFT, AND MICRO-HYDRO PROJECTS

- KANDI MAIN CANAL, PHASE I
- KANDI MAIN CANAL, PHASE II
- EXISTING MAIN AND BRANCH CANALS
- EXISTING DISTRIBUTARY CANALS

LINING COMPONENT:

- CANALS AND WATERCOURSES ALREADY LINED
- CANALS AND WATERCOURSES PARTIALLY LINED, TO BE COMPLETED UNDER PROJECT
- CANALS LINED, BUT WATERCOURSES TO BE LINED UNDER THE PROJECT
- CANALS PROPOSED TO BE LINED BUT WATERCOURSES YET TO BE LINED UNDER THE PROJECT

- PROPOSED MICRO-HYDRO SITES
- PROPOSED MINI-HYDRO SITES
- PROPOSED PUBLIC TUBEWELL AREAS
- PROPOSED KANDI CANAL AND SYL LIFT COMMAND AREAS:
  - STAGE I - PROJECT
  - STAGE II - PLANNED
- DAM SITES
- HEADWORKS

KANDI LOW DAMS:

- COMPLETED
- UNDER CONSTRUCTION
- UNDER PROPOSAL

- WATERLOGGED AREAS
- SALINE AREAS
- RIVERS
- NATIONAL CAPITAL
- STATE CAPITAL
- TOWNS AND VILLAGES
- STATE OR UNION TERRITORY BOUNDARIES
- INTERNATIONAL BOUNDARIES

SEPTEMBER 1

IBRD 21801

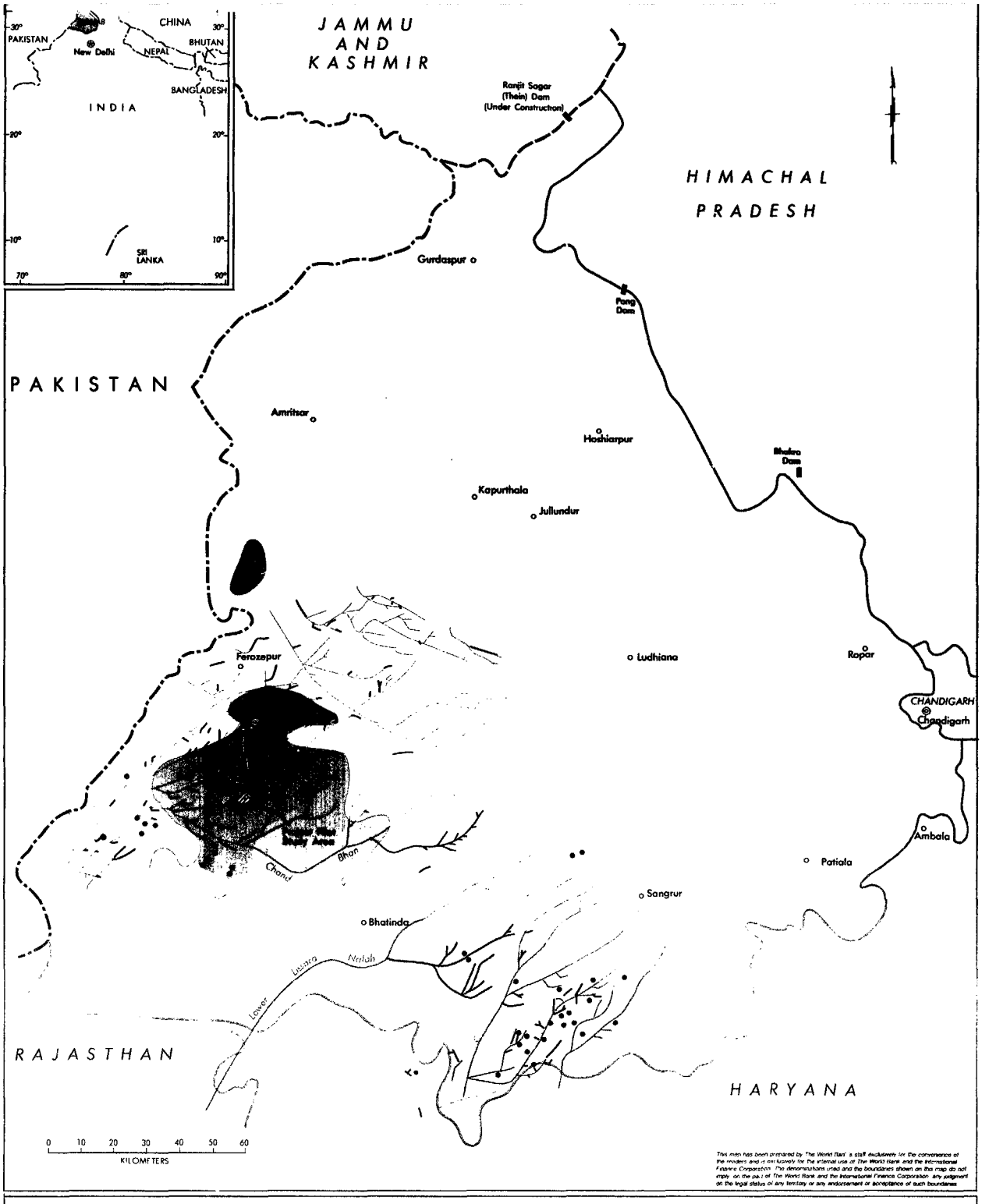

INDIA

PUNJAB IRRIGATION AND DRAINAGE PROJECT

DRAINAGE - SURFACE AND SUBSURFACE

- PROJECT PILOT STUDY AREA
- PROPOSED SUBSURFACE DRAINAGE SYSTEMS/FISHPONDS

SURFACE DRAINS:

- PROPOSED, NEW OR IMPROVED
- EXISTING
- DAMS
- WATERLOGGED AREAS
- SALINE AREAS
- RIVERS
- TOWNS AND VILLAGES
- STATE CAPITAL
- NATIONAL CAPITAL
- STATE OR UNION TERRITORY BOUNDARIES
- INTERNATIONAL BOUNDARIES

Note: Canals, roads, railroads, and local boundaries omitted.

SEPTEMBER 198

D 21802