Report No. 10213-BR

Brazil
Reforming the Telecommunications Sector: Policy Issues and Options for the 1990s

December 21, 1992

LA1 Department
Infrastructure Operations Division
Latin America and the Caribbean Region

FOR OFFICIAL USE ONLY

Document of the World Bank

BRAZIL

REFORMING THE TELECOMMUNICATIONS SECTOR: POLICY ISSUES AND OPTIONS FOR THE 1990s

This report is based on information collected during operational missions in 1990 and 1991. The report was written by Ioannis Kessides with contributions from Mary Sheehan, Robert Bruce (consultant), Charles Jackson (consultant), Nicholas Miller (consultant), and Roger Noll (consultant). Salahuddin Ahmad provided research assistance and Irene Lewin secretarial assistance. The authors wish to thank the Minister and the officials of the Ministry of Communications and TELEBRAS for their help and cooperation.

BRAZIL

REFORMING THE TELECOMMUNICATIONS SECTOR: POLICY ISSUES AND OPTIONS FOR THE 1990s

Table of Contents

APPENDIX A

APPENDIX B

APPENDIX C

EXECUTIVE SUMMARY

1. **Overview of Sectoral Performance.** The Brazilian telecommunications industry is at a critical stage of its development. As recently as ten years ago, the sector was seen as rapidly developing, highly efficient, and offering increasingly modern and reliable infrastructure and services. The formation of TELEBRAS in 1972 represented an appropriate reorganization of a previously fragmented industry handicapped by structural inefficiencies. During most of the period immediately following its reorganization the new system achieved impressive growth rates, making Brazil's by far the largest telephone system among the developing countries and the tenth largest in the world.

2. Today, the sector is confronted with grave and potentially debilitating problems. Brazil's density of approximately six lines per 100 inhabitants is well below those observed in other newly industrialized countries-- Uruguay has twelve, Korea twenty-eight, and Taiwan more than thirty. Indeed, Brazil has lower telephone penetration than Colombia, a substantially less modernized economy. Modernization of the domestic economy has naturally led to a dramatic increase in the demand for information services. Yet, expansion in the capacity of the telecommunications system has significantly lagged the growth in demand. As a result, service quality and reliability have deteriorated. The probability of receiving a dial tone has declined from 99 percent in 1984 to 85 percent in 1988, while long-distance call completion rates fell from 55 percent in 1984 to 42 percent in 1988. Call completion rates currently average 50 percent for local calls, compared to 80 percent for well-dimensioned networks. There is a substantial excess demand for basic access to the network as evidenced by the high premiums observed in the active secondary market for telephone lines. In addition, customers have to wait as long as two years after depositing a substantial installation fee to be connected to the network.

3. The reasons for the deterioration in performance are to be found in the range of public policies towards the sector. While in many countries technology-driven deregulation was rapidly becoming a firmly established national policy, in Brazil, the industry has been pervasively regulated. The Government has sought to use public sector entities as instruments of stabilization policy through price controls and investment targets. In the telecommunications industry, price controls were imposed in disregard of the performance implications of the pricing rules involved, subjecting the operating entities to considerable financial distress and substantially impairing their ability to provide continued service. Government induced constraints on investment (reflecting efforts to limit the public sector debt) frustrated long-term financial planning, which is critical to the development of this capital intensive sector. At the same time, the government has, until recently, pursued an autarkic policy that succeeded not only in imposing high network costs upon its national telecommunications entities, but quite likely in diminishing the incentives and ability of the domestic firms to flexibly respond to changing conditions in the world market by specializing in areas of actual or emerging comparative advantage.

4. Brazil's unreliable and largely inadequate telecommunications infrastructure has constrained domestic growth, impaired international competitiveness, and discouraged foreign investment. The government has recognized the heavy opportunity costs of the uneconomic misallocation of telecommunications resources and of failing to respond to the novel and rapidly

changing demands on the sector. In the last several months, important steps toward sectoral reform have been undertaken (see para. 17). However, this report argues that the critical importance of the telecommunications infrastructure and the magnitude of the sectoral performance problem demand additional fundamental changes in the existing policy framework--for example, the separation of telecommunications operational activities from Government oversight or regulatory activities represents a much needed policy reform that is likely to have a significant impact on conduct and performance.

5. **Industry Background.** The key institutional feature of the Brazilian telecommunications sector, as in most other countries, has been an ubiquitous network operated by a protected state monopolist. The primary operating entity is Telecomunicacoes Brasileiras S.A. (TELEBRAS), a national holding company under the supervision of the Secretariat of Communications in the Infrastructure Ministry. TELEBRAS maintains majority share ownership of all regional telephone companies (one in each state and the Federal District) that are responsible for local and intrastate service, and of Empresa Brasileira de Telecomunicacoes S.A. (EMBRATEL), the sole long-distance carrier.

6. The Brazilian government has vigorously promoted the development of a privately-owned domestic telecommunications equipment manufacturing capacity. TELEBRAS buys its equipment (including digital switches, transmission media, and terminals) from favored national suppliers. Domestic private enterprises also play an important and exclusive role as contractors of projects in the sector.

7. **Rationale for Public Intervention.** The publicly articulated rationales for the extensive regulatory intervention in the telecommunications industry generally focus on two seemingly compelling market failures: natural monopoly and the "network externality". Indeed, telecommunications is a prime example of an industry with extensive economies of scale where government intervention through regulation and ownership was promoted to redress perceived behavioral and structural market failures and to secure the benefits of size without suffering the disadvantages of monopolistic pricing.

8. Until the late 1960s, few questioned the proposition that the telephone industry exhibits natural monopoly characteristics that strongly militate for public intervention. Natural monopoly characteristics of telecommunications service can be attributed to three general sources: economies of scale and scope in the physical provision of basic services; economies of scale in network planning and management; and advantages in raising capital. However, the rapid technological change of the last two decades has generated new and potent forces within the industry that drastically reduced natural monopoly in the provision of long-distance service. As a result, the deregulation of interexchange markets is increasingly seen as a desirable social objective. New technologies (e.g., cable based telephone access, cellular radio, and direct microwave links to local or long-distance switching nodes) are also gradually reducing the advantages of single-supplier local exchange markets and are, therefore, continuously eliminating the natural monopoly/market failure justification for local exchange regulation.

9. Another argument in favor of the deregulation of telecommunications services is that recent technological and economic developments have greatly increased the cost of the distortions in economic incentives that arise in a regulated environment. Such costs encompass price distortions associated with the regulatory process, reduced incentives to innovate and lower costs,

distortions in investment decisions, costs of policing the boundaries between regulated and unregulated markets, and the considerable resources that firms are frequently observed to expend as intervenors in the regulatory process.

10. Notwithstanding the above, local exchange telecommunications retains many of the characteristics of natural monopoly even when full account is taken of new technologies. Thus, there is need for continued regulatory oversight. In addition, it is important to recognize that even in those segments of the industry that are naturally competitive, the transition towards more competitive market structures is likely to be a gradual one. It might, therefore, be appropriate for Government to retain residual authority to intervene in severe cases of restrictive business practices and consequent market failure (e.g., regulatory intervention might be needed to facilitate competitive entry). It may also be desirable for Government to intervene on distributional grounds (e.g., to ensure, typically through subsidies and universal service ruling principles, that rural areas or specific socioeconomic groups obtain services).

Key Sectoral Issues

11. The historical evidence on regulatory performance in Brazil, like in many other countries, reveals a disappointing record of dealing with market failures in the telecommunications industry. Most of the performance problems in the sector seem to have their origin in excessive government interference and pervasive regulatory control--the sector's current regime of competition and regulation, as well as its structure of governance.

12. **Pricing policy.** The single most important cause for the secular deterioration in the performance of the sector is the failure of past governments to prescribe adequate rate increases during the inflationary spiral of the last decade. As of October 1990, basic telecommunications tariffs (monthly access charge, local pulse, public token, and long-distance), in real terms, were between 17 and 37 of their levels in January 1978. These estimates were not properly adjusted to take into account gains due to technical change, which have been important in this industry. However, even when such an adjustment is made, real tariffs still remain at less than one-quarter of their level in 1978, indicating a dramatic erosion. The consequent inadequacy of telecommunications revenue has severely undermined the ability of the operating entities to invest in needed new facilities or to modernize existing installations.

13. In addition to having caused a substantial reduction in the inflation-adjusted average price of service, regulatory controls have created significant distortions within the tariff structure itself. Indeed, the Brazilian tariff structure seems to be at a significant variance with the pricing policies adopted by other advanced nations. The present pricing policies maintain an inefficient and inequitable regime in which certain groups of consumers are being subsidized in ways unrelated to rational social goals. The imposition of extremely high installation charges as a device for rationing demand for lines has not been effective since demand for basic access to the network is highly inelastic. Despite the high installation fee (approximately $1,500 for residential and $2,500 for business customers), there is still considerable excess demand as evidenced by the active secondary market for telephone lines. The existence of excess demand at such high installation prices is not counterintuitive given the country's low telephone penetration; as the secondary market prices indicate, the primary deterrent to business demand

appears not to be the price, but the wait for service. For the existing subscribers, on the other hand, ordinary telephone services (monthly access charge, local, and domestic long-distance) are substantially underpriced. By contrast, international calls are relatively expensive in Brazil compared to other countries. Low usage charges have undoubtedly accentuated the congestion problem by encouraging overuse of facilities.

14. This pricing policy has effectively decapitalized the system. The quality of service has suffered significantly. Equally detrimental has been the inability of the operating companies to respond effectively to new demands arising from an expanding modernized economy and higher national incomes. More than one million customers are still waiting to be connected to the network, after having deposited for at least two years the substantial installation fee. Furthermore, the prevailing structure of tariffs is inequitable and at significant variance with international practice. In most other countries, only a small portion of non-traffic sensitive investments in local loops are recovered from the initial installation fee, while the greater share is recovered from monthly access (rental) charges. The economic rational for this policy is that, the marginal cost of capital to the telephone company is generally lower than that faced by the individual (especially residential) customer. Given Brazil's incompletely developed capital markets for personal loans, the imposition of extremely high installation fees has clearly served to preclude low income households from obtaining telephone service, even if they could afford the equivalent monthly amortization. Also, since businesses do a disproportionately large amount of international calling, they effectively subsidize residential subscribers whose ordinary telephone services (access and usage) are substantially underpriced. However, businesses that are overcharged for their telephone service generally tend to pass their costs to consumers in the form of higher prices. This means that residential telephone service is being subsidized by a kind of a sales tax. Given the economic characteristics of the existing residential subscribers to the network, it would be difficult to defend such a subsidy on equity grounds.

15. **Government interference.** Governmental restrictions upon the structure and conduct of the industry, especially policy-induced constraints on investment and managerial discretion, have also contributed to the secular deterioration in the performance of the sector. Past governments have limited the ability of the telecommunications entities to reinvest operating surpluses and prohibited their direct access to domestic or international capital markets for financing investment outlays. State interference in investment decisions and the diversion of telecommunications revenue to a general government fund are likely to have caused inefficient allocation of resources and have clearly undermined national network expansion and service quality.

16. **Constraints on sources of equipment.** Telecommunications equipment prices are substantially higher in Brazil as a direct result of protective governmental policies. The exercise of "market reserve" and the excessive controls over imports of technologies and products have adversely affected the costs of the operating entities. This is manifest in the extremely high costs of incremental investment in the Brazilian telephone system. The average investment per line exceeds $4000, and the marginal cost of an access line in major urban areas is approximately $2500. These costs are twice as large as those observed in countries that either contain advanced manufacturing industries or engage in relatively free trade in equipment. In combination with low usage fees, high input prices have caused the Brazilian telecommunications system to lack adequate

internally-generated financial resources to satisfy demand and maintain quality standards.

Policy Reform Options

17. The common experience from other countries reveals quite clearly that significant net benefits may result from liberalization (the reduction of statutory restrictions on competition) and regulatory reform in this sector. It is therefore very encouraging that in the last few months substantive policy reforms have already been announced or are currently being contemplated. These reforms are consistent with the Constitutional requirement that all "public telecommunications services" may be offered only by TELEBRAS subsidiaries on the public switched network, while permitting entry into "limited services" that are offered to a "closed group" with a "common activity and interest". The revision of the informatics law and the concomitant relaxation of implicit or explicit trade restrictions, the new regulation for "limited services" establishing the right of private entities to offer value-added and private network services in parallel with the public switched system, the opening of satellite and cellular telecommunications services to private entry, the provisions for new methods of financing basic network expansion by groups of private parties, and the recently announced plans for tariff rebalancing, represent important steps in the right direction. In addition, the Government anticipates a 1993 revision of the Constitution and its limits on private sector offerings of telecommunications services.

18. These reforms, if properly implemented, could mitigate the existing public monopolies in the establishment of telecommunications networks and the provision of telephone services. However, some of the announced measures impose significant controls on the scope of competition by tightly regulating the licensing and provision of private network hardware and its interconnection with the public switched network; they also rely too heavily on technological distinctions between services which, as the experience of a number of countries during the 1980s indicates, are no longer valid. Indeed, the fact that these measures seem to place too much reliance on licensing restrictions and rules of interconnection (presumably to inhibit bypass and hence to protect the financial integrity of the public network) rather than on pricing rationality, exemplifies the difficulty of revising historic policies toward competition and industry structure without commensurate changes in the arrangements for regulatory oversight.

19. Given the crucial need for new infrastructure investment, it may be worthwhile for the Brazilian authorities to assess whether the protection of existing public services should be the key factor in deciding the terms and conditions of operating private networks. It should be noted that, in other nations, the argument against extensive investment in private networks is that it might strand investment in the public network. The premise is that the public network was constructed to serve all users, so that if a large number leave for private networks, excess capacity will result. This, in turn, forces the choice between higher prices for customers who cannot leave the public network or bankruptcy for the public telephone company. In Brazil, this argument is inapplicable, for the telecommunications industry faces excess demand--not possible excess capacity--for the foreseeable future. Thus, the Brazilian authorities would better serve the public interest by encouraging and

facilitating the development of private networks which enable large users to bypass the local exchange or even in some cases the entire switched network, and not by placing undue reliance on licensing and restrictive terms and conditions for operating very sophisticated hardware.

20. A number of possible reforms are available which do not depend upon the transfer of ownership and therefore would not violate existing constitutional constraints on service. They include:

21. **Rebalancing of the pricing structure.** The highest policy priority is to rebalance the structure of tariffs, in part to reduce usage (and thereby to improve service quality) and in part to generate internal funds for capital investment. Such rebalancing could entail a significant increase in the basic monthly access charge (for both business and residential customers), as well as an increase in the usage fee for peak-period local and long-distance calls. In addition, the option of reducing the extremely high installation fee to customers that are willing to pay a compensating higher monthly rental charge must be considered (although it must be noted that even the current high installation charges are below the average cost of service due to the high equipment costs and perhaps the internal inefficiencies of the operating entities).

22. **Creating an independent regulatory commission.** The Ministry of Infrastructure has to be responsible for the design of a national telecommunications policy. An independent authority could be established to monitor the behavior of the autonomous public enterprises and to control prices, entry and exit, quality of service standards, accounting methods, and financial structure. This authority could be either an independent commission governed by statute and subject to the checks and balances of each of the Executive, Legislative, and Judiciary branches of the Government or, alternatively, a quasi-independent enforcement entity which may part of either the Legislative or Executive branches. Such authority would need to be given a clearly defined jurisdiction in the resolution of disputes and should establish transparent regulatory principles. A strong regulatory agency that is shielded from political pressure and exercises its function in an impartial and expert fashion could be very effective in protecting consumers from monopolistic pricing while at the same time authorizing rates that generate adequate revenue to finance maintenance and investment. The need to strike a delicate balance between broad national objectives (which at times might call for radical shifts in policy) and the maintenance of a stable and predictable industry environment (which is critical for the orderly development of a capital intensive industry) makes it highly desirable that the policy function which is fundamentally political be separated from the regulatory function.

23. **Establishing a more "arm's length" relationship between the government and TELEBRAS.** Establishing a clear mechanism for removing government from the immediate decision-making process in telecommunications is an indispensable precondition for improving the sector's performance. To secure future investment outlays that are sufficient for the integrity of the system and would permit needed network expansion, TELEBRAS must be granted a greater degree of autonomy and commercial orientation. This is the most effective means for ensuring that in the future a reasonable portion of telecommunications revenue is reinvested to maintain or expand service and avoid the *de facto* decapitalization of the system. In addition, the autonomous operating entity must be allowed direct access to domestic and international capital markets. The recent successful

flotation of Eurobonds, despite the country's continuing macroeconomic problems, indicates significant confidence on the sector's growth potential by the international financial community.

24. **Unrestricted resale.** The experience from other countries reveals significant potential for competition and innovation arising from the usage of leased lines. The unrestricted resale of basic transmission capacity for both voice and data services could therefore be assigned a high policy priority and all prohibitions to offer services to third parties should be eliminated. Joint ventures between the main operating entity and private entrants for the construction of switching and transmission capacity should be encouraged. These measures will likely facilitate the construction of badly needed new capacity and permit a more efficient utilization of existing capacity.

Sectoral Vision

25. The State, after a good start through the 1970s, has largely failed in its mission to provide reliable telecommunications services on a national level. Hence, the centrality of the basic public network must be questioned. In addition, technological and economic developments, and inter-country experience, strongly suggest formidable advantages to a major rebalancing of the private-public sectors' roles in this industry.

26. The ongoing technological explosion and the substantial increase in demand within Brazil for better and more varied telecommunications services is generating enormous pressures for radically modifying public policy towards the sector. The traditional state-owned telephone system is increasingly seen as being incapable of responding sufficiently to the informational challenge and the rapidly changing market and technological conditions. Because of their financial, technical, and managerial resources, private sector entities may indeed have a comparative advantage in keeping abreast of this increasingly complex industry. In addition, the experience of the last decade with the Brazilian telecommunications industry demonstrates the extreme difficulty of placing an effective buffer between public enterprises and the central government. Indeed, the long-term solution to the problems of bureaucratic ineffectiveness, political interference, lackluster growth, and poor service delivery may require the greatest possible structural change--privatization, with the public's role restricted to that of regulation which seeks to ensure fair policy development and recognition of social and other policy objectives.

27. **Policy Sequencing--The Framework of Competition and Regulation.** One important lesson that emerges from the varied experiences of both developed and developing countries is that for privatization to result in significant gains in economic efficiency it must be accompanied by liberalization measures--the real issue is competition and not ownership as such. Policy sequencing, therefore, plays a very important role.

28. The establishment of a general policy framework that corrects for the larger distortions of resource allocation is an indispensable precondition for successful privatization. Fiscal restraint and a cautious monetary policy represent an important first step. They create a decision-making environment that permits systematic business planning. The realistic alignment of the exchange rate is also important for it affects the whole structure of relative

prices. Privatization is also more likely to strengthen allocative efficiency if it is accompanied by trade liberalization measures.

29. The greatest gain in efficiency will arise where competition and privatization are introduced simultaneously. To the extent that technological change has drastically reduced natural monopoly in the provision of long-distance service, privatization in this segment of the market should be coupled to policies of deregulation and liberalization; all legal barriers to entry and other policy-induced constraints should be removed, and regulatory intervention should be kept to a minimum or entirely eliminated. Local exchange service, on the other hand, retains many of the characteristics of natural monopoly, even after the modifying impact of technological change is accounted for. Thus, liberalization and privatization without regulation in local exchange service are clearly more problematic and are likely to run squarely into problems of efficiency. However, given the danger of regulatory failure, extreme care must be exercised in defining the scale and scope of regulatory oversight. Such regulatory intervention should be reduced over time as technological change renders local service an increasingly contestable activity.

30. For deregulation and privatization to succeed care should be taken that government restrictions are not replaced by restrictive business practices. Therefore, it is important that competition laws and policies be enforced in the telecommunications industry. Because the transition towards a more competitive market structure is likely to be a gradual one, the government may wish to retain residual authority to intervene in severe instances of market failure. Taking into account the specific characteristics of the industry and a perceived need to smooth the adjustment process, the government may also choose to modulate the enforcement of competition laws in telecommunications by exemptions targeted to specific practices or situations. In these cases, it is important that such exemptions are granted on a temporary basis and that their justification is regularly reviewed.

31. **Short-Run Policy Initiatives.** In view of the sector's substantial investment requirements, its deteriorating performance, and the history of political interference, privatization appears to be a necessary policy. However, in the short-run the existing public monopoly is likely to remain legally enshrined. During this transition period, substantial consumer advantages and overall benefits to the Brazilian economy could obtain through: the combination of corporatization and the removal of statutory restrictions on competition, i.e., measures of liberalization that do not conflict with the constitutional constraints; and the establishment of an institutional structure that clearly defines separate and distinct roles for policymaking, regulation, and management. More specifically, the government could undertake to:

i. Continue promoting competition and private entry in enhanced services that do not compromise the basic voice monopoly. Private sector involvement should be fully encouraged in value-added services, cellular and paging networks, satellite networks, packet-switched and data communications networks, and international teleports. Cellular telephone networks could develop as an important complement to the fixed network, ultimately providing links to customers more quickly and more cheaply than laying fiber or copper. Satellite networks may be used as an adjunct to the trunk network to allow access to remote settlements which would be too expensive to serve using terrestrial means. Point-to-multipoint satellite applications would facilitate

cost-effective broadcast of voice and data while two-way voice and data applications could offer businesses an effective alternative to leasing fixed lines. International teleports could connect local users directly with international carriers, thereby permitting high-traffic business users to bypass the public network.

ii. Separate operational management activities from the government so as to eliminate political and bureaucratic interference in operational decisions. TELEBRAS could be reorganized as an autonomous publicly-held corporation, with management being accountable to a Board of Directors that is insulated from day to day political pressures. The Board may be comprised of governmental appointees, but with terms of significant duration and under a clear mandate to act independently in achieving specified economic and social objectives.

iii. Establish an efficient, flexible, and well-focused regulatory structure for the sector which can respond effectively to rapidly changing market and technological conditions. In separating the regulatory and operational telecommunications activities, the government could create a strong and effective regulatory agency governed by statute that ensures independence (from both the telecommunications operators and the government), transparency, and accountability in its decision-making. Such an agency could act as a buffer between telecommunications operations and government, ensure performance accountability by the telecommunications operators to economic and social objectives, resolve disputes between competitors and between consumers and operators, and monitor changing industry conditions.

iv. Adopt a price cap method of regulating essential network services. Such a regulatory strategy could mitigate political intrusion on the sector's tariff policies and permit the sector's main operating entity to flexibly respond to new competitive opportunities.

v. Eliminate (gradually, if necessary) the policy of nationwide tariff averaging.

vi. Encourage private sector participation in digital overlay projects that establish reliable, high capacity communication corridors between major cities and business centers in parallel to the existing trunk network. Digital overlay networks could meet the growing needs of businesses for high volume data transmission, most of which are not adequately served by the existing public network.

vii. Fully explore all options for financing and managing local network infrastructure development by offering private investors the opportunity to step into a temporary "build operate and transfer" (BOT) role. The BOT concept could facilitate the flow of private resources into the expansion and improvement of the local public network, the weakest component of the Brazilian system, thereby alleviating a chief bottleneck to providing reliable telephone service.

32. **Long-Term Structure.** The stated objectives of privatization programs in the telecommunications industry tend to vary from time to time as well as from country to country. Four broad objectives have been common internationally:

i) to increase the efficiency with which the sector meets users' demands,

ii) to raise revenue for government activities and reduce the public sector borrowing requirement,

iii) to depoliticize enterprise decision making, and

iv) to promote distributional and political ends.

33. Significant conflicts can arise between these objectives, and their resolution can be an important determinant of the shape of the privatization program. Promotion of efficiency, for example, will require the introduction of liberalization and greater competition in the sector. The government's revenue from the sale of telecommunications assets, on the other hand, is likely to be higher if such steps are not undertaken; a continuation of certain monopoly privileges will reduce the risk perceived by potential buyers (by guaranteeing a stable flow of revenues) and, therefore, it will increase the price offered for TELEBRAS' equity.

34. These tensions in policy making are likely to be especially critical in Brazil, given the country's low telephone penetration ratio and the sector's quality-of-service problems. To the extent that an ambitious investment program to rapidly increase the number of telephone lines is one of the key objectives of privatization, the maintenance of a stable flow of telecommunications revenues and profits will be essential. The magnitude of the overall performance problem in the sector, on the other hand, renders the introduction of competition indispensable. It is the judgement of this report, that the promotion of effective competition is of paramount importance in this sector and that monopoly privileges should be granted only after their economic implications are thoroughly analyzed. In any case, they should be of very limited duration. The objective of competition should be given much greater emphasis than the wellbeing of the privatized entities.

35. Privatization may entail the sale of all or a part of TELEBRAS as a single entity or breaking-up TELEBRAS and selling some or all of the components, such as the long-distance network and the local networks. Alternatively, it may entail more limited options for involving the private sector in the expansion and modernization of the public network.

36. There are several ways in which TELEBRAS can be restructured in order to promote effective competition and regulation before privatization. The operation of local and long-distance networks could be separated, perhaps with several regional network operators as in the United States. The division responsible for supplying customer premises equipment could be an independent entity, and the same is true of TELEBRAS' interests in mobile radio and value added services. Restructuring of this kind can increase significantly the effectiveness of competition and can minimize the regulatory burden because: i) there may be scope for competition between the different component parts which would enhance the incentives of their managers and promote internal efficiency; ii) the effectiveness of regulation would be enhanced because the monopoly of information would be broken; and iii) the separation of network and equipment supply operations would diminish the danger of anticompetitive behavior.

37. The experience of developed countries indicates that in telecommunications, increased competition and structural contestability are made possible by a rapidly changing technology. A more aggressive agenda for reform of public policy suggests significant regulatory decontrol and a system of governance in which service provision is decentralized; in which potential entrants with new products and new techniques have the opportunity to serve the public; and in which competition should be relied upon to solve allocation problems and perform the basic regulatory function on behalf of society. In the context of this "advanced country" benchmark, the following measures represent a potential direction for policy reform in the sector:

a. The national holding company divests itself of all its local operating companies.

b. The divested local operating entities are managed as autonomous public enterprises with no financial links to the federal government, and are limited in providing only local and intrastate service. In addition, some or all of the regional operating companies could be privatized and assigned regulated private utility status.

c. The national holding company is limited in providing only long-distance (interstate and international) voice, data, and video transmission. The new operating entity has no financial links to the government and eventually is privatized. All entry restrictions and price regulation in the long-distance service are eliminated.

d. A local interconnection fee (access fee for connecting to toll carriers) is levied to finance network expansion.

e. A regulatory authority is established to oversee the operations of the local and toll carriers. The regulatory authority establishes equal-access rules governing interconnection arrangements for the national toll market.

38. Alternatively, the national holding company is privatized as a single entity. To meet specified obligations of network expansion, the private entity is granted an "exclusivity" period during which it enjoys a monopoly status. At the end of the exclusivity period, all entry restrictions are eliminated.

1. INTRODUCTION AND OVERVIEW

The primary objective of this report is to examine the structure of the Brazilian telecommunications industry and to analyze public policies designed to improve its performance. The report seeks to provide a rigorous analytical framework for assessing the efficacy of the current regime of competition and regulation in the sector, and to construct needed benchmarks for evaluating its performance. In examining public policy and market structure alternatives in the Brazilian market setting, the report places special emphasis on the rationale for government intervention through ownership and regulation. It offers two types of guidance to Brazilian telecommunications policy makers. First, it undertakes to establish criteria to distinguish those telecommunications activities in which government intervention is desirable from those in which it is not. Second, it seeks to prescribe tools to the regulator that are likely to enhance the public welfare benefits of intervention in activities for which it is deemed necessary.

The Brazilian telecommunications industry is at a critical stage of its development. Until the mid 1960s, the country's telecommunications services were in a chaotic state. Over 800 firms operated under concession from the federal, state and municipal governments. The majority of these firms possessed neither the management nor the financial expertise for the delivery of reliable services, and were of suboptimal scale. The formation of TELEBRAS in 1972 represented an appropriate reorganization of a previously highly fragmented industry handicapped by structural inefficiencies. During most of the period immediately following its reorganization the new system achieved impressive growth rates, making Brazil's by far the largest telephone system among the developing countries and the tenth largest in the world. As recently as ten years ago, the sector was seen as rapidly developing, highly efficient, and offering increasingly modern and reliable infrastructure and services. Today, the sector is confronted with grave and potentially debilitating problems. Brazil's density of approximately six lines per 100 inhabitants is well below those observed in other newly industrialized countries. Modernization of the domestic economy has naturally led to a dramatic increase in the demand for information services. Expansion in the capacity of the telecommunications system, however, has significantly lagged the growth in demand. The existence of substantial excess demand is evidenced by the high premiums observed in the active secondary market for telephone lines. Customers have to wait as long as two years after depositing a substantial installation fee to be connected to the network. Service quality and reliability have deteriorated dramatically. The probability of receiving a dial tone has declined since 1984, while the frequency of call interruption has increased substantially.[1]

The reasons for the deterioration in performance are to be found in the range of public policies towards the sector. For much of this century, in most countries fairness (encompassing the fundamental goals of reasonable rates, absence of unjust discrimination, and universal service) and efficiency in telecommunications have been sought through the public utility paradigm of governmental regulation. This paradigm was expressly premised on the assumption

---

[1] See Telecommunications in Brazil, Ministry of Communications, 1988.

that the industry constitutes a natural monopoly.[2] However, the rapid technological change of the last two decades has generated a host of new competitive opportunities for a significant segment of the telecommunications market; it radically modified the economic parameters of supply, created potential and effective competition, altered the characteristics of demand, and drastically reduced natural monopoly, thereby providing a strong impetus for a fundamental reassessment of regulatory policy. As a result, vigorous regulatory oversight has been succeeded by the institution of policies favoring competition and deregulation. Indeed, the fundamental judgement is now frequently expressed that economic regulation of telecommunications should increasingly rely on competitive market forces as a means for achieving a system characterized by greater efficiency, more innovation, a greater variety of service and price options, and greater responsiveness to the needs and desires of the public.

While in many advanced countries technology-driven deregulation was rapidly becoming a firmly established national policy, in Brazil, the industry remained pervasively regulated. Price controls were imposed almost in complete disregard of the performance implications of the pricing rules involved, subjecting the operating entities to considerable financial distress and substantially impairing their ability to provide continued service. At the same time, the government has, until recently, pursued an autarkic policy that succeeded not only in imposing high network costs upon its national telecommunications entities, but quite likely in diminishing the incentives and ability of the domestic firms to flexibly respond to changing conditions in the world market by specializing in areas of actual or emerging comparative advantage.

It should be noted that in the last few months the Brazilian government has undertaken substantive steps towards decontrol and reduction in the statutory restrictions on competition in the telecommunications industry. The revision of the informatics law and the concomitant relaxation of implicit or explicit trade restrictions, the elimination of the monopoly held by EMBRATEL in data transmission, the opening of satellite and cellular services to private entry, and the provisions for new methods of financing basic network expansion by groups of private parties represent significant policy reforms. However, this report argues that the increasing importance of the telecommunications infrastructure and the magnitude of the sectoral performance problem demand additional fundamental changes in the existing policy framework (e.g., the separation of telecommunications operational activities from government oversight or regulatory activities represents a much needed policy reform to ensure fair telecommunications policy development and to admit competitive entry). In addition, the two most enduring and important regulatory issues in telecommunications, setting prices and deciding the structure of the industry, have not been resolved.

The report is organized as follows. Chapter 2 offers a description of the fundamental economic characteristics of the telecommunications industry. The basic premise is that, in general, the fundamental features of demand and production technology determine the shape of industry structure and many of the

---

[2] An industry is termed to be a natural monopoly if production is most efficiently done by a single firm, i.e., the cost-minimizing market structure calls for a single seller.

characteristics of industry prices. Chapter 3 offers a general perspective of the policy issues that the underlying characteristics of the telecommunications industry give rise to. These issues fall into two general categories, which refer to the two classes of policy instruments available to regulators. One is setting prices, and the other is deciding the structure of the industry. Chapter 4 examines the structure, conduct, and performance of the Brazilian telecommunications industry. The evolution of the sector is analyzed from an organizational and public policy perspective. Particular emphasis is placed on the identification of governmental restrictions upon the structure and conduct of the industry which are likely to have contributed significantly to the observed deterioration in sectoral performance. Chapter 5 outlines the key sectoral issues and presents some broad policy prescriptions on pricing, structure, and the scope for privatization, competition, and regulation in the sector. Chapter 6 offers a detailed package of policy options and proposals for reorganizing and restructuring the business activities of the telecommunications sector, and describes novel financing techniques to generate investment in the sector. Appendix A outlines an analytical framework for examining public policy alternatives from a general perspective and with specific application to the telecommunications market setting. The central focus is a summary of the principal rationales that have been advanced in support of regulation and public ownership in telecommunications and the factors that contributed to the significant reassessment of the public utility paradigm in the last few years. Appendix B examines the historical evolution of the Brazilian telecommunications equipment manufacturing industry. Finally, Appendix C presents a simple description of the basic components of a telecommunications system.

2. THE TELECOMMUNICATIONS INDUSTRY AND ITS ECONOMIC CHARACTERISTICS

One clear lesson from industrial organization analysis is that much can be learned about actual and potential industry structure and performance, and about policies designed to improve the latter, from appropriate information about market demands for the industry's products and about the nature of the productive techniques available to the industry's firms. Indeed, policy decisions regarding the appropriateness of public intervention or views on the efficiency of multiproduct offerings by a single firm (e.g., the desirability of carriers offering both local and long distance services) should be explicitly based on the underlying characteristics and technological conditions of production.

The telecommunications industry encompasses a large number of highly complex and multilayered activities, including: transmission of voice messages, images, and data of various kinds; provision of access to networks; research and development; and manufacturing of supplies. Three markets are easily discernible. These include:

(i) Local exchange service.
(ii) Interexchange or toll service.
(iii) Equipment manufacturing.

The discussion in this chapter will focus on the technical and economic features of modern telecommunications supply as well as the nature of demand for telecommunications outputs. We restrict our analysis to the service segment of the industry. The historical evolution, structure, conduct, and performance of equipment manufacturing, and Brazil's policy aims towards that segment of the industry are examined in Appendix B.

2.1 The Components of a Telecommunications System

A telecommunications system transmits information from a source (generating agent) to a recipient (receiving agent)--the purveyor of the service is uninterested in the content of the message and does not alter its meaning in transmission. This section provides a cursory summary of the technical features of telecommunications systems which determine their applications and economic characteristics. A more detailed description of the technical properties of the various components of a telecommunications system is provided in Appendix C.

In analyzing the economic characteristics of the industry, it is convenient to view telecommunications systems from two related perspectives. First, telecommunications distribution systems may be examined in terms of their physical components. From this vantage, the key element of the analysis is the "facilities network" and its underlying economic characteristics. Alternatively, telecommunications distribution may be examined in terms of the services that it facilitates. From this perspective, telecommunications distribution may be viewed as a traffic directed network.

2.1.1 The Network. A telecommunications network is a system of interconnected, and possibly, disparate facilities designed to carry voice, data,

image, and other traffic units between a multiplicity of users and locations. It is comprised of three physical components: (i) terminal or subscribers' equipment; (ii) switching systems; and (iii) outside plant.

The location of a customer's telephone is called a telephone station. Given the large number of telephones, it would be extraordinary expensive for every telephone to have a direct path to every other one. Consequently, each telephone station is connected via a subscriber line to a local switching center known as the telephone exchange or central office, which connects together an appropriate pair of subscribers' lines, as required, for each telephone call. The network of lines connecting the telephone stations to the switching center is called the local network. Each path which is set up temporarily through the network to facilitate a telephone call is called a connection.

It is generally more efficient to divide a large town into separate areas, each served by its own switching center, rather than having only one centrally located large switch because the lines would be very long and the cost of the network excessive--the cost of providing additional switching centers is more than offset by the cost savings from the shorter lines. To permit connection between customers attached to different switching centers, such centers are interconnected by lines called junctions or trunks. The network comprising all these lines is called the junction network. In a very large metropolitan area, there may be a large number of switching centers. It would therefore be uneconomic to provide trunks between all these switching centers, just as it is uneconomic in a local area to provide direct lines between all telephones. Instead, an additional switching center is installed, which has trunks to all other switching centers and serves solely to make connections between them. This switching center is called a tandem exchange or tandem office. The switching centers that are connected to subscribers' lines, to distinguish them from the tandem exchanges, are called local exchanges or class-5 offices. Different cities and towns are joined by long-distance circuits known as trunk circuits or toll circuits. These circuits comprise the toll network, and the switching centers that they link together are called trunk exchanges or toll offices.

The national public switched telephone network (PSTN), as shown in Fig. 2.1, consists of a hierarchy of networks, each with its own switching center. There is a very natural vertical structure to telecommunications networks. Subscribers are linked to local exchanges, which in turn are linked by trunk to local tandem exchanges. Local tandem exchanges are linked by toll circuits to regional and then to national tandem exchanges. This permits a connection to be made between any pair of telephones in the country. Whenever a route does not exist at a particular level in the hierarchy, the connection can be made by routing it through switching centers at a higher level. Normally, more than one path through the PSTN exists between any two stations. If one path is busy then another can be utilized; this is known as alternative routing. Finally, the national network is connected by an international gateway to the international network which links the countries of the world together.

Subscribers' Apparatus. The apparatus attached to the network by users include telephones, fax and telex machines, television sets, and computing equipment. Large customers may also have their own switching systems to enable calls to be

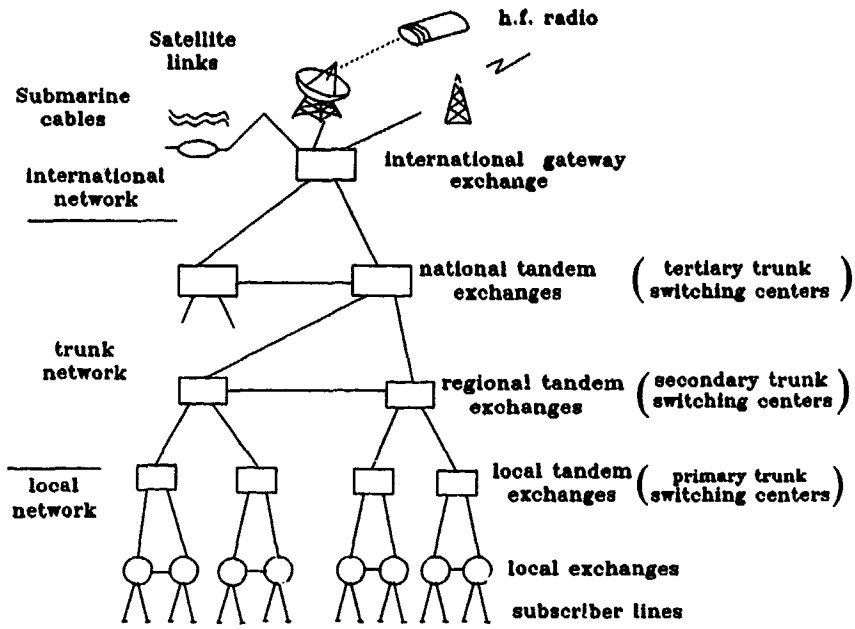

Source: Littlechild (1979)

Figure 2.1: National telecommunications network.

made between their extension telephones and between extensions and the PSNT. These private systems may either be manual switchboards, known as private manual branch exchanges (PMBXs) or automatic systems, known as private automatic branch exchanges (PABXs). The private switching systems illustrate why the distinction between network and apparatus is not always clear. A PABX is both terminal equipment and a part of the overall network.

Switching Systems. Originally, exchanges used to be manually operated--operators connected lines together as requested by subscribers. The operator would search over the switchboard for the appropriate jack into which to plug a cord in order to make the desired connection. Beginning in the 1910s, manual operation was increasingly replaced by automatic electro-mechanical switching technology (Strowger switches). In the Strowger system, the metal fingers of an electromechanical selector would move over a bank of contacts to reach the required outlet. The subscriber's action of requesting a number from the operator was replaced by means of a dial on the telephone. In the last two decades, digital electronic switching systems have been replacing the electromechanical systems. In addition to their substantially higher speeds, these electronic systems enjoy another important advantage: they require much less engineering maintenance than the older electromechanical systems, thus enabling the network to expand without creating excessive manpower requirements.

Outside Plant. The outside plant is comprised of all physical components of the network that are located between terminal stations and switching centers and between switching centers. Originally, open-wire lines on poles were used to provide connections among the various components of the network. These were

subsequently replaced by cables (overhead or underground), varying in size from two to few thousand pairs. For long-distance transmission, coaxial cables replaced the simple copper wires. Advances in technology led to the rapid replacement of coaxial cables by optical fibers, radio, and microwave transmission (both terrestrial and satellite based). To ensure that speech transmission over long distances is of satisfactory quality, the outside plant is supplemented by electronic equipment such as amplifiers; these constitute transmission systems.

2.1.2 Services. "Boundary" lines or service definitions are of critical importance for the evolution of telecommunications policy because they often determine which entities (private or public sector) can offer which services and on what terms and conditions (regulated or not). Service definitions, therefore, have a profound influence on the structure of the telecommunications sector and on the economic and regulatory relationships between this sector and other industry sectors that are heavily dependent on it; these other sectors include data processing, banking, electronic publishing and the provision of electronic market services.

A complex combination of technological and economic forces has led to the introduction of a wide array of new telecommunication services and precipitated significant changes in the telecommunications environment both at the national and international levels. These forces are exerting strong pressures on suppliers and policy-makers alike to revisit traditional policies toward service definitions and industry structures. More specifically, the proliferation of computer devices and the convergence of communications and computer technologies has created both the need and the opportunity for protocol conversion or computer-controlled networks linking together computers with incompatible standards to electronic markets for securities, commodities, or foreign currency and other financial transactions. Such services can be offered by entities unaffiliated with the transmission carrier, which in many countries is a single entity--they can be provided over leased lines that interconnect nodes of computers. It is therefore important to delineate what services can be provided outside the traditional monopoly of a service provider and what services must be offered by that carrier to new service providers.

The process of drawing the definitional lines of demarcation among the various telecommunications services is based on widely divergent criteria and rationales. A cross-country comparison reveals at least two major approaches. The first focuses on technological factors; it seeks to distinguish among services on the basis of their underlying technological characteristics (e.g., formats, protocols, and content of information). The second approach is based on the economic relationship between a specific service and the existing offerings of the monopoly provider (assuming the presence of a primary service supplier as is the case in most countries). Finally, boundaries may also be drawn on the basis of legal and institutional considerations.

Basic vs. Enhanced or Value-Added Services. One key dichotomy that has been the focus of regulatory attention in many countries is the distinction between basic and enhanced or value-added services. Basic service is defined as the offering of a pure transmission capability over a communication path that is virtually transparent in terms of its interaction with customer supplied information. The

standard voice telephony (both fixed and mobile) is the prime example of such service. Value-added services, on the other hand, combine transmission with computer processing that acts on the format, content, code, protocol or similar aspects of the transmitted information, or provide the subscriber with additional, different, or restructured information, or involve subscriber interaction with stored information.

In addition to the basic/enhanced dichotomy, two other definitional distinctions that are now evolving in global telecommunications policymaking are:

(i) between enhanced services and informational or transactional services; and
(ii) between facilities and services.

Enhanced vs. Informational or Transactional Services. The informational and transactional services, are based on the sale and dissemination of information and data processing services to users. Because they also afford the users the capability of executing transactions, they are rapidly becoming interwoven with conventional banking, securities, and commodities businesses. The vendors of informational services offer a distinct electronic service and hence, are dependent on telecommunications for the conduct of their business. However, unlike many enhanced service suppliers, they generally do not compete directly with the providers of telecommunications services.

From the public policy perspective this distinction between enhanced and informational services is of critical importance. Although there may be some similarity between these offerings, informational and transactional services have a distinctly different function--they market information or specific brokerage services through electronic means. To the extent that these services provide some communications capability to their customers, it is almost entirely incidental to their primary business purpose.

Given these basic differences, an optimal public policy would call for a separate regulatory classification for informational services; these services should not become entangled in policies and regulatory processes of prior approval which have been formulated for the communications-oriented enhanced services. Enhanced services, even if less stringently regulated than transmission services, are still subject to a more structured scheme of regulation than traditionally has been the case with information related or transactional services.

Facilities vs. Services. The distinction between the provision of facilities and that of services is the subject of attention in almost every country that has focused on telecommunications policy. Indeed, the demarcation line between facilities and services has profound implications for regulatory policy and critically affects the overall structure of the industry.

The national options for regulatory policy and industry structure can be delineated by comparing the extent of competition in the provision of facilities as opposed to that of services. At the one end of the policy spectrum unrestricted entry in both services and facilities is permitted. At the other extreme, monopoly is retained in the provision of facilities, with some

flexibility with respect to the offering of certain kinds of services on a competitive basis. Between these two approaches, there are numerous variations involving competition in either or both facilities and services.

2.2 The Nature of Demand for Telecommunications Outputs

The telecommunications industry is a part of a broader communications industry which includes the postal service, express freight carriers, and portions of the transportation industry. Telecommunications may also be viewed as a component of the broader information-processing industry. In this section we adopt a narrow definition of the industry by focusing on the provision of basic telephone service to consumers and businesses (which accounts for the bulk of the industry's activities) while we abstract from issues related to the provision of private lines or private networks to business users.

The demand for telecommunications services has a number of distinguishing characteristics.[3] It has the strong periodic element of the peak-load model; it is much larger during the mornings of working days, remains heavy, though less so, during the afternoons of those days, and is lightest in the evenings, at night, and at weekends. Demand has also an important random element--the desire of a user to make telephone calls is to some extent stochastic, depending on random events. However, seasonal variation which is a very important characteristic of demand in other public utilities, is not so marked in telecommunications. In most instances the desire to communicate with others must be satisfied at the time at which the demand is expressed--service must be supplied instantaneously at the lifting of a telephone instrument. In addition, telecommunications outputs are by nature nonstorable. Thus, capacity in the telecommunications is necessarily related to peak demand rather than to average demand. Finally, a subscriber's demand for a communications service includes the demand for potential communications with every other user of the service. A communications service must, therefore, be supplied by means of a network in which information may be transmitted in both directions between any two subscribers. These demand characteristics have important implications for the structure of supply of telecommunications outputs and in particular for the existence of natural monopoly.

Telecommunications outputs cannot be stored and capacity cannot be readily expanded or contracted. Consequently, the variability in demand imposes on service providers the burden of maintaining capacity sufficient to meet the peak levels of expected demand. In other off-peak periods, there is necessarily a level of excess capacity. A low *load factor* (ratio of average demand over a period to peak demand) would be very costly in this industry in view of the high fixed costs underlying its technology.

The wide divergence between peak and off-peak demand does not in itself lead directly to economies of scale or natural monopoly. As far as this factor alone is concerned, the requisite capacity could be provided just as efficiently by a large number of suppliers, with an average load factor corresponding to that

---

[3]See Sharkey (1982), ch. 9.

of the single one. However, the periodic nature of demand does lead to natural monopoly. The capacity of each component in the network of a given supplier must be designed so as to handle the maximum demand expected for that component. If demand is fragmented among several suppliers, it is unlikely that the periodic profile of each supplier would coincide with the original profile of demand. But if multiple suppliers face different peak periods, then it necessarily follows that their combined capacities would exceed the capacity of a single supplier. Figure 2.2 depicts an extreme example of the implications of the noncoincidence of demand. A single supplier is facing a demand profile with two peak periods--a business demand peak during the daytime and a residential peak in the early evening. If demand is fragmented so that business and residential subscribers are served by different suppliers, then their combined capacities substantially exceed the capacity of a single supplier. The excess capacity in the system is an economic waste and the cost-minimizing structure would, therefore, call for a single supplier (natural monopoly).

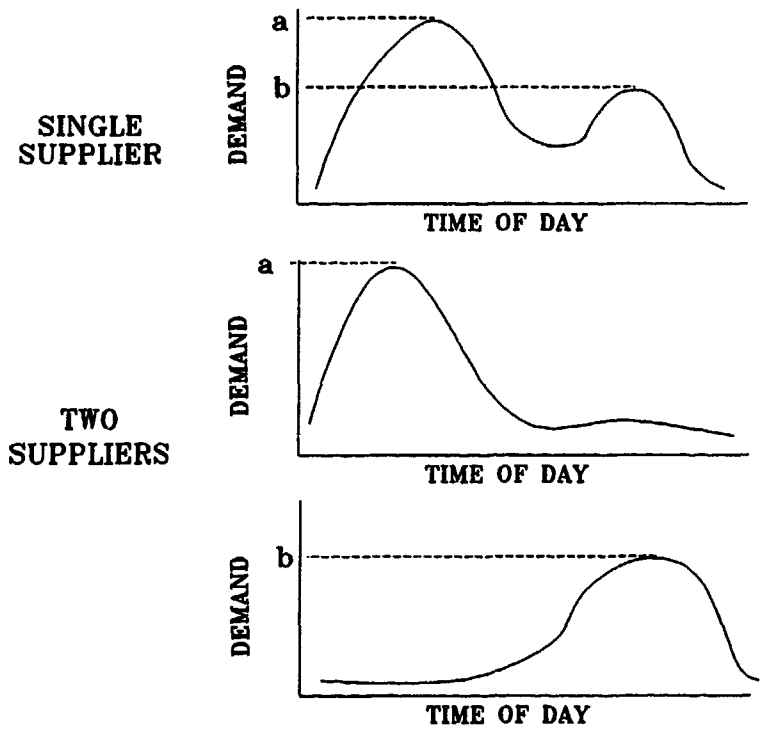

Figure 2.2

In addition to its predictable periodic element, demand for telecommunications includes an important stochastic component. Stochastic demand creates various complications which typically are not considered in the deterministic case. The capacity of a telephone system is engineered to meet demand with the expectation that some calls will be blocked during certain busy times. The probability of a call not being completed because the relevant line(s) are busy is termed the *blocking probability*, and is an important aspect of the grade or quality of service. Blocking is determined by the amount of

switching and transmission capacity installed in the network. More capacity implies fewer blocked calls and a higher grade of service.

The need for probabilistic engineering gives rise to significant economies of scale.[4] A useful measure of output (capacity) of a telecommunications system is the number of hundred call seconds of message time available. Voice circuits on the other hand measure capital. In a typical communications system, for a probability of 0.99 that a call will be completed as dialed, the capacity of a single circuit is 40 call seconds per hour. If we assume that demand is characterized by Poisson arrival (i.e., the probability of incoming calls arriving at the same time can be approximated by a Poisson distribution), with the addition of a second circuit the capacity of the plant increases to 540 call seconds--an increase over 1,000 percent. As the number of circuits increases, the probability that a caller will find an open line increases, and hence the capacity of the system increases. Returns to scale are more pronounced at higher grades of service, and economies of scale decline as the number of circuits increases (e.g., doubling the number of circuits from 64 to 128 increases usable capacity by 120 percent, while as we have noted above, doubling the number of circuits from 1 to 2 leads to an increase of over 1,000 percent in usable capacity). Thus, network fragmentation is likely to impose substantial cost penalties at small levels of demand--a larger number of circuits would be required to maintain the same grade of service.

2.3 Network, Call, and Congestion Externalities

The benefit that a subscriber derives from a communications service increases as others join the system.[5] This is the classic case of external economies in consumption--there are positive externalities associated with the decision of an individual or a household to purchase access to the telephone network. These externalities reflect the total benefits that accrue to other subscribers (businesses and individuals) because of their ability to communicate with the new subscriber. These benefits are spread very diffusely among other subscribers to the network, and most residential subscribers (unlike businesses) receive no direct compensation for these benefits from other subscribers. The residential subscriber, therefore, remains uncompensated for the benefits experienced by other subscribers as a result of his purchase of network access. The total of these uncompensated benefits is the residential network externality.

This positive externality has fundamental policy implications. First, the principle that residential access prices warrant financial support is widely recognized--since private consumption confers benefits on others, the positive externality warrants that the price be supported below production cost by the amount of the gain. It should be noted, however, that the presence of the subscriber externality calls for the underpricing of local access not local

---

[4]See Waverman (1975).

[5]Externalities in communications are discussed in Squire (1973), Rohlfs (1974), and Willig (1979).

usage. Second, it renders interconnection among separate networks very desirable.

In many instances, telephone operators have been able to maintain the price of residential access below the marginal production cost of network access by supporting these costs with net revenues derived from business customers, toll services, and other premium offerings. Thus, the operating entities themselves may partially internalize this externality if subsidizing access raises their profit as well as consumer welfare. In rural areas on the other hand, telephone operators may not be able to support residential access prices because: the geographic sparsity of rural subscribers renders the cost of supplying them with network access much larger than the costs faced by operators in urban areas; rural operators face much lower revenues derived from services to business customers.

A second form of externality is associated with the use of a communication system. Communication is inherently a two-party or multiparty process, yet only one party (the one initiating the call) is charged. In general, the recipient also benefits from the call, i.e., call externalities are positive. However, the tentative consensus seems to be that the call externality is not nearly as important as that associated with access. Users who frequently communicate with one another tend to share costs cooperatively over time by sharing in the placing of calls.

An important negative externality between users arises from the possibility of congestion. A subscriber's attempt to make a call may be frustrated if the relevant lines are busy (blocked) due to the demands of other users. The cost is the wasted effort and the lost benefit of making the call at the desired time.

2.4 Wider Social Benefits of Telecommunications Services

In recent years, there has been a substantial world-wide increase in demand (especially by business users) for better and more varied telecommunications services. A large number of commercial activities, such as banking and international finance, tourism and travel, publishing, commodity exchange, and to a large extent all export-oriented manufacturing, are becoming critically dependent upon global information and efficient electronic exchange. In a global information economy characterized by intense competition for new markets, telecommunications is rapidly becoming a vital component of national economic policy. Consequently, the quality of the information infrastructure is increasingly seen by many as an important determinant of the degree of success achieved by nations in improving their balance of trade and their overall economic performance.

The explosion of demand in telecommunications has been stimulated by the precipitous decline in the cost of information transmission and processing that followed the rapid technological change of the last three decades. Breakthroughs in microelectronics, computers, digital microwave, optical memory, and satellite relay, have dramatically accelerated the pace of productivity growth in information technology. Merging communications and computer technologies have sparked innovations that are radically transforming the very character of most economic activities. In merchandising, retail transactions at the cash register

are integrated with purchasing and inventory management. In manufacturing, world-wide sourcing and production are integrated with inventory and orders. In oil exploration, seismic data from rigs and transmitted and analyzed at a central location thereby facilitating the efficient management of rigs' activities. In publishing, global networks permit a book or a newspaper article written in one country to be mocked up in a second, typeset by a computer in a third, and then transmitted by satellite for printing anywhere in the world.

Information has become a means for firms to perceive and seize new opportunities and new markets, and to satisfy new needs. Information is vital to corporate survival; it is critical to an economy's viability. In fact, in the last two decades, telecommunications policy in many industrial countries has been formulated in the context of far reaching global strategies. In Great Britain, for example, a liberalized telecommunications regime was intended to support and augment London's role as an international financial center. In the Netherlands, national telecommunications policy was formulated so as to stimulate the development of electronic publishing and to promote Amsterdam as a point of access to Europe for international networks, in direct competition with London. A key objective of Australia's telecommunications policy has been to attract commercial traffic destined for Southeast Asia, and to encourage the location of financial services business in Australia. In Japan, national pricing structures were adopted in order to stimulate the growth of sectors with vital links to the information infrastructure.

2.5 Natural Monopoly Elements in Local Exchange Service

It is generally conceded, that the provision of local telephone service is a natural monopoly. Natural monopoly characteristics of local exchange service can be attributed to four general sources.[6]

2.5.1 Economies of Scale and Scope in the Physical Provision of Basic Services. For individual network components, unit costs (that is, total costs per unit of traffic handling capability) typically fall over a large range as rated capacity increases. The local distribution cable represents a clear example of this tendency to decreasing unit costs. A single wire pair is generally sufficient to fully handle the traffic requirements of individual subscribers. The needs of larger users can be met by increasing the number of cooper pairs or by using a higher capacity medium (for example coaxial cable) while still relying on a sole duct and termination equipment. Having competing connections to each location and competing networks of switches within a single neighborhood would normally represent a costly and inefficient duplication of these facilities, which account for a large share of the local exchange's embedded costs. It is therefore efficient to have a single supplier provide all the local cable connections within a particular neighborhood. In addition, economies of scale in switch construction, operation and maintenance imply that the least-cost way of serving local neighborhoods is through a single switch that meets a minimum efficient size criterion.

---

[6]For an illuminating analysis of the natural monopoly characteristics of local exchange service, see Greenwald and Sharkey (1989).

2.5.2 Economies of Scale in Network Planning and Management. Economies of scale in network design and management arise primarily from the unique characteristics of telecommunications demand, which we have already identified. A large network would normally be able to handle randomly varying demands more efficiently than a small one--the greater the number of users, the more likely that traffic will be evenly distributed over time, thus minimizing the economic waste inherent in the excess of capacity over off-peak demand. Relative to several competing small networks, a single large network could also secure economies of network management and coordination (that is, efficiencies in managing the day-to-day flow of traffic over the installed facilities). Larger networks generally have more alternative routes between any two points and can achieve peak-load efficiencies by allocating demands among these routes. Finally, to the extend that network management entails certain fixed costs (i.e., costs that do not vary with the size of the network above a certain threshold level), a single large entity could manage network resources more cheaply by spreading these costs over a larger user base.

2.5.3 Network Externalities. The total gross benefit society receives from the connection of a subscriber to the network is equal to the sum of values received by all the called and calling parties that make use of the connection. This benefit is comprised of two parts. The first part is received by the subscriber; the second corresponds to the external benefits that are received, in total, by all others who can communicate by telephone with the subscriber. If there are costs to transferring and monitoring calls between different company networks, then consumers clearly have incentives to join the network with the greatest number of existing members. Large networks which minimize inter-network transfers are clearly more efficient then small ones. Moreover, given that the second component of the total benefit is larger the greater the total number of existing network members, large networks have greater incentives to recruit new subscribers than small ones.

2.5.4 Advantages in Raising Capital. Scale economies may also be realized in other parts of a large network's operations. A single large network is likely to be able to attract additional capital at a lower cost and in larger quantities than smaller competing networks--an industry consisting of many small firms may be prone to unstable fluctuations and price wars, and hence, would not generally look as attractive to potential investors. In addition, large networks may enjoy economies of scale in marketing and promotion.

2.6 Natural Monopoly Elements in Interexchange Service

In the analysis of interexchange markets, four types of scale economies are generally considered.[7]

2.6.1 Plant Economies of Scale. Plant scale economies reflect the advantages of size inherent in transmitting messages from one point to another--economies that are analogous to those realized at the plant level in the traditional process industries. Some of the individual components of the inter-exchange

[7] See Wavernan (1989).

network display substantial economies of scale. The costs per circuit mile for coaxial cable, one of the two main transmission media in use today, fall sharply as capacity increases. Scale economies for optical fiber technologies are even greater than they are for coaxial cable. However, the investment costs in some of the other components of the typical terrestrial system entail negligible scale effects. To obtain an accurate assessment of the overall economies of scale in long distance service, therefore, we need to examine all the cost elements of the system

There are three basic components of investment costs in a long distance transmission system: 1) real estate and structures, including cable rights of way, buildings, land, and access roads; (2) outside equipment such as cable, microwave towers, and antennae; and (3) radio equipment, including transmitters, receivers, repeaters, and backup equipment. These three components comprise the "basic transmission" costs; they are almost invariably included in all the reported studies of long distance transmission investment costs. There are two additional cost components, multiplex equipment and switching equipment, that are frequently omitted from these studies. Multiplex equipment impose many individual telephone conversations on a single transmission.

Different types of terrestrial transmission systems (wire pairs, coaxial cable, microwave radio) display an overall downward trend in investment cost per circuit-mile as capacity increases (several econometric studies confirm the presence of such economies). The costs of constructing a building needed to maintain the equipment do not, over broad ranges, increase in proportion to volume. In addition, real estate costs exhibit certain indivisibilities (e.g., one access road would be required irrespective of the capacity of the station). The property and radio costs are approximately constant up to about 1,000 circuits.[8] It is generally agreed that scale economies in multiplexing are minor--multiplex costs vary in proportion to the system's capacity. As in multiplexing, economies of scale in digital switching systems are relatively minor.

In a typical system, basic transmission costs account for approximately 50 percent of the total investment requirements. Given that economies of scale are negligible in the other components of the long distance system, the overall returns to scale should be significantly lower than those found in basic transmission. At low levels of capacity, total costs are dominated by property and radio, while at high levels they are dominated by multiplex equipment (for both terrestrial and satellite transmission). Given that multiplex costs are almost linearly related to capacity, scale economies should diminish significantly as capacity increases. Indeed, various studies of microwave transmission confirm the presence of significant scale economies up to about 250 circuits, moderate economies between 250 and 1000 circuits, and insignificant at levels above 1,000 circuits.

2.6.2 System Economies of Scale. Economies of scale at the system level are analogous to economies of the firm--they reflect the extent to which multi-plant

---

[8]See Brock (1981), p. 199.

operation confers economies above and beyond those associated with operating a single plant of optimal scale. It is argued that a large multi-plant telephone company enjoys advantages due to: (i) alternative routing and network management; (ii) the interdependence of investment and capacity decisions; (iii) integration and common standards; (iv) administrative and accounting procedures; and (v) design.

A large single supplier can re-route traffic flows with greater flexibility. In theory, the cost-efficiencies of routing flexibility could become available to competing firms if they agreed on provisions for dealing with traffic overflows. In practice, however, the cost of negotiating and enforcing these contracts is likely to severely limit their usefulness. Given the very large number of possible paths between terminal points (even in relatively small networks), a contractual relation for selecting alternative paths would certainly entail prolonged and costly negotiations.

When scale economies can be realized by expanding capacity in large indivisible chunks, excess capacity carrying costs can be reduced, and the scale economy opportunities exploited more fully through coordinated investment than with autarkic expansion by each separate plant. Also, in an integrated system with a single decision-making unit, all costs associated with revenue division, and the recording, accounting, and transaction of intercompany payments are reduced substantially. If segments of the network were owned and operated by different companies, identical standards would have to be accepted by all companies involved so that the systems could integrate with one another; otherwise the design of interfaces and equipment would more difficult and costly.

2.6.3 Economies of Scope. The telecommunications industry encompasses a number of different product offerings. Its output is readily divided at least into local and long distance service, and so constitutes a classic multiproduct case. In addition to economies deriving from the size or scale of a firm's operations, there is also the possibility that cost savings may result from simultaneous production of several different outputs in a single enterprise, as contrasted with their production in isolation, each by its own specialized firm. That is, there may exist economies resulting from the scope of the firm's operations; cost savings may result from having one telephone company provide both local and long distance service.

Two major factors underlie economies of scope in telecommunications: complementarity of equipment and transactions costs. As an example, consider the provision of an enhanced service. In principle, the functions required to provide such a service could be located at several points in the network: at the customer's premise; in dedicated facilities interconnected to the network; or in the central office itself. In many instances, locating the functions in the central office reduces the need for interface equipment, and minimizes installation and maintenance costs. More generally, economies of scope can be obtained by standardizing the interfaces and equipment for the provision of complementary services.

2.6.4 Contract Economies of Scale. Contracting economies reflect the reduction in costs and risks that may result by organizing activities within the firm. There is a tendency for local exchange monopolies and firms offering

interexchange service to join together to avoid the costs of negotiation of the sets of contracts that make up the system and to avoid being charged the monopoly prices on some links. Internal organization would attenuate the aggressive advocacy that epitomizes arms' length bargaining. Perhaps, the most distinctive advantage of the vertically integrated firm, however, is the wider variety and greater sensitivity of control instruments that are available for enforcing intra-firm in comparison with inter-firm activities. Rather than negotiating a set of contracts, the firm is able to use internal rules that are more efficient.

2.7 The Impact of Changing Technologies

The techniques implemented in the telecommunications industry have undergone a real revolution in recent years. The sector has exhibited a high, continuous rate of productivity increase benefiting from rapid innovation in electronics, computers, materials, and processes. Conventional wisdom holds that changing technologies will ultimate undermine each of the monopoly forces within the industry. These new technologies involve both switching and transmission.

2.7.1 Technological Advance and Costs. The technological change in the telecommunications industry has been a part of the general electronic revolution. Many observers of the industry contend that a "convergence" of computers and communications systems--resulting in technological spillovers and economies of scope--is altering dramatically the economic characteristics of both industries. However, casual empiricism suggests that, overall, quality-adjusted communications hardware costs dropped much less rapidly than those of computers. And within communications systems, it was transmission rather than switching costs that fell the most.

Cost reductions have been particularly impressive in the long-distance and traffic-sensitive portions of the market. Microwave technology combined with satellites, high-capacity fiber optic cables, and improved multiplexing have vastly increased capacity and greatly reduced the cost of providing service. The cost of fiber optic cables declined from $10 per meter in 1975 to $1.75 in 1980 and further to $.60 per meter by 1985. Satellite earth stations have fallen in cost from $2 million each in 1965 to $30,000 in 1981 and further to $5,000 by 1986. The cost of providing long-distance channels decreased from about $33 per circuit mile in the late 1950s to less than $4 in the late 1970s.[9]

In switching, digital computer driven equipment has reduced maintenance costs and software innovation has expanded substantially the range of services. Within the network, these advances have allowed carriers to supply customers with specialized private networks composed of shared facilities under software control. Switching has also moved closer to the final user, with versatile private switches (PBXs) competing with local exchange carrier switches to supply a wide range of office communications services.

Where usage is not concentrated, however, technological change has not had nearly the same impact on costs. The nontraffic-sensitive and customer-specific

---

[9]See Bolter et al (1990), ch.V.

loop that connects every subscriber to the central office have not experienced anywhere near the technological change that has occurred in the long-distance and other traffic-sensitive portions of the industry. For low volume nodes, the copper cable pairs continue to represent the least-costly technology. However, fiber optic distribution and microwave bypass are becoming economically viable in large office buildings.

Advances in computer software and data storage technologies are facilitating significant process innovations throughout telecommunications. Long-distance connections are now established and calls are routed dynamically, according to the availability of network links and switches. Furthermore, new low-power radio technologies promise to link subscribers via lightweight, vestpocket telephones. Also, broadband networks, utilizing high-speed switching and fiber optic links to the consumer, may ultimately provide a broad array of video, data, and personal communications services.

2.7.2 The Impact of Changing Technologies on Natural Monopoly. As it was noted above the impact of technological change has been massive but uneven. Cost reductions have been particularly notable in long-distance transmission. Access technologies have advanced less rapidly. Although technological change has driven the entire industry, it has undermined natural monopoly in interexchange markets much more rapidly than in local exchange service.

Local Exchange Service. Digital technology has been rapidly supplanting analog applications in switching. Digital switches, whether PBX's or Central Office switches, are now available in an almost continuous range of sizes, from twenty to more than 10,000 lines. Systems for load balancing, billing, number changes, and other housekeeping functions are now available in automated form in most of these switches. Furthermore, the development of remote maintenance and housekeeping technologies implies that even relatively small firms can capture economies of scale in these overhead activities by centralizing them. As a result, economies of scale in overhead activities and in providing individual switching nodes (which were significant for analog systems) are now probably small and certainly declining.

New transmission technologies at the local exchange level include cable based telephone access, cellular radio, and direct microwave links to local or long distance switching nodes. Cable based access exhibits economies of scale similar to those of wire based access. Although cellular radio permits a more efficient use of the spectrum relative to existing mobile offerings, still the problems of allocating scarce radio frequency limit the number of allowed carriers (currently two per area). Finally, microwave links typically entail large fixed costs and large carrying capacities and are thus limited to relatively high volume transmission routes. As such, they do not offer a viable option for linking individual users to the basic telephone network. Overall, despite the development of new transmission technologies and the concomitant increase in the number of potential competitors to the local exchange carriers, economies of scale in local transmission and distribution have not been as yet eliminated.

The impact of new technologies on network planning and management economies is more ambiguous. Advances in computer technology are likely to reduce the cost

of planning and managing network resources. To the extent that the cost of such overhead activities is fixed, the relevant economies of scale are reduced. On the other hand, increased computing power may provide more scope for active network management and increase the advantages enjoyed by the competitor with the most extensive network. Similar countervailing forces may be at work regarding network externalities. New technologies are likely to increase the ease with which calls can be monitored and transferred between networks. The disadvantage to a customer of joining a small network, therefore, may be offset by the ease with which he can communicate with other networks. On the other hand, innovation is likely to appear first in large networks, where the external benefits of adopting the new technologies are large. Thus, more rapid innovation may reinforce the advantages of large networks. The important point is that the impact of new technologies in reducing natural monopoly elements in telecommunications is likely to be far smaller in the areas of network externalities and network management economies than in the areas of returns to scale for basic service provision.

Rapid technological change is likely to accentuate the advantages of large networks in raising capital and, hence, in that limited context it might actually reinforce the argument for natural monopoly in telecommunications. A generation ago, the industry enjoyed a stable environment characterized by an orderly rate of technological change, narrow product substitutes, standard and compatible equipment, identifiable product and service boundaries, long and predictable product economic life, limited number of suppliers, and stable pricing arrangements. Today, depreciation life is contracting, rate base accounting is being assaulted by accelerating technology, investment alternatives are proliferating, service boundaries are coalescing, and allocation is buffeted by market diversity and market segmentation. Technological change may, therefore, effectively increase the risk perceived by investors because : (i) product innovations face an inherently uncertain reception from consumers; (ii) stable pricing arrangements are no longer feasible in the face of rapid change; (iii) a rapidly changing environment increases the likelihood that investments are made in wrong technologies or generation of equipment; and (iv) the proliferation of suppliers raises the risks of non-standard and incompatible equipment. As a result of this instability, the difficulty of raising capital on acceptable terms is likely to increase and the advantages of having a single stable service provider may become greater.

In summary, local exchange telecommunications retains many of the characteristics of natural monopoly, even after the modifying impact of technological change is fully accounted for. Nevertheless, the emergence of competing access media has greatly increased potential entry or competition for the local exchange market and is likely to effectively discipline incumbent behavior in this market as the incremental costs for these different media (of providing local exchange access) converge over time. Furthermore, the dramatic shifts in the switching and trunking technology are likely to significantly alter the way in which local services are provided; there will be an increasing substitution away from the relatively expensive service--access lines--and towards the relatively cheap service--switching and trunking. To the extent that remote switching and trunking are becoming viable substitutes for access lines, market power in the local exchange market is likely to diminish substantially. Finally, as it was noted above, some of the most dramatic manifestations of the

technological revolution in telecommunications have been in the traffic sensitive portions of the business. Relatively high volume routes within densely populated areas (e.g., downtown business districts, industrial parks, large apartment buildings) can be now efficiently supplied by an entity that does not necessarily provide service in the intermediately surrounding geographic area.

Interexchange Service. The economies of scale and scope in basic service provision which still characterize local exchange service in many areas appear to be far less important and perhaps non-existent in the long distance market. To begin with, basic transmission is the only component of the long distance terrestrial system that exhibits any significant economies of scale. When the other cost components of the system (e.g., multiplexing and switching) are also included, overall economies of scale appear to be substantially lower. Microwave was conducive to multifirm transmission facilities over many routes -- economies of scale in microwave transmission were insignificant at levels above 1,000 voice grade circuits (and only moderate between 240 and 1,000 circuits). In addition, satellites present entirely different operating characteristics relative to cable technology. Under certain operating conditions and system configurations, satellite communications can make entry economically attractive on small scales between particular points. Fiber optic technology, on the other hand, exhibits significant economies of scale over almost the entire range of output. However, as was noted above, technological change has led to impressive reductions in the cost of fiber optic cables. As a result, the portion of the overall costs of interexchange service that is attributable to transmission has declined. Given that the other components of the system (including maintenance and other housekeeping functions) exhibit insignificant scale effects, overall economies of scale are likely to be low.

3. CURRENT ISSUES IN TELECOMMUNICATIONS POLICY

Having identified some of the underlying characteristics of the telecommunications industry, we now explore a number of the policy issues to which they give rise. First, we seek to identify appropriate deregulation or regulatory reform strategies which recognize the potential market power of current local exchange service and the largely competitive character of interexchange markets. Second, we consider questions related to pricing policy. We review the alternative approaches to traditional cost-based/residual pricing regulation that policy makers have begun to consider as a means of encouraging monopoly efficiency, promulgating technological innovation, protecting consumers, and reducing administrative costs. Third, we consider structural issues; whether local and long-distance networks should be separated; policy towards entry--the desirability and feasibility of various kinds of competition (actual or potential) in network operations.

Some of these issues are clearly highly related. A decision to permit entry into a market, for example, greatly constrains the price-setting abilities of the incumbent firms (and of the regulators), and pricing policies in turn influence the entry decisions of potential competitors. Also, price structures involving cross-subsidy are likely to be undermined if entry is allowed.

3.1 Alternative Strategies for Regulatory Reform

The cost to consumers of any uneconomic misallocation of telecommunications resources has been steadily increasing in view of the rapid pace of technological development. The world is fast approaching a new Information Age in which a significant portion of productive global resources will be directed to collecting, analyzing, transmitting, and reporting information. Only sound regulatory policies that optimize efficient use of a country's telecommunications resources will allow continued innovation (especially by the private sector), and ensure that society does not suffer an unnecessary reduction in its economic welfare. Regulatory policies must ensure that society does not have to invest more resources than necessary in its telephone network and that investment in the network be allocated so as to maximize benefits.

3.1.1 The Case for Deregulation. In telecommunications, a primary public interest goal is the control of monopoly power and the protection of the consumer. For much of this century and in most countries in the world, fairness and efficiency in telecommunications have been sought through the public utility paradigm of governmental regulation. This paradigm has been expressly premised on the assumption that the industry constitutes a natural monopoly. Under the public utility paradigm, it is thought to be efficient to grant a private or public company a monopoly on the provision of telecommunications service. The govenrmentally bestowed monopoly, however, creates strong incentives for overpricing and reduced output of the monopoly services. In addition, governmentally granted market power can be used to leverage other markets through anticompetitive conduct, such as the cross-subsidization of competitive offerings through improper cost allocation between regulated and unregulated activities.

Concern about these efficiency and equity impacts provides the major

rationale for government intervention to guide the market to a socially efficient solution. The regulatory framework is intended to ensure that the monopoly attains the cost-efficiencies of scale while setting prices in a manner which does not abuse its market power. Thus, to prevent the reduced output of monopoly services, the public utility paradigm strictly controls entry and exit, regulates price and the conditions of service, and imposes ubiquitous service obligations. The use of governmentally granted monopoly power to leverage other markets, on the other hand, is prevented by controlling the prices of regulated services and by severely restricting the utility's participation in competitive activities.

Critics of monopolistic provision question the efficiency of this regulatory framework. They argue that government intervention in telecommunications through regulation and ownership has imposed significant direct and indirect (or opportunity) costs on society. The public utility paradigm allegedly exacts significant efficiency costs in resource allocation by: (i) distorting prices through the use of average prices for groups of services rather than individual prices for the services in each group, the shifting of costs to future periods by using uneconomically slow depreciation rates, cross subsidization of local services by long distance services, and the cross subsidy from business to residential customers; (ii) distorting investment decisions and limiting private incentive to innovate with new technology; and worse, (iii) affirmatively discouraging innovation that would render obsolete large quantities of embedded equipment that is included in the rate base.

Regulation also tends to discourage price competition, provides only limited incentives to cut costs or increase managerial efficiency and, generally, limits the choices available to consumers--regulatory price ceilings prevent the supply of higher-quality offerings, while regulatory price floors discourage the supply of lower-quality, inexpensive options that many consumers would find attractive. Furthermore, regulation tends to react much more slowly than the marketplace to changing technological conditions, and frequently limits the ability of market participants to respond quickly to changes in demand and supply. In addition, regulation entails direct and indirect administrative costs. The experience of interexchange markets reveals that firms and other interested parties may be prepared to expend considerable resources as intervenors in the regulatory process. Finally, regulatory ratemaking not only leads to significant administrative costs, but also is subject to serious practical difficulties, making terribly elusive the goal of keeping prices close to costs.

It is generally agreed that the interexchange markets are structurally competitive--the natural monopoly characteristics of long-distance services have been significantly modified by technological change. When cable technology was replaced by microwave and satellites it became possible for several different firms to transmit calls on many routes without significantly increasing unit costs. Economies of scale in microwave transmission were very strong up to about 240 voice grade circuits, moderate between 240 and 1,000, and insignificant at levels above 1,000 circuits. It is important to note that the more recent fiber optic technology is characterized by significant economies of scale over almost the entire range of output. However, the cost of fiber optic cables has declined dramatically. As a result, the portion of the overall network costs that is attributable to transmission has declined. The other components of the

interexchange system (including maintenance and other housekeeping functions) exhibit insignificant and probably declining scale effects. Therefore, despite the increase of economies of scale in transmission, overall economies of scale in interexchange service are probably small and declining.

Despite the development of new transmission and switching technologies, local exchange service continues to be a natural monopoly due to increasing returns to scale in network design and management. However, changing technologies are slowly undermining each of the natural monopoly forces. In addition, recent economic and technological developments have greatly increased the cost of continued regulation. For these reasons, the actual policy prescriptions which have been made by advocates of deregulation have much to recommend them.

An optimal regulatory strategy in telecommunications should, therefore, seek to isolate the segments of the market still considered to involve technological natural monopoly, i.e., local telephone service, from segments that can no longer be taken to constitute natural monopolies, such as long-distance services and the provision of terminal equipment.

In addition to natural monopoly, the network externality, or universal service objective, is the other form of market failure that prompted regulatory intervention in telecommunications. At low levels of household telephone penetration, the network externality can be a significant source of market failure, and in several countries it has been extremely important in the development of the system. If deregulation occurs, this form of market failure is likely to return and hence some other means of control need to be identified.

3.1.2 Promoting Regulatory Reform. The primary objective of regulatory reform is to improve the framework of public control within which the telecommunications industry operates. At least in principle, it can be pursued entirely within the context of monopolistic service provision; it seeks to ensure that services are provided on a basis that is consistent with the goals of economic efficiency and social equity.

The precise characteristics of regulatory reform obviously depend on the specific circumstances of individual countries: in particular, their regulatory background, and administrative and political institutions. In general, regulatory reform efforts aim at establishing a more arms' length relationship between the government and the service providers, so as to ensure that these have the flexibility needed in a rapidly changing market environment.

The traditional model for the telecommunications industry entails a single state-owned service provider that has monopoly on all aspects of the market and is solely responsible for all operational decisions. Under this model, there are few, if any, competitive market elements, and no real requirement for a separate regulatory function. Rate designs normally reflect social, rather than efficiency, objectives, and subsidies are usually pervasive and well hidden. Under this model, telecommunications services often also subsidize other sectors of the economy. Perhaps the single most important element of any regulatory reform strategy is the separation of telecommunications operational activities from government oversight or regulatory activities. This is necessary to insure

fair policy development, to insulate the telecommunications industry from short-term fluctuating political pressure, and to ultimately admit competitive entry.

Governments have a strong orientation to pursuing policies with short-term benefits, even where these involve high long-term costs. The financial targets imposed on public enterprises have frequently been highly variable from year to year, creating uncertainties in the enterprises' planning. When budgetary constraints are tight, governments can also use public enterprises to advance political and social goals which have no direct relation to those enterprises' main function. The costs imposed on the telecommunications carrier by public service obligations should be accounted for as carefully as possible and made publicly known. In addition, financial targets and other requirements should be set on a medium-term rather than on an annual basis.

In some countries efforts for regulatory reform could prove to be unduly limited and constrained by the inherited problems and, therefore, may not be sufficient for ensuring optimal performance. Experience indicates that governments do not, in general, easily and willingly forego using the instruments they have in hand. So long as the publicly-owned telecommunications operators comply with government requests, they may face little pressure to make efficient use of their resources. In those cases, the only means for breaking bureaucratic inertia, political favoritism, and apathetic service delivery is through more fundamental and radical structural change--frequently privatization.

3.2 Pricing Policy

Historically, almost all economic regulation has the same general approach to pricing. First, overall prices are set so that the firm covers its costs of doing business, including a reasonable return on its invested capital. The primary objective is to protect consumers from monopolistic exploitation; hence the focus is on controlling overall prices by controlling profits on invested capital. Second, regulators set the structure of prices.

Regulators generally set the structure of prices on the basis of perceptions of distributional equity. Three principles enter into these deliberations. First, prices should be nondiscriminatory, i.e., they should be the same for similarly situated customers. The second principle is to provide ubiquitous service. The final is the "value of service pricing" principle which is a means for reconciling conflicts between the other two principles.

In telecommunications these principles produced the policy of residual pricing. The goals of universal service and nondiscrimination dictated low residential prices. Value of service called for lower prices in rural areas. These pricing principles caused revenues for basic service that were below cost. Value of service pricing for other services was then imposed to generate the additional revenue needed to cover costs. It should be noted that while costs were explicitly taken into account in setting the general level of prices, they played no direct role in the determination of the structure of prices.

3.2.1 The Inefficiency of the Historic Pricing Policies. Economic efficiency requires that services be priced at their marginal costs. A telecommunications

system incurs two types of costs. The first costs are associated with connecting a subscriber to the network and are, therefore, non-traffic-sensitive. In contrast, a subscriber's usage of the system gives rise to traffic-sensitive costs that vary with the time and duration of connection, the distance traversed by the call, and whether the call is intra- or interexchange.

An efficient telecommunications pricing system would offer a two-part tariff to each subscriber. One part would be a fixed access charge, levied either as a lump-sum or on a periodic basis, to recover the marginal non-traffic-sensitive costs of connecting the customer to the network. This fixed component would vary substantially among subscribers depending on their locations and other factors. The second component of the two-part tariff, related to traffic-sensitive costs, would vary with the subscriber's usage of the network and would reflect the mix and duration of intra- and interexchange calls and the times the calls were made.

A comparison of the standard telecommunications pricing policies with the above principles reveals three sources of inefficiency.[10] First, access and usage rates are generally averaged over a large number of subscribers and as such they do not reflect individual geographic, temporal, or other factors that cause true access costs to vary across subscribers. Nor do local or long-distance rates reflect the large differences in the usage-sensitive costs of calls between persons in different locations. Second, typical local rates do not take into account the amount of local usage at peak hours when additional calling requires extra capacity. The standard practice of providing service on a flat rate basis, with no charge per call or per minute, clearly leads to excessive local calling. Third, a significant portion of the costs of providing access to the network is normally recovered in charges for using the system despite the fact that those costs are largely independent of usage. As a result, the basic monthly service charge is generally low, encouraging consumers to become subscribers, or even to order second lines, when the value to them of that access is less than the cost to society of providing it.

Inefficient Pricing as an Instrument of Cross-Subsidization. The standard inefficient telecommunications pricing practices are the consequence and instrument of a complex system of cross-subsidies between different subscriber groups. First, toll markets have their costs artificially inflated above direct costs in order to provide a flow of revenues to local operating companies. Second, business subscribers that are the predominant users of long-distance service subsidize residential customers. However, businesses normally pass their costs on to their prices, which implies that residential telephone service is effectively being subsidized by a tax on all the purchases of goods and services produced by businesses. Third, urban subscribers subsidize customers in remote rural areas. Fourth, customers with preference for making local calls during off-peak hours subsidize those with preference for peak hours.

Various arguments relying on the economic characteristics of the telecommunications market and the relationship between toll and local service

---

[10] See Kahn (1984).

have been offered to justify the subsidization of the latter from the former.

i) **Externalities.** The simplest and most familiar argument in favor of the residential access subsidy is that subscription to the network yields benefits to others. In principle then, one could justify making heavy business users, who presumably get most of the benefit from the system, subsidize the basic access charge so that they can continue reaching those who would otherwise drop off the network. It should be noted, however, that the presence of the subscriber externality argues for the underpricing of local access and not local usage. Consequently, a local measured service provides a better vehicle for the satisfaction of the subscriber externality than does a flat-rate local pricing scheme that does not allow for the distinction between access and local usage prices.

ii) **Demand Complementarity.** Another argument that is frequently advanced to justify the subsidization of local service--both access and usage--from toll, is that both access lines and local usage are required (at least with current technologies) for the placement of toll calls; thus, it is argued, proper costing would allocate part of these local costs to usage. It is true that an access line and a local connection to the toll switch are prerequisites of each toll call. Still, demand complementarity does not imply that separate markets should not exist for each of these three elements of a typical toll call. In fact, optimality requires that each of these should be costed and priced separately. Access costs are not caused by toll or any other traffic. To the extent that a toll call affects local traffic-sensitive costs, its price should include a component that recovers the cost of transport to the toll switch. In principle, there is no difference between a local call to another local subscriber and a local call to the point of presence of a toll carrier.

Along similar lines, it is being asserted that customer access is not a service, but instead merely a prerequisite to the provision of "real" telephone services, i.e., to placing and receiving calls. But such an assertion is in itself merely semantic and the inferences drawn from it are, almost entirely, fallacious. First, the defining characteristic of a service is that it is or would be demanded in its own right. By that criterion, access is clearly a service. Even if most customers were not interested in access in order to place calls, many would still want it if only to receive calls. Second, the relevant question is not whether access is a service but rather what is the efficient way of recovering its costs. In that context, two pertinent economic questions need to be addressed. Does subscriber access have a separate identifiable incremental cost associated with it, and does charging for access separately serve a purpose? The answer to both questions is definitely yes. The connection of a subscriber to the network entails scarce resource use even if the subscriber never uses the connection; and an important efficiency objective is served when consumers are confronted with prices that reflect the respective

incremental costs to society of their taking more or less of each available service.

iii) **Preserving Service for the Poor.** One important qualification to the proposition that all marginal access costs should be recovered in the basic monthly charge is that many poor people would be excluded by purely cost-based prices from enjoying what has become a basic necessity in modern society. However, economic efficiency is not necessarily incompatible with the important social goal of helping the poor. The standard practice of holding prices down for all (including those who need it the least) in order to help the poor ends up injuring almost everyone. If a subsidy is retained for basic service, it has to be less haphazardly distributed and more tightly targeted at those who really need it. It is very inefficient to lower tariffs for a large percentage of telephone users in order to help the small percentage of those who are disadvantaged.

3.2.2 **Second-Best Pricing.** Because of economies of scale in important parts of the business, it is likely that even strict marginal-cost pricing would not provide telephone companies the revenues they are entitled under traditional regulatory principles. This under-recovery is made worse by the presence of the subscriber externality. Prices would, therefore, have to somehow depart from marginal cost until the revenue constraint is satisfied. It is important to recognize, that not just every departure from marginal-cost pricing is acceptable from the economic efficiency point of view. These departures should be chosen so as to minimize the resulting welfare loss.

The first approximation to a resolution of this dilemma with minimum loss of economic efficiency is provided by Ramsey Pricing. This pricing rule calls for markups above marginal costs that are inversely proportional to the elasticities of demand for the several services, in order to elicit the requisite increase in total net revenues. To the extent that prices must depart from marginal costs in at least some markets, if such departures are concentrated where demand curves are the steepest--the most inelastic--the welfare loss will be minimized.

It is immediately clear that the historic pattern of telephone pricing conflicts significantly with the above prescription. It generally imposes the largest markup above marginal cost in long-distance calling, the service whose demand is the most elastic, and the smallest markup (in fact a negative markup) on access, the demand for which is the least elastic. Moreover, it recovers a substantial portion of the total revenue requirements of subscriber plant costs from the small percentage of total calls represented by long-distance usage. This perverse pattern of markups can cause substantial losses in economic welfare--much more than the movements from first- to second-best pricing rules.

3.2.3 **Rate-of-Return/Residual Pricing vs. Price Cap Regulation.** Rate-of-return or cost-based regulation is the predominant form of regulation in the telecommunications sector around the world. Regulators have been attracted to this mode of controlling the behavior of monopoly service providers because conceptually it seems fair to both the regulated firm and its customers. It

permits the firm to earn sufficient revenues to cover its costs, including a fair rate of return on equity. It is also designed to protect consumers from the monopolistic pricing distortions that would normally arise if the monopolist could freely exercise its market power.

Experience with rate-of-return regulation has taught us, however, that even when executed correctly, it imposes nontrivial economic losses. It creates perverse incentives associated with cost-plus contracting. Rate-of-return regulation has four major shortcomings: it does not give firms strong incentives for cost-minimization since their costs are recovered in their rates; firms do not have incentives to be more efficient and innovative since this form of regulation fails to distinguish increased earnings attributable to increased efficiency from increased earnings attributable to the exercise of market power; firms have incentives to shift costs from services in which they face competition to services in which their market power permits them to recover revenues above the economic costs of providing the service (and hence to improperly cross-subsidize); and firms have incentives to inflate their rate base. In addition, the framework needed to support this mode of regulation is elaborate and often cumbersome--its administrative costs are substantial and growing. During periods of inflationary buildup, the administrative cost problem becomes particularly pronounced; this is because the regulated entities are forced to repeatedly seek interim rate relief.

A category of alternative regulatory strategies may be broadly classified as social contracts. Under the general strategy of social contract regulation, regulators first delimit a group of core activities that they continue to regulate and then stipulate a list of constraints that the regulated entity must agree to meet in the future; in exchange, regulators agree to detariff or deregulate entirely other competitive or nonessential services that the utility may offer. As long as no stipulated constraints are violated, the regulated entity may price freely any service; if it reduces costs, it may keep a share of the resulting profits.[11]

Price caps represent a form of social contract regulation. Under price caps, aggregate index ceilings are placed on pre-specified groups of services (called "baskets"); the regulated entity can price any service freely, so long as no index ceiling constraint is violated. Index ceilings are adjusted periodically to allow for expected cost-inflation (easily observable changes in costs generally lying beyond the entity's control) and a pre-committed rate of productivity improvement. The regulated entity retains any profits that may result from cost-cutting or technological innovation.

The price cap model offers a number of advantages as compared to cost-based regulation. Under price cap regulation, the regulated entity has every incentive to minimize costs and adopt efficient technological improvements because any increases or decreases in its costs are not automatically passed through to consumers; the utility has no incentive or opportunity to strategically distort its reported cost data given that costs do not enter directly into the price cap formula; the regulated entity has no incentive to expand its rate base

[11] See Einhorn (1991), ch.1. Also see Brennan (1989), and Cabral and Riordan (1989).

uneconomically because the price cap model specifies neither a rate base nor a maximum rate of return on invested capital; there is no opportunity for utilities to shift rate-based costs of competitive services on to their captive monopoly activities; and the administrative costs of regulation are reduced. In addition, price caps might also offer consumers greater protection against sudden steep rate increases than cost-of-service regulation can provide. Finally, the price cap model could also reduce the resources competitors feel compelled to commit as intervenors in the regulatory process.

Different ways of interpreting what is meant by a price cap could have significant implications for both regulated carriers and consumers--could offer consumers different degrees of protection against rate increases and give carriers different degrees of flexibility to change rate levels or even rate structures for capped services. At one extreme, the cap requirement could be interpreted to impose a ceiling on the average rates of capped services overall. This interpretation would afford the carrier broad discretion to adjust its rate levels and structures for such services. All tariff provisions that altered the rate structure for a capped service but were revenue neutral would be presumed lawful. At the other extreme, the cap requirement could mean a ceiling on the rate associated with each element of a service. Under this approach, a tariff filing for a service that leaves the rate structure for that service unchanged and also either lowers or leaves unchanged the charge for each of its rate elements, is eligible for streamlined regulation.

In between the two extremes are a large number of possibilities for defining the concept of price caps. For example, individual price caps could be imposed for certain services, while other services are grouped together and subjected only to a limit on how much their rates could on average increase. For some groups of services such a group rate constraint could be supplemented with one that limits the amount by which any individual service's rates could rise. Clearly, the central issue is which interpretation of price cap strikes the best balance between the primary objective of protecting consumers against unreasonable charges for services and providing carriers with sufficient flexibility to introduce innovative services quickly and attain the most efficient mix of services their networks permit.

3.3 Structural Issues

Structural regulation determines which firms are allowed to engage in which activities. In the telecommunications industry it is often concerned with the extent to which firms operating in one regulated market are permitted to enter others--should, for example, a telecommunications entity be permitted to vertically integrate across manufacturing, interstate toll service, and local exchange service?. Thus, an important form of structural regulation is functional separation in which entities are prohibited from undertaking different activities simultaneously.

3.3.1 Vertical Integration. An important reason for vertical integration has to do with investment incentives. As asset specificity becomes more important, exchange relations take on a progressively stronger bilateral trading character. The reason is that parties to such trades have a stake in preserving the continuity of the relationship. At the same time, however, problems of adapting

bilateral contracts to changing circumstances normally arise. Autonomous market contracting is thus supplanted by more complex forms of governance as asset specificity deepens. Some transactions may be removed from the market and organized internally instead. Vertical integration may be viewed then as a response to relatively high costs of market exchange.[12]

In an incentive sense, internal organization attenuates the aggressive advocacy that epitomizes arms length bargaining. Even if interests are not perfectly harmonized, they are at least free of representations of a narrowly opportunistic sense. The most distinctive advantage to the firm is the wider variety of instruments that it has at its disposal for enforcing intrafirm in comparison with interfirm activities.

The main argument against vertical integration is that it can be used strategically to achieve anticompetitive effects. Established firms may use vertical integration to increase finance requirements and thereby to discourage entry if potential entrants feel compelled (and they frequently do) to adopt the prevailing structure. Moreover, firms may use the excess profits they realize in activities where they enjoy market power to finance aggressive behavior in markets where they face strong competition.

In the specific context of the telecommunications industry, the structural issues that regulators frequently need to address are whether: the activities of network operation and equipment manufacturing should be separated; local, long-distance, and international operations should be separated; fixed and mobile network operations should be separated; the activities of network operations and the retailing of services over the network should be separated. These questions generally entail a tradeoff between the cost efficiency advantages and the anticompetitive disadvantages of integration. The case for allowing vertical integration, therefore, depends upon the effectiveness of conduct regulation.

As long as production of terminal equipment is not a natural monopoly and the equipment manufactured by different firms do not produce noise or other forms of harm for the telephone network, regulatory policy should encourage access to local telephone systems on equal terms. Freedom of entry is preferred over arrangements that bar local telephone operators or other firms from selling telephone equipment. On the other hand, vertical integration into equipment manufacturing would enable the monopolist to evade regulation by transferring monopoly prices in services to the manufacturer in excessive equipment prices. Another concern is that the integrated monopolist might engage in economically unwarranted self-dealing by purchasing from its own affiliate even if competitors offered superior equipment at lower prices.

The issues involving local versus long-distance services are more complex, in part because of the common costs problem and in part because of the efficiency derived from coordinated operation of an integrated network. For example, as we noted in chapter 2, such an efficiency arises because a large integrated operator commonly routes calls during busy periods through distant switching centers if nearer ones are operating at full capacity. This is only one of a variety of

---

[12]See Williamson (1971).

network-wide planning decisions that may make production less costly when local and long-distance operations are contained within one firm.

Dominant telecommunications carriers might use their market positions in basic transmission services to discriminate against other vendors' competitive offerings that rely on those basic network services. For example they could adopt network interconnection standards so as to prevent or limit competition from other carriers. Dominant operators could also engage in improper cost subsidization of competitive services by regulated services.

Regulators generally face a very difficult, if not hopeless, task in preventing cross-subsidization of competitive services, discriminatory acts against competitors, and, ultimately, evasion of regulatory objectives concerning captive monopoly customers. Given these emerging realities of regulatory practice, a policy of "quarantine" whereby the regulated monopoly carrier is prevented from participating in potentially competitive markets might be appropriate. In this context, the separation of local and long-distance services represents an attractive structural option.

4. THE BRAZILIAN TELECOMMUNICATIONS INDUSTRY

Government intervention through regulation and ownership in the telecommunications industry is not unique to the Brazilian scene. Indeed, for most of its history and in most countries, telecommunication has been provided as a user-pay service administered by the central government. In a few exceptional instances, a compromise has been struck between market competition and government ownership through the institution of regulated private utilities; franchised monopolies were created and then the firms within these monopolies were subjected to detailed regulatory scrutiny.

Both government ownership and the public utility paradigm of governmental regulation have been expressly premised on the assumption that the telecommunications industry constitutes a natural monopoly. Competition, it was believed, would duplicate investment, raise cost, inflate rates, and compromise the affordability of service to the subscriber public. Competitive rivalry was seen as being equivalent of economic waste. Technology and market structure remain neither static nor fixed, however, and institutions do not endure forever. The telecommunications industry today is undergoing massive world-wide alterations in manufacturing, investment, and market orientation. The industry is experiencing the throes of entry, rivalry, and diversity. Long regarded as the essence of a natural monopoly, telephony today is beset by competition on a multi-industry dimension.

The primary force underlying this competitive drift is technology. Advances in telecommunications technology are facilitating the transfer of larger volumes of information than ever before at faster speeds, with superior accuracy, and at rapidly declining costs. In some countries, these changes have led to the introduction of competition in the provision of telecommunications outputs and services that formerly were the exclusive domain of a single source of supply. The emerging evidence suggests that the resulting benefits are substantial: a proliferation of new products and services with exciting properties; more efficient and sophisticated means for transferring information; a more efficient use of scarce telecommunications resources; a greater variety of price options and, in general, greater responsiveness to the needs and desires of the consuming public.

The ongoing technological revolution has generated enormous pressures in many countries to modify their public policies toward the telecommunications sector. The traditional telephone systems are increasingly seen as being incapable of responding sufficiently to the informational challenge. Profound changes in the policy framework, structure, and regulation of the telecommunications sector have already been effected in many industrial nations around the world.

The pressures on the telecommunications sector in the advanced economies are increasingly felt in Brazil as well. These pressures emanate from the explicit recognition that the lack of modern state-of-the-art telecommunications services will seriously impede national economic development and increasingly handicap the ability of Brazilian enterprises to effectively compete in international markets. The infirmities of the traditional approach have become

all too apparent in recent years. Indeed, the critical issue in the present national policy deliberation is not whether the Brazilian telecommunications industry itself can make the transition from monopoly to competition. The industry will either make the adjustment or flounder. Instead, the question is how to dismantle regulation as an impediment to productivity, efficiency, innovation, and consumer choice. Oblique references to the "public interest" no longer suffice to stave off questions of regulatory malperformance and governmental failure.

As background to this policy issue, it is essential to trace the evolution of the industry's structure and the tradition of its regulatory environment. The approach that is being undertaken in this chapter is consistent with mainstream trends in industrial organization analysis--it embodies the important normative goal of trying to identify the structural and behavioral determinants of key dimensions of market performance. The analysis presented seeks to contribute valuable insights into the underpinnings of public policy toward the sector, particularly in such areas as: the adoption of prices and the supply of a set of products consistent with optimal resource allocation; the efficient supply of the industry's vector of outputs at the minimum total cost permitted by the existing technology; the promotion of competition through conduct regulation and structural relief; the creation of an industrial environment conducive to rapid technological change and innovation; and alternate forms of internal organization and governance of natural monopoly.

4.1 Market Structure

The structure of a market encompasses such elements as: the number and size distribution of sellers and buyers; the extent to which the market is dominated by a few firms; the height of barriers to entry; the degree of vertical integration, representing the extent to which firms are engaged in the different successive stages of production; the degree of diversification, reflecting the extent to which firms operate across different product lines; and the degree of physical or subjective differentiation prevailing among competing sellers' products.

4.1.1 Early History. Like many other countries in Latin America, Brazil entered the 1960s with a highly fragmented and poorly organized telecommunications network. Companhia Telephonica Brasileira (CBT), a wholly-owned subsidiary of Canadian Traction Light and Power Company, privately operated approximately 68 percent of the installed telephones in the country while the remaining capacity was divided among over 800 private entities. It is alleged that the majority of these small carriers lacked the necessary technical, managerial, and financial expertise to deliver reliable local service.[13]

The country lacked a coherent national telecommunications policy. The statutory authority to grant concessions for the provision of service was diffused among different levels of government (federal, state, and county). In view of the lack of well-defined federal, state, and local telecommunications

[13] See Hobday (1990), Ch. 5.

service distinctions, such jurisdictional separations inevitably contributed to chaotic market conditions. The telecommunications network ideally should be an integrated system. However, no overall coordinating agency was established to oversee the development of the sector and ensure the provision of inter-state services. Service obligations were ill-defined. There was almost no rural service and no reliable long-distance network. With the exception of CBT, all of the other carriers were almost certainly of suboptimal scale. The fragmented market structure precluded the exploitation of important capital-raising economies of scale and was clearly not conducive to the development of a coordinated long-run investment plan for the sector. Finally, the tariffs that prevailed at that time were unrealistic thereby further hampering the sector's development and leading to the deterioration of equipment.

The results of these structural inefficiencies were unambiguously reflected in the inadequacy of network coverage and in the quality of service. In 1962, Brazil had fewer than 1.3 million telephones serving a population of 74 million--less than two telephones per 100 population. Also, there were less than 1000 telex terminals covering the commercial and domestic needs of the entire country, and most of the lines of the national telegraph system were poor or obsolete. Poor coverage was compounded by the lack of an efficient trunk network. Only four major cities--Rio de Janeiro, Sao Paulo, Belo Horizonte, and Brazilia--were efficiently connected with a microwave system. Other inter-city connections were forced to depend on low-capacity, inefficient systems. Similarly, the country's international linkages were inadequate and based on a small number of submarine coaxial cables and some short-wave radio facilities. Overall, the domestic network did not have sufficient capacity in place to meet peak demand and experienced frequent system failures. Even the high capacity microwave links between the country's four major cities suffered from chronic congestion problems.

4.1.2 Regulatory Changes and the Establishment of an Institutional Framework in the mid 1960s. In response to the chaotic conditions that prevailed in the telecommunications industry in the early 1960s and the lack of a coordinated national plan for the sector's development, in August 1962 the Brazilian congress approved the Telecommunications Law 4117. The new Code defined general policy guidelines for the sector, outlined measures that were necessary for the integrated development of the country's telecommunications system, and initiated a policy process that led to the present regulatory and institutional framework. In that sense, it is a landmark decision in the history of development of the Brazilian telecommunications industry.

The Telecommunications Law called for a radical restructuring of all activities within the telecommunications sector: telephony, telex, telegraph, and postal. To rectify some of the ambiguities that characterized the previous jurisdictional separations, it brought all telecommunications services (both development and operation) under the statutory authority of the federal government.

The new Code mandated the creation of several specialized agencies with clearly defined responsibilities. More specifically, it called for the establishment of:

- the Conselho Nacional de Telecomun. acoes (CONTEL), which reported directly to the President of the Republi and was charged with the overall responsibility of coordinating, supervising, and regulating all activities within the sector;

Table 4.1: Regulatory and Institutional Evolution in the Telecommunications Sector, 1962 - 1981

Date	Subject Matter	Regulatory instrument
27 August 1962	Brazilian Telecommunication Law	Law No. 4117
16 September 1965	Creation of EMBRATEL	Law No. 4117
25 February 1967	Creation of the Ministry of Communications	Decree No. 200
11 June 1972	Creation of TELEBRAS	Law No. 5792
3 April 1975	EMBRATEL entrusted with data transmission and telex	Directive No. 301
15 August 1975	Industrial policy for the telecommunication sector	Directive No. 662
19 June 1978	Policy for technological development and acquisition of equipment for the telecommunication sector	Directive No. 621
29 December 1978	Regulation on the rental of private circuits for international communication	Directive No. 337
25 January 1979	Regulation on data transmission	Directive No. 109
15 March 1979	Presidential Guidelines on telecommunications	
21 May 1981	Regulation on the use of the public telephone network for data transmission	Directive No. 81
18 September 1981	Regulation on the standardization of protocols	Directive No. 172
9 November 1981	Regulation on digital switching center	Directive No. 215

Source: Transborder Data Flows and Brazil, New York: United Nations, 1983, p.28

The new Code mandated the creation of several specialized agencies with clearly defined responsibilities. More specifically, it called for the establishment of:

- the Conselho Nacional de Telecomunicacoes (CONTEL), which reported directly to the President of the Republic and was charged with the overall responsibility of coordinating, supervising, and regulating all activities within the sector;

- the Empresa Brasileira de Telecomunicacoes (EMBRATEL), an independent public corporation directly responsible for the provision of long-distance (both

domestic and international) services, as well as, telex, data transmission, and the retransmission of sound and image signals;

and

- the Fundo Nacional de Telecomunicacoes (FNT), to finance the activities of EMBRATEL through a 30 percent surcharge tax on public telecommunication services.

EMBRATEL, which was incorporated in 1965 under a 97 percent Federal Government ownership, provided interstate services through the basic telecommunications network with the support of high capacity microwave transmission systems that eventually linked all the state capitals of Brazil. This network was supplemented by smaller-scale systems (e.g., domestic satellite communication), which facilitated the extension of services to cities that were not as yet connected to the national microwave system. More specifically, EMBRATEL was empowered to implement, expand, operate, and exploit: the interstate trunk and international networks (all regional and national tandem exchanges and the international gateway exchange); the highest class TV exchange in each state; the media comprising the National Telex Network; the media comprising the National Data Communication Network; and Maritime Mobile Service Coast and Satellite Earth Stations

In 1967, CONTEL was replaced with the more powerful Ministry of Communications (MINICOM). In addition to CONTEL, MINICOM also absorbed the Post and Telegraph Department which was previously under the Ministry of Roads and Public Works. The Ministry of Communications was granted the statutory authority to plan, coordinate, and regulate all postal and telecommunication activities. It had exclusive authority over all public telecommunication services granted by the Constitution and formulated all guidelines and policies for them. The specific coordinating, supervising, and controlling responsibilities of the Ministry included: the establishment of guidelines and targets for the National Communications System; the evaluation of the operating efficiency of communication services; the promotion of research activities and personnel training to meet sectoral needs. The Ministry was also responsible for ensuring that the industry's operations and investment program were consistent with established national service targets.

MINICOM's principal mandate was to implement public policies and create the conditions necessary for a rapid expansion of the Brazilian telecommunications network to meet the demands of a growing and modernized economy. One of the first acts of the ministry was to nationalize CBT by acquiring all its equity. To finance its development program, MINICOM set up a novel self-capitalizing scheme whereby all potential customers of the network were required to subscribe to the telephone company by depositing a substantial installation fee; in return the subscribers obtained shares in the telephone company.

The institutional framework and the statutory responsibilities of the Ministry of Communications were further defined by the Presidential Guidelines of 1979. These guidelines restated the principle that the primary objective of public policy towards the telecommunications sector was the expansion and improvement of services to attain levels of quality and reliability consonant with the socio-economic development of the country.

4.1.3 The TELEBRAS System. Perhaps the single most important step towards the structural reorganization of the previously fragmented industry was undertaken in 1972 with the establishment of Telecomunicacoes Brasileiras S.A. (TELEBRAS), a joint public and private stock national holding corporation under the supervision of the Ministry of Communications (which controls the company on behalf of the Federal Government). Almost all telephone companies, federal (there were three), state (approximately 600), municipal (200), and private (90) came under the direct management supervision of TELEBRAS. At the time of its formation, TELEBRAS was among the five leading joint stock corporations in Brazil. Its starting equity capital amounted to five billion cruzeiros ($ 843 million), with the Federal Government being the majority shareholder. As of the end of 1989, there were 6.3 million shareholders. The Federal Government owned 51.8 percent of the company's total outstanding shares and 70.8 percent of the voting shares.

Table 4.2: MINISTERIO DA INFRA-ESTRUTURA

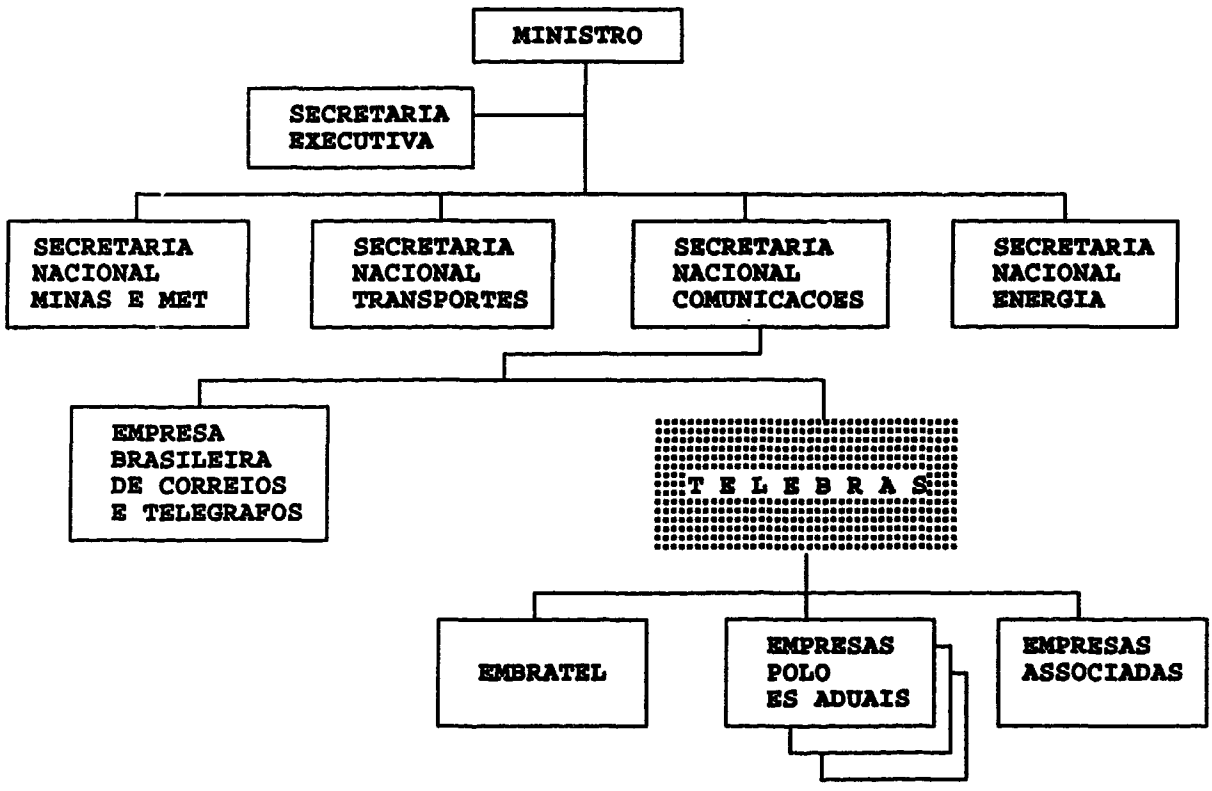

Source: "TELEBRAS Presents", Brasilia, 1990

The new holding company had the authority to regulate, standardize, plan and coordinate the operations of all Brazilian telephone companies. It was charged with the responsibility of securing the financial resources required for the expansion of the national telecommunications system, evaluating the demand for telephones, telex, and other long-distance and international connections, and with providing the country with viable, top quality, and reasonably priced telecommunications services. One of the most important actions undertaken by TELEBRAS was to consolidate the existing local companies into one large telecommunication corporation for each state. Through merger and acquisition the number of carriers was reduced from a high of 962 in 1972 to 135 in 1985, with 32 of these under the TELEBRAS corporate structure. The present TELEBRAS system is comprised of 29 companies. All of the remaining carriers account for only 2 percent of the installed telephones in the country.

The establishment of TELEBRAS in 1972 also marked the beginning of a second stage of Brazil's telecommunications development. The new objectives encompassed the digitalization of the public network, the preparation of an adequate infrastructure for telematics services, and the development of a national technological capability in the telecommunications sector.

4.2 Conduct and Performance

The regulatory change in the mid 1960s and the establishment of a coherent institutional framework provided the basis for a rapid expansion of the Brazilian telecommunications infrastructure. Following the formation of TELEBRAS in 1972 and until the early 1980s the system achieved impressive growth rates to the extent that Brazilian service, at least on long-distance trunks and in major cities served by government owned companies, became comparable to that of most European nations. Government intervention, therefore, was initially successful in establishing a business strategy that pulled together technology, politics, and economics to forge the developing world's largest telecommunications system. However, continued government intervention in the 1980s through ownership and regulation eventually proved highly detrimental to sectoral development. Like everywhere else, Brazilian policy makers were confronted with the dilemma of weighing the short-term political costs of implementing appropriate sectoral policies (especially in the areas of pricing and investment) against the long-term economic benefits that were likely to result therefrom. In Brazil, these choices became especially agonizing in view of the unstable macroeconomic conditions that prevailed in the country during that period. Furthemore, the standard internal efficiency problems that normally plague public enterprises became especially acute in the telecommunications sector due to the rapidly changing market conditions.

4.2.1 Indicators of Infrastructural Development. Although efforts to establish a coherent organizational model for telecommunications begun in the early 1960s, and a well-defined institutional framework was put in place with the creation of the Ministry of Communications in 1967, it was not until 1974 that the most dramatic reformulation of public policy took place. The incoming government committed itself to a strong interventionist policy toward telecommunications that encompassed three principal objectives: (i) to accelerate the balanced development of a reliable telecommunications infrastructure; (ii)

to develop indigenous capability in telecommunications technology; and (iii) to gain ownership and control of all multinational subsidiaries operating in the sector. The Presidential Guidelines of 1979 reaffirmed the Government's fundamental objective to ensure rapid and efficient communications for a major share of the population. These Guidelines emphasized the necessity of ensuring national technological self-sufficiency, promoting the development of products adapted specifically to Brazilian conditions, and fostering the development of a national telecommunications industry. The Gudelines envisioned that research and development activities should be geared to developing modern telecommunications technologies, so as to bridge Brazil's technological gap and, where possible, avoid intermediate steps.

The primary objective in infrastructural development was to accelerate the installation of a modern integrated telecommunications network and extend service to the country's interior. Although some improvements had been obtained under the previous government, it was generally recognized that basic services were at that time inadequate in terms of coverage and quality. The rationalization of telecommunications activities under TELEBRAS removed many of the structural impediments to sectoral development. After having acquired financial control over EMBRATEL and all the state carriers, TELEBRAS pursued a coordinated investment program and instituted policies to ensure that all new investments were based on state-of-the-art technologies.

Table 4.3: Subscriber Line Terminals, Telephones for Public Use and Localities with Service

Year	Subscriber Lines		Public Telephones	Localities with Service
	(10^6)	%Δ	(10^6)	
1972	1.42	-	10.28	-
1973	1.61	13.4	13.52	2196
1974	1.92	19.2	13.67	2554
1975	2.21	15.1	18.31	2692
1976	2.92	32.1	23.98	2917
1977	3.65	25.0	28.85	3012
1978	4.24	16.2	36.42	3112
1979	4.69	10.6	42.72	3336
1980	5.09	8.5	49.80	3773
1981	5.38	5.7	55.95	4736
1982	5.78	7.4	63.88	6119
1983	6.20	7.3	71.22	7061
1984	6.67	7.6	87.33	7995
1985	6.97	4.5	98.52	8508
1986	7.31	4.9	141.25	8815
1987	7.72	5.6	172.25	10246
1988	8.24	6.7	200.40	11908
1989	8.85	7.4	220.70	12781

Source: TELEBRAS

The historical growth of telephone coverage is detailed in Table 4.3. Following the stagnation in coverage up until the early 1970s, Brazil experienced a remarkable acceleration in the quantity of telephones installed. In 1975, Brazil had only 2.2 million of subscriber line terminals installed. By 1985, that number increased to 7.0 million. However, this expansion slowed-down considerably in the early 1980s; coverage in terminal lines expanded at an average annual rate of 17.5 percent between 1973 and 1980 and only at a rate of 6.3 percent from 1981 until 1989. According to Table 4.4, by 1990, Brazil's density of 6.0 main lines per 100 inhabitants remained well below those observed in other newly industrialized countries--Argentina had 10.7, Uruguay 12.2, Venezuela 7.6, and Korea 28.3. Indeed, Brazil has lower telephone penetration than Colombia, a substantially less modernized economy.

Table 4.4: Installed Lines per 100 Inhabitants
(1990)

COUNTRY	LINES PER 100 INHABITANTS	COUNTRY	LINES PER 100 INHABITANTS
BRAZIL	6.01	Malaysia	8.02
		Mexico	5.57
Argentina	10.65	Paraguay	2.48
Australia	46.32	Spain	30.40
Canada	55.80	Taiwan	30.60
Colombia	7.36	U.S.A. (N.Y.)	53.34
Greece	37.81	Uruguay	12.20
Korea	28.32	Venezuela	7.61

Source: SIEMENS

Until the late 1960s there was almost no rural service and many municipalities had no network coverage. In 1972, for example, only 1,175 municipalities had communications services. By 1985, all municipalities were connected to the network. According to the statistics presented in Table 4.3, the number of localities with service increased form 2,196 in 1973 to 3,773 in 1980, and further to 12,781 by 1989, indicating substantial and continued progress in the geographic expansion of coverage.

Despite the impressive geographic expansion of coverage, rural infrastructural development lagged considerably behind that in the urban areas. According to the census of 1980, the total number of terminals in the rural sector amounted to only 75,000. By 1983, this figure increased only modestly to just over 90,000--implying that only 0.9 percent of the rural households in Brazil were connected to the national network. It was estimated that by 1989, over 420,000 rural households would be ready to afford telephone service--a rural farming property is considered ready to afford service when telephone purchase costs account for less than 5 percent of its output.

While the observed slow pace of expansion of service to rural areas can be readily attributed to the unique geographic characteristics of the country, it

also reveals a broad policy failure. The original telecommunications plan and the Presidential Guidelines of 1979 called for extensive investments in poor, especially rural areas, to bridge the substantial gap in infrastructure development as between the urban and the neglected rural areas. However, as a result of the country's deepening economic crisis, restrictions were placed upon the MINICOM investment program by Secretaria de Planejamento (SEPLAN), the overall government planning authority, and substantial financial resources were diverted from the telecommunications sector to other sectors of the economy. This led to a restructuring of the telecommunications investment program and rural development was subsequently assigned the lowest level of priority.

In the face of investment constraints, the focus on the segments of the network that generated most of the revenue (namely the international and interexchange markets) was clearly appropriate in terms of economic efficiency. Nevertheless, the diversion of telecommunications revenues to other sectors of the economy exacerbated existing regional imbalances in the country's infrastructural development. The low priority assigned to rural telecommunications development posed grave problems in the long-run to the efficiency of agricultural production, an important component of the Brazilian economy. In recognition of the past failure to sufficiently address telecommunications coverage in rural areas, the Telecommunications Interiorization Program was launched in 1985. The primary goal of this program has been the expansion of service to towns and villages in remote areas of the country. Investments totalling US$ 163 million were earmarked for the period 1985 to 1989 to provide service to 60,000 rural households.

4.2.2 Investment and Pricing Policy. As was noted above, the telephone tariffs that prevailed until the mid 1960s were unrealistic and in combination with structural inefficiencies hampered the sector's development. The Presidential Guidelines of 1979 sought to establish a more rational tariff policy. The Guidelines directed that tariffs should be structured so as to cover operating costs, allow a fair return on invested capital (up to 12 percent), and supply resources for the expansion and improvement of services. In addition, the Guidelines required that the tariff structure should reflect considerations of distributional equity--tariffs should take into account certain social objectives, such as providing at reasonable rates services that are of social importance but are not necessarily profitable.

Table 4.5 details the total investment outlays of the TELEBRAS system for the period 1973 to 1989. The numbers presented should be interpreted with caution because they are very sensitive to exchange rate conversions. Still, they indicate a substantial investment program until the late 1970s. It is noteworthy, that these investment expenditures were largely financed from the system's internally generated funds and, therefore, did not represent a resource drain to the public treasury.

The publicly stated objective for creating the TELEBRAS system was to plan and coordinate nationwide telecommunications and to secure the financial resources required for the implementation and expansion of telecommunications systems. However, as early as 1975 the government (through SEPLAN) began interfering with the operations of the system by placing serious restrictions on its investment

program. The macroeconomic crisis (and the concomitant high rates of inflation, rising unemployment, and low rates of growth) that followed the two oil shocks was the primary motivating factor for these governmental restrictions. As a direct result of the mounting public debt, the telecommunications expansion plans were scaled down considerably and financial resources were increasingly diverted to other sectors of the economy. As Table 4.5 indicates, the level of investment declined from a peak of about $1.65 billion in 1976 to $0.93 billion in 1980, and $0.86 billion in 1984, and remained low through the early and mid 1980s.

Table 4.5: Investment in the TELEBRAS System in US$

	YEAR						
	'73	'74	'75	'76	'77	'78	'79
10^6	716.8	796.1	1219.5	1648.1	1565.9	1454.1	1358.0
%Δ	-	11.0	53.1	35.1	-5.0	-7.2	-6.7

	YEAR									
	'80	'81	'82	'83	'84	'85	'86	'87	'88	'89
10^6	932.3	1330.0	1523.3	947.1	863.7	918.3	1245.0	1447.7	1977.0	2586.6
%Δ	-31.4	42.6	14.5	-37.9	-8.8	6.2	35.6	15.2	36.6	30.8

Source: TELEBRAS

As was noted above, the National Telecommunications Fund (FNT) was set up in 1973 to support first the EMBRATEL and later the TELEBRAS development programs. By law, approximately 30 percent of telecommunications revenue (from telephone calls) was channelled to the FNT to support the telecommunications expansion program into the less profitable, poorer regions of the country. During the period from 1973 to 1981 FNT funds accounted for approximately 24 percent of total telecommunications investment. After 1975, a large portion of FNT funds were diverted into another fund, the National Development Fund, to finance other governmental activities--between 1975 and 1980, approximately Crs43 billion ($813 million) of telecommunications revenue was thus diverted. By 1980, the proportion of diverted FNT funds reached 50 percent. Since 1980, the percentage of the fund that was actually used for its original telecommunications purposes declined still further. In 1983, for example, of the Crs225 billion (approximately $424 million) telecommunications revenue received by the fund, only Crs75 billion ($141 million), or 33 percent of total receipts, were used for telecommunications investment. In 1984, only 10 percent of the FNT receipts were planned to be reinvested in the telecommunications sector.

The Evolution and Structure of Tariffs. The government also sought to use the telecommunications industry as an instrument of stabilization through price controls. Almost during the entire period since the late 1970s, telecommunications tariffs were restricted to remain well below the average rate of inflation. These pricing restrictions resulted in a substantial transfer of resources from telecommunications to other sectors of the economy. During the period from 1973 to 1983, the basic telephone access charge increased 25-fold, and the average price of inter-urban calls increased 35-fold (using January 1983 as a base of 100). During the same period, the retail price index experienced an 89-fold increase, industrial electricity prices a 120-fold increase, and the minimum wage an 87-fold increase.

Table 4.6: Basic Telephone Tariffs
(December 1977=100)

YEAR	ACCESS CHARGE	LOCAL PULSE	PUBLIC PHONE TOKEN	LONG-DISTANCE (1 minute)	INSTAL-LATION CHARGE	PRODUC-TIVITY INDEX	ACCESS CHARGE ADJUSTED FOR PRODUCTIVITY GAINS
1978	81.71	82.16	85.20	81.65	94.04	105.39	86.05
1979	65.12	68.68	64.11	73.72	79.24	110.55	75.95
1980	49.62	58.27	47.65	60.84	93.97	114.65	59.99
1981	48.25	70.31	48.83	59.08	103.03	116.00	59.01
1982	46.57	67.90	48.90	57.05	100.56	119.39	58.66
1983	34.06	49.64	34.59	41.72	81.20	120.12	43.16
1984	29.97	43.70	30.59	36.72	80.21	122.13	38.62
1985	32.12	46.82	29.93	39.34	77.25	128.22	33.90
1986	33.96	49.64	37.33	41.60	224.33	133.42	37.30
1987	28.35	45.78	33.63	38.27	142.89	146.10	36.89
1988	23.38	37.59	24.88	37.36	132.70	153.18	38.94
1989	15.39	30.79	20.52	18.33	130.55	-	-
1990	17.47	36.63	25.31	21.77	362.40	-	-

Source: TELEBRAS and Financiamento e Investimento das Empresas Estatais Avaliacao e Perspectivas, Cintia Costa Neves, Coordenadora

Table 4.6 details the evolution over time of the various basic telephone tariffs, adjusted for inflation, from 1978 to 1990 (using December 1977 as a base of 100). These estimates reveal quite clearly the magnitude of the pricing

restrictions imposed by the government on the telecommunications sector. At the end of 1990, the basic monthly access tariff was in real terms less than 18 percent of its level in 1977. The indicated tariff erosion remains dramatic even after gains due to technical change are taken into account; the productivity-adjusted basic access tariff in 1988 was, in real terms, below 36 percent of its level in 1977.

The experience with the Brazilian telecommunications tariffs during the 1980s exemplifies the difficulty of placing an effective buffer between public enterprises and central governments, especially during periods of economic difficulty and budgetary restraint. It also highlights the fact that government's use of public enterprises as instruments of stabilization policy frequently lacks a rational basis. Only local access charges and the price of public tokens are included in the cost-of-living index, currently comprising approximately 0.24 percent of its value (the local access charge representing 0.19 percent and public tokens 0.05 percent). Thus, all arguments related to the impact of cost-based telecommunications pricing policy on the computed rate of inflation are simply not tenable. On the other hand, there might have been proper concerns about the demonstration effects of telecommunications tariff adjustments. However, as was noted above, other public sectors have not suffered nearly as much tariff erosion during the same period. This systematic policy of enforcing strict price controls in the telecommunications industry to counter alleged inflationary propensities has been applied in almost total disregard of the sector's central infrastructural role.

In addition to restricting the adjustments of the average price of service below the general level of inflation, Brazil's pricing policy has created significant distortions within the tariff structure itself. Complex multipart telephone tariff structures have been routinely authorized in many countries not only to reconcile marginal cost pricing with full cost recovery under natural monopoly, but also to subsidize certain classes of customers. However, the Brazilian tariff structure seems to be at a significant variance with the pricing policies adopted by other nations. The present pricing policies maintain an unrealistic, inequitable and inefficient regime in which certain groups of consumers are being subsidized in ways unrelated to rational social goals.

Table 4.7: Installation Fee for a Main Residential Station in US$ (1988)

COUNTRY	INSTALLATION FEE	COUNTRY	INSTALLATION FEE
BRAZIL	1500	Korea	13
		Mexico	252
Argentina	182	Paraguay	649
Australia	157	Spain	107
Canada	31	U.S.A. (N.Y.)	136
Colombia	228	Uruguay	229
Greece	228	Venezuela	36

Source: TELEBRAS and SIEMENS

Pricing policy in Brazil has relied on access rather than usage fees to ration demand. The imposition of an extremely high installation charge--as Table 4.7 indicates, by far the highest in the region and one of the highest in the world--as a device of rationing demand for lines has not been effective because demand for basic access to the network is highly inelastic. Despite the high access fee (approximately $1,500 for residential and $2,500 for business subscribers), there is still considerable excess demand as evidenced by the active secondary market for telephone lines. This pricing policy is puzzling in view of the claim that Brazil has pursued social rather than cost-based telephone tariffs. Given the country's incompletely developed capital markets for personal loans, the imposition of such a high installation fee has clearly served to preclude low income households from obtaining telephone service, even if they could afford the equivalent monthly amortization.

Table 4.8: Prices of Basic Telecommunications Services
Residential - Large Cities
In US$

COUNTRY	BASIC MONTHLY TARIFF	LOCAL SERVICES 150 MINUTES	LONG DISTANCE 100 - 300 Km
BRAZIL	0.061	0.019	0.19
Chile	5.58	0.044	0.43
Colombia	4.17	0.01	0.08
Indonesia	2.08	0.04	1.35
Mexico	4.42	0.23	0.27
South Africa	6.52	0.07	0.30
South Korea	4.63	0.04	1.43

Source: SIEMENS and TELEBRAS

For the existing network subscribers, ordinary telephone services are substantially underpriced. Residential access costs approximately one dollar a month, and entitles the user to 45 three-minute calls per month. Beyond this, additional connections are priced at three cents, with a three-cent additional charge after each four minutes for a single call. Likewise, domestic long distance calls are priced at about twenty cents. As Tables 4.8 and 4.9 indicate, Brazil is a unique case in which all rates for basic domestic telephone services are extremely low. By contrast, international long-distance calls are relatively expensive in Brazil compared to other countries, priced at the official international accounting rate. This higher cost could explain the relatively low portion of revenues represented by international long-distance calls--12 percent in Brazil versus 25 percent in Mexico.

The prevailing tarrif structure is both inefficient and inequitable. Like in many other countries, these inefficient pricing practices are the consequence and instrument of a complex network of cross-subsidies. However, it is the extent to which the present pricing structure deviates from efficiency (i.e., the magnitude of the various gaps between marginal cost and price and how responsive

the various demands are to price at those levels) that is problematic in the case of Brazil. In addition, given the economic characteristics of the existing subscribers to the Brazilian telephone network, it would be difficult to justify the observed substantial departures from cost-based pricing (and the concomitant cross-subsidies) on equity grounds.

The systematic overcharging for international long-distance calling (which is the telephone service with the most elastic demand and where the gap between price and marginal cost is the most egregious) is likely to lead to a significant loss in total welfare. Since businesses, especially those engaged in import and export oriented activities, do a disproportionately large amount of international long-distance calling, they effectively subsidize residential subsribers whose ordinary telephone services (access and usage) are substantially underpriced. However, businesses generally tend to pass their costs to consumers in the form of higher prices. This means that residential telephone service is being subsidized by a kind of a sales tax on all the purchases of goods and services produced by businesses that are overcharged for their telephone service. It would be difficult to argue on equity grounds that residential customers who can afford the high installation fee are worthy of such a subsidy which effectively comes from a general sales tax.

Table 4.9: Basic annual Subscription in US$*
(1988)

COUNTRY	BASIC ANNUAL SUBSCRIPTION	COUNTRY	BASIC ANNUAL SUBSCRIPTION
BRAZIL	37	Mexico	243
		Paraguay	179
Argentina	209	Portugal	295
Canada	474	Spain	293
Colombia	141	U.S.A. (N.Y.)	534
India	256	Uruguay	147
Korea	161	Venezuela	70

Source: SIEMENS and TELEBRAS
* For a fictitious "call basket" that includes one-tenth of the fixed nonreturnable installation fee, the basic access fee, and an arbitrary number of local and domestic long-distance calls.

In the last few years, there has been a significant deterioration (see below) in the quality of telephone service, primarily due to congestion. Consequently, an equally serious problem with the present tariff structure is that, in essence, the wrong price--installation--has been increasing over time (Table 4.6). Demand for basic access to the network--a working telephone in a business or residence--is highly price inelastic. Given the country's low telephone penetration, even extremely high installation charges have not suppressed the growth in demand for lines. In addition, even these high installation charges have been below the average cost of providing new lines. Hence their effect has been to strain further the investment budget of the sector. Every new customer requires more in investments and other costs than the revenue generated; hence, every customer adds to, rather than subtracts from, the service quality problem.

By contrast, usage demand is more elastic with repsect to price. An increase in usage charges (local and long-distance) would, therefore, reduce the number and duration of telephone calls, thereby alleviating the quality problem.

4.2.3 Quality of Service. The decline in sectoral investment during the 1980s was taking place in the face of a substantial increase in the demand for telecommunications services. Undoubtedly the underpricing of basic telephone services contributed significantly to excess demand. However, the observed increase in demand was also the natural outcome of the modernization of the demestic economy--in part reflecting the increased use of financial services and of communications among modern, specialized firms, and in part it reflected a final consumption demand arising from higher incomes. As Table 4.10 indicates, during the period from 1979 to 1989 local and domestic long-distance traffic experienced average annual growth rates of 11.6 and 17.6 percent respectively, while international traffic grew, on average, at 22.0 percent per annum. Also, between 1980 and 1989, the number of pulses per installed terminal rose by 45 percent, the number of domestic long-distance calls by 108 percent, and the number of international calls by 137 percent.

Table 4.10: Telephone Traffic.

YEAR	LOCAL TRAFFIC PULSES (10^9)	LONG DISTANCE CALLS (10^6)	CONNECTED OUTGOING INTERNATIONAL CALLS (10^6)	PULSES PER TERMINAL INSTALLED (10^3)	LONG DISTANCE CALLS PER TERMINALS	DOMESTIC TELEX TRAFFIC (10^6 minute)
1972	2.8	124	-	1.97	87.1	-
1973	3.1	147	-	1.94	91.4	-
1974	4.1	177	1.0	2.13	92.2	-
1975	4.5	248	1.3	2.05	112.0	48.1
1976	5.6	285	1.8	1.93	97.5	70.2
1977	7.7	351	2.4	2.11	96.3	89.8
1978	10.5	400	3.2	2.47	94.5	69.7
1979	13.4	520	4.5	2.83	110.9	126.4
1980	16.0	630	5.6	3.14	123.7	161.8
1981	18.6	708	6.3	3.46	131.5	193.5
1982	21.5	842	6.9	3.73	145.7	247.7
1983	23.8	937	7.5	3.85	151.1	304.5
1984	26.3	1,069	8.2	3.95	160.2	376.6
1985	29.6	1,299	10.4	4.24	186.4	397.0
1986	32.2	1,623	13.1	4.44	221.9	400.2
1987	34.4	1,801	15.8	4.45	233.3	457.1
1988	36.8	1,986	19.9	4.48	240.9	543.2
1989	40.0	2,364	27.7	4.54	257.9	618.4
1990	42.0	2,499	35.5	4.51	268.5	715.2
1991	46.6	2,949	37.2	4.76	322.1	629.8

Source: TELEBRAS

The decline and lack of coordination in sectoral investment coupled with the substantial growth in demand led to a significant deterioration in the quality of service. The allocation of investment funds among the various components of the system has been unbalanced. Especially in the last few years, a large portion of TELEBRAS' investment has been earmarked for EMBRATEL to the detriment

of the local operating companies. This strategy has proven to be somewhat misguided, in that, EMBRATEL is now equipped to offer state of the art services, while the local companies lack the equipment to implement them.

Table 4.11: Quality Indicators

	YEAR							
	'75	'76	'77	'78	'79	'80	'81	'82
Repair Request Rate (per 100 terminals)	13.6	12.4	10.8	9.1	7.9	7.3	6.1	5.7
Rate of Repair Service	76	76	81	85	89	90	85	87
Probability of Receiving a Dial Tone	82	81	93	95	97	98	99	99
Call Completion Rate (Long-Distance Calls)	-	32	35	36	42	47	81	52
Call Completion Rate (Local Calls)	-	-	-	-	-	54	55	56

	YEAR								
	'83	'84	'85	'86	'87	'88	'89	'90	'91
Repair Request Rate (per 100 terminals)	5.6	5.4	5.0	5.0	5.3	5.5	5.2	4.7	4.5
Rate of Repair Service	83	89	89	85	76	80	83	84	86
Probability of Receiving a Dial Tone	99	99	98	95	88	87	84	88	91
Call Completion Rate (Long-Distance Calls)	54	55	54	49	43	42	39	41	43
Call Completion Rate (Local Calls)	58	58	57	58					

Source: TELEBRAS

Table 4.11 details the time evolution of several standard indicators of service quality. The probability of receiving a dial tone fell from 99 percent in 1984 to 84 percent in 1989. Call completion rates averaged 58 percent for local calls in 1986, compared to 80 percent for well-dimensioned networks. For the local operating company of Sao Paulo, TELESP, long-distance call completion rates currently average 44 percent compared to an international average of 60 percent (70 percent for well-dimensioned networks). The statistics presented

percent (70 percent for well-dimensioned networks). The statistics presented indicate that the repair request rate (per 100 terminals) has declined over time. However, the present system-wide average rate remains above the international norm of 4 percent. For TELESP, the repair request rate has actually declined to the international norm, and the percentage of terminals serviced within 24 hours compares favorably with the international parameter (93 versus 95). However, TELESP currently faces a plant congestion rate of 24 percent compared to an international average of 5 percent. The quality indicators for TELESP demonstrate efficiency with respect to plant installation and maintenance (favorable repair request and service rates) and deficiency in plant size (unfavorable plant congestion and successful call completion rates).

The low quality of service is likely to have suppressed demand and will inevitably lead to a greater incidence of noneconomic bypass. Because of the low dial tone rates and low call completion rates, business users, especially, are likely to be relying more heavily on other means of communications than they would if service were better. A case in point is the extensive penetration, use and even recent growth of Telex in Brazil. Throughout the world Telex is a dying service. Fascimile transmission, electronic mail, and voice mail have made Telex the contemporary version of the stagecoach. Brazil stands as an anomaly in the continued popularity of this service, which is no doubt due to the unreliability or unavailability of superior substitutes.

The low quality of service is likely to have suppressed demand and will inevitably lead to a greater incidence of noneconomic bypass. Because of the low dial tone rates and low call completion rates, business users, especially, are likely to be relying more heavily on other means of communications than they would if service were better. A case in point is the extensive penetration, use and even recent growth of telex in Brazil. Throughout the world telex is a dying service. Fascimile transmission, electronic mail, and voice mail have made telex the contemporary version of the stagecoach. Brazil stands as an anomaly in the continued popularity of this service, which is no doubt due to the unreliability or unavailability of superior substitutes.

Table 4.12: The Quality-of-Service Parameters of TELESP (1990)

	INTERNATIONAL PARAMETER	TELESP
Repair Request Rate (per 1000 telephones)	4 %	4 %
Serviced Within Less Than 24 Hours	95 %	93 %
Completion Ratio-Non-Local Calls	60 %	44 %
Plant Congestion Rate	5 %	24 %

Source: Gartra, Report 22/91

4.3 The Financial Situation of the TELEBRAS System

The financial performance of the TELEBRAS Group since its inception in 1972 has been one of the strongest of all Brazilian state-owned companies--Annex I presents TELEBRAS' financial performance statistics. Even during the period of macroeconomic difficulties of the 1980s, gross revenues of about US$3.3 billion, and net profits of US$580 million (average, 1986-1989) made TELEBRAS second only to PETROBRAS, the national oil company, in size and profitability.

With a market capitalization of approximately $2.9 billion, TELEBRAS is currently being valued at less than one-sixth of TELMEX's $15 billion valuation, and only slightly more than that of Compania de Telefonos de Chile, with a market capitalization of $2.2 billion. Governmental restrictions upon the structure and conduct of TELEBRAS are largely responsible for this relatively low valuation.

As was noted above, the sector is currently plagued by large unmet demand, severe congestion, particularly in key urban areas, and poor service quality. All of these have a strong adverse impact on both domestic and international commercial activity and productivity. Evidence suggests that both macroeconomic policies imposed on the company by its major shareholder, the Federal Government of Brazil, and microeconomic decisions at the firm level which stem from the specific mandate given the firm by its major shareholder have led to sub-optimal performance. In other words, while TELEBRAS has been initially successful in developing the sector and enjoys comparatively robust financial health currently, its financial performance during much of the 1980s has not been nearly as healthy as it could have been, and its access to financial resources has been severely constrained. These factors, in turn have affected the company's ability to invest in efficient expansion of the system. It is arguable that the current problems of large unmet demand, severe congestion and poor service quality could have been minimized (possibly not avoided, however, due to the severity of the macroeconomic crisis) with a different choice of policies and greater independence of the operating firms.

4.3.1 Operational Efficiency. Brazil's institutional and regulatory framework has provided very weak incentives for efficient operation of the telecommunications infrastructure. In the face of tight budgetary constraints, the government used the telecommunications sector to advance political and social goals that had no direct relation to the sector's main function. This entailed: diversion of investment and procurement to particular localities and to specific firms; subsidies to designated users and localities; employment decisions on a political basis; creation of employment conditions and industrial relations which were judged desirable by the government, but placed the telecommunications entities at a disadvantage relative to the private sector. Some of the factors that continue to constrain the operational efficiency of the telecommunications entities are:

i. **Financial Regulation.** The revenue-sharing arrangements in the sector provide no incentives for cost-control, but rather assure an income averaging for all companies in the system. Further, it is not clear that rate-of-return regulation is the appropriate method of control in a highly inflationary environment (especially when assets are not valued on the basis of their replacement cost, but rather are adjusted on the basis of

indexes that often do not adequately compensate inflation). Thus, not only should the structure and level of tariffs be reviewed but also the means of regulating returns, in order to encourage efficiency.

ii. **Cost-Accounting and Control.** The sector does not have an adequate cost-accounting system. Accounts are kept by nature of expense. Thus, management lacks accurate information regarding the profitability of the various services offered, whether at the operating company or holding company level.

iii. **Personnel Policies.** Personnel expense is one of the largest contributors to total operating costs. However, the hiring and firing of staff is not entirely under the control of company managers. In addition, because employment decisions are largely made on political grounds, management has been unable to achieve an optimal mix of skills. Therefore, overall levels of personnel have been higher than industry standard, and while there are excess staff in many areas, there are deficits in others, in particular engineering and planning.

As of April 1991, TELEBRAS had a total of 92,000 employees, down from 98,000 in 1989. In addition, management planned to reduce employment by 5 to 10 percent in 1991. As Table 4.13 indicates, TELEBRAS has succeeded in reducing the number of employees per 1,000 installed lines from 18 in 1980 to 10.5 in 1991. However, it is still inefficient when compared to other international telephone companies. Telefonos de Mexicos (TELMEX) currently operates with 9.6 employees per 1000 access lines, Compania de Telefonos de Chile with 8.3, and the U.S. average is 5.1.

Table 4.13: Employees Per 1000 Installed Main Lines.

YEAR																			
'72	'73	'74	'75	'76	'77	'78	'79	'80	'81	'82	'83	'84	'85	'86	'87	'88	'89	'90	'91
-	35	34	31	27	22	21	19	18	17	16	15	14	14	13	13	11.7	11.1	10.9	10.5

Source: TELEBRAS

Table 4.14: Efficiency Indicators - International Comparison (1990)

	Revenues Per Employee (US$)	Revenues Per Lines (US$)	Lines Per Employee	Employee Per 10,000 Lines	Return on Capital Employed
TELEBRAS	42,657	420	102	109	19.1%
TELMEX	73,667	782	104	96	12.8%
Telefonos de Chile	55,671	466	122	83	13.1%
U.S. Average	140,380	718	198	51	13.2%
British Telecom	99,454	885	112	89	23.1%
Telecom New Zealand	95,705	963	118	84	16.6%

Source: Goldman Sachs

Table 4.14 compares the standard management efficiency indicators of TELEBRAS with other international telecommunications entities. The gross domestic product per capita in Brazil is close to $3,000, compared with $2,597 in Mexico and $2,200 in Chile. Yet annual revenue per access line in Brazil is below those observed in Mexico and Chile, and is dramatically below international levels. Also, revenue per employee is dramatically below international levels. Given that basic telephone services (that are generally more labor intensive) are substantially underpriced, there is scope for significant improvement in these indicators even through modest rebalancing of the structure of tariffs.

4.3.2 Constraints on Investment Efficiency. During the 1980s, the conflict between the government's short-term budgetary concerns and the sector's need for long-term financial planning, consistent with the high capital intensity of its operations, became most acute. Since the telecommunications industry is relatively profitable, the government used it as a means of indirect taxation. Also, government induced constraints on investment and managerial discretion inhibited the establishment of stable and reasonable criteria for TELEBRAS' financial structure (debt-equity ratios, composition of financial liability) and financial policy (divident rates). During the same period, a combination of lack of sources of financing, both debt and equity, which during the 1970s had been plentiful, and increasing input costs due to mandatory use of domestically manufactured telecommunications equipment led to higher network costs.

Lack of Long-Term Financing. While TELEBRAS made effective use of long-term borrowing during the 1970s and early 1980s to undertake a significant portion of its annual investments, during the decade of the 1980s this source of funding decreased dramatically. As a result of the country's debt crisis, international credit gradually dried up. TELEBRAS' last long-term foreign-currency loan was 1982. In addition, the government in its effort to limit public sector debt, placed strict limits on the annual borrowing of public enterprises (Resolution #1469 of 1987 and later #1718 of 1990). Moreover, the lack of domestic long-term debt instruments (longest maturity 30-60 days during much of the 1980s), necessitated increased reliance on short-term debt at very high real rates of interest (see Table 4.15).

Table 4.15: Selected Indicators of Historical Financial Performance

	'80	'81	'82	'83	'84	'85	'86	'87	'88
Debt/Equity	122.4	80.3	64.4	69.7	55.0	45.4	35.6	31.3	36.9
Short-Term Debt / Total debt	26.8	29.7	27.0	27.1	31.5	40.2	43.7	50.7	71.5
Operating Income / Revenue	13.6	14.9	14.7	14.9	17.6	15.0	5.4	6.9	15.9

Source: Financiamento e Investimento das Empresas Estatais: Avaliacao e Perspectivas

Procurement Policy and Network Costs. In 1978, Brazil adopted the following policy regarding telecommunications equipment:

. The domestic manufacture of material and equipment needed by the National Telecommunications System by companies controlled by Brazilian Capital.

. Maximizing the index of Brazilian-made products.

. Development in Brazil of product technology necessary for the National Telecommunications System.

The procurement policies of TELEBRAS have, therefore, been based in large part on a system of market reserve. By the mid-1980s, the effect of this policy had been to eliminate entirely imported telecommunications equipment. While the reserve for most products has beed recently terminated, the relationships with these suppliers continue, as does the explicit instruction in TELEBRAS' statutes to promote the domestic manufacturing industry.

The consequences of the policy to prevent telecommunications from being a drain on foreign exchange is that telecommunications equipment prices have been substantially higher in Brazil than elsewhere (e.g., the Tropico switch costs $1,000 per line compared to $150-200 for modern digital switches in the U.S.). This is manifest in the extremely high costs of incremental investment in the Brazilian telephone system. The average investment per line exceeds $4,000, and the marginal cost of an access line in major urban centers is approximately $2,500. The comparable numbers are approximately $2,000 and $1,200, respectively, for countries that either contain advanced manufacturing industries or engage in relatively free trade in equipment.

4.4 Recent Legal and Regulatory Changes

A presidential decree in 1990 directed that private entry be permitted into the telecommunications sector, subject to legal limits established by the 1988 Constitution. Further Constitutional reform is expected in 1992. The proposed draft regulations will be "interim" until the new Constitutional powers are in place. Annex II details all recent legal and regulatory changes in the sector.

The 1962 statute required that public telecommunications services between states ("interstate service") be offered by EMBRATEL. Other companies were permitted to provide all other telecommunications services. This regime changed in 1988 when the new Constitution required that all "public telecommunications services" be provided by state-owned companies. At the same time, the public switched network was opened to third party users and suppliers of "information services". The National Executive, two months before the 1988 Constitution was adopted, came up with a "Public Services" and "Limited Services" distinction to identify TELEBRAS services which had to be available to all users via the public network and those which could be made available only to specific users through dedicated facilities.

The Secretariat of Communications has interpreted the Constitution to permit the following six types of telecommunications services:

1. "Public telecommunications services" may be offered only by TELEBRAS subsidiaries on the public switched network.

2. "Public restricted telecommunications" are local telephone services offered by private companies licensed to provide those services until the public telephone company is able to provide the service.

3. "Broadcasting services" are to be provided by private entities.

4. "Limited services" are services made available to a limited class of users which are provided through TELEBRAS facilities on a dedicated basis.[14]

5. "Special services" refer to services that are not part of "public telecommunications services", but are offered to any interested user by TELEBRAS.

6. "Information services" are value added, point to multipoint data base services. They do not offer real time inter-customer connection and do not offer packet switching. They use the public switched network on a value added basis.

4.4.1 The Interim Regulation of "Limited Services". The current effort is limited in scope. It is not attempting to define the ultimate role for competition in the Brazilian telecommunications sector. It may have this consequence, but it is not so intended. The Brazilian authorities are attempting to build on the conceptual base distinction between "Public Services" and "Limited Services" to stay within the Constitutional requirement that TELEBRAS offers all "public telecommunications services" while permitting entry into "Limited Telecommunications Services".[15]

The Secretariat sees the "public services" versus "limited services" distinction as an opportunity for partial liberalization. The goal is to license new applicants for "limited service" provided they serve only a "closed group" with a "common activity and interest". This approach creates an obvious set of questions which have to be resolved: How to control, if at all, the scope and operation of the new licensees? What conditions should attach to their use of the public network? Should they be permitted to construct parallel networks to the public network? What terms and conditions should apply to the interconnection between the public and parallel networks? What protections are necessary for TELEBRAS to continue expansion and development of the public switched network?

---

[14]This concept of a limited class of users is not normally found in other countries' regulatory structures. It is these "limited services" that the Secretariat is interpreting as open to broader entry.

[15]The Government has taken the view that the Constitution only requires licensing of "telecommunications services", defined as the exploration of telecommunications between stations. "Stations" mean the geographical scope of a single real estate parcel. The practical consequence of this has been to permit the unlicensed development of private telecommunications systems within wholly-owned real property units. For example, a high-rise office building owned by a multi-national corporation may have an extensive and complete telecommunications system that is not licensed, provided it is not interconnected to the public switched network. However, if an entity wanted to connect two separate, commonly owned high-rise office buildings, it would have to have a license because it would then be providing a "telecommunications service".

Beyond this interim change, the government anticipates a 1993 revision of the Constitution and its limits on private sector offerings of telecommunications services. It may be possible then to address the issues of private ownership of part, or all of the shares of TELEBRAS; elimination of political intrusion on TELEBRAS' tariffing policies; private investment incentives; and broader competitive entry into telecommunications services.

Summary of the Regulation for Telecommunications Limited Service. The regulation is a hybrid of the European and North American experience. The Brazilians are choosing to control the scope of competition by tightly regulating the licensing and provision of private network hardware and its interconnection with the public switched network. Privately owned networks may offer services in parallel with the public switched network, with several significant restrictions. Any Brazilian entity (less than 50% foreign-owned) may receive a license to offer "limited services." Pursuant to this license, transmission facilities "between two or more stations" may be built, or leased on a dedicated basis from TELEBRAS. On the other hand, a private network cannot itself lease private lines to any third party. In leasing private lines from TELEBRAS, the "limited services" licensee cannot engage in "technological gain," which is defined as any activity which would enhance the capacity of the circuits. This is intended to prevent arbitrage and resale. The new network may only be interconnected to the public switched network at a single point (to prevent bypass). Multiple Limited Services networks can be interconnected themselves, but together they may only have one point of interconnection to the public switched network. Information service networks, i.e., data base services, can be offered to the general public beyond a "well defined group." However, an information service licensee can only operate on a point-to-multipoint basis and cannot interconnect any two users of the data base on a real time basis (e.g., store and forward is permitted, but packet switching is not). Finally, no international private system may be interconnected with the public switched network. Domestic satellite systems can be used as part of "limited services" networks, provided the one point of interconnection rule is not violated. This entire system of licensing and restrictions on uses of facilities is enforced through a series of severe fines, forfeitures, and license cancellations.

Likely Effectiveness of Regulation. The proposed regulatory system is probably unsustainable over the long term because it places too much reliance on licensing and restrictive terms and conditions for operating very sophisticated hardware and not enough reliance on prices. A more serious near term issue is the unlimited discretion placed in the Secretariat with respect to how to define "user group" and "technological gain." These concepts are central to who can get a license and, unless implemented on the basis of highly transparent criteria, could result in anything from a very liberal to a very restrictive entry policy. The regulation contains no guidance on interpretation and, therefore, gives very little predictability. (For example, it is not at all evident whether private, parallel networks' voice switching would be permitted.) This uncertainty will discourage significant private sector investment.

It is going to be difficult to police the interconnection rules because there are so many capabilities in current technology with respect to "smart" switches. It is hard to imagine that the Brazilian authorities will be able to police effectively the "one interconnection" limitation or the prohibition on private

systems, when they connect together, to have more than one interconnection to the public network. More important than license restrictions is pricing rationality. The demand for service will follow price signals. The bypass risk continues as long as TELEBRAS is sending incorrect price signals.

The regulation is a good first step because it creates some ability within the Secretariat to move toward a more liberalized environment. However, the government needs to focus quickly on better pricing signals and creating more certainty for potential investors as to what will and will not be permitted. For the long term, the Secretariat should move away from trying to distinguish between uses and users and move toward treating all uses of the public network the same, regardless of who originates the traffic or its content. Over time, technology will permit TELEBRAS to better measure the source and amount of traffic. But the company will have less ability to determine the nature and content of that traffic. Primary effort should be on developing reasonable "access" tariffs that will recover the true cost of using the public switched network plus a reasonable social return. Currently, there is little evidence that the economies of scale of the public switched network are dissipating. If properly operated, maintained and priced, it is unlikely competitive facilities will gain much traffic. But licensing prohibitions, as opposed to price signals, will be much less effective at preserving the financial integrity of the public switched network.

4.4.2 Regulation of Satellite Communications Services. The removal of most statutory restrictions in the provision of satellite telecommunications services represents an important step toward a more liberal policy regime. The Brazilian authorities assess that the new rules governing the provision of space segment capacity and satellite telecommunications service are effectively creating an "open skies" policy for Brazil.

The attraction of private (both domestic and foreign) investment in the building, launching, and commercialization of satellites was one of the motivating factors for these liberalization measures. There is a potentially significant demand for satellite services from such users as banks, cable television operators, and large corporations. The impact of these measures, however, is likely to be limited by the one-point-of-interconnection rules governing the provision of limited services and the prohibitions against resale.

4.4.3 Local Telephone Networks. The measures permitting the construction of local networks by groups of private parties (e.g. private condominiums) are very important in view of the sector's acute need for investment to finance network expansion.

ANNEX I

BRAZIL
TELEBRAS, SA
Financial Statements and Income Statement
(in US$ million)

	1986	1987	1988	1989	1990	1991	1992
GROSS REVENUES	2,478.6	3,122.7	3,292.8	4,188.3	5,591.1	4,184.4	4,602.9
TAXES	(418.6)	(537.2)	(500.1)	(548.0)	(784.4)	(703.6)	(782.5)
NET REVENUES	2,060.0	2,585.5	2,792.7	3,640.3	4,806.7	3,480.8	3,820.4
OPERATING EXPENSES	(1,080.2)	(1,423.8)	(1,101.4)	(1,570.3)	(2,838.6)	(1,910.4)	(2,203.8)
Cost of Service	(404.8)	(603.6)	(684.1)	(800.3)	(790.3)	(441.2)	(690.4)
Commercial	(141.5)	(179.9)	(210.1)	(301.0)	(274.8)	(223.5)	(230.2)
General and Administrative	(508.2)	(625.4)	(625.5)	(929.5)	(981.1)	(737.8)	(759.9)
Social Contribution	0.0	0.0	(58.8)	(59.6)	(99.7)	(14.2)	(14.6)
Gain/(Loss) on Investment	(0.5)	(2.1)	16.6	22.4	78.9	1.3	1.3
Net Other Income/(Expense)	(25.2)	(12.8)	(38.7)	497.7	(754.1)	(283.0)	(291.5)
Monetary Gain/(Loss)	0.0	0.0	499.3	0.0	(17.5)	(212.2)	(218.5)
DEPRECIATION	(795.4)	(913.5)	(763.4)	(799.1)	(902.3)	(1,823.9)	(947.4)
OPERATING INCOME	184.3	248.3	927.9	1,270.9	1,065.8	(253.6)	669.2
NET FINANCIAL INCOME/(EXPENSE)	(74.3)	(70.0)	(175.7)	(349.6)	202.2	(219.1)	(225.6)
NET NON-OPERATING INCOME/(EXPENSE)	81.3	212.4	231.1	(68.3)	693.1	241.0	250.0
EFFECTS OF INFLATION	276.8	570.0	0.0	0.0	0.0	0.0	0.0
INCOME BEFORE TAX & OTHER CHARGES	468.2	960.7	983.3	853.0	1,961.1	(231.6)	693.5
Provision for Income Tax	(20.4)	(42.7)	(276.1)	(277.3)	(790.6)	47.2	32.0
Employee Profit Sharing	(2.5)	(1.8)	(0.2)	(1.0)	(3.9)	(0.7)	(1.4)
Minority Interest	(71.2)	(145.1)	(63.3)	(52.2)	(219.2)	29.8	(55.5)
NET INCOME	374.2	771.1	643.7	522.5	947.4	(155.3)	668.7
Ratios:							
Earnings Per Share of Paid-In Capital	0.01	0.02	0.02	0.01	0.01	(0.00)	0.0
Operating Ratio	1.11	1.14	0.91	0.87	0.94	1.20	1.01
Working Ratio	0.72	0.78	0.64	0.65	0.75	0.68	0.76

Source: TELEBRAS audited Financial Statements.
Note: 1992 statements estimated as of June, 1992 data.

BRAZIL
TELEBRAS, SA
Financial Statements
Sources & Uses of Funds
(in US$ million)

	1986	1987	1988	1989	1990	1991	1992
SOURCES OF FUNDS	**1,553.1**	**1,572.8**	**1,354.5**	**4,271.1**	**3,184.8**	**3,868.5**	**4,813.2**
Funds from Operations	**917.9**	**752.8**	**1,132.7**	**3,300.1**	**1,391.9**	**2,169.6**	**3,063.3**
Net Income	**374.2**	**771.1**	**643.7**	**522.5**	**947.4**	**(155.3)**	**668.7**
Plus: Non-Cash Items	**543.7**	**(18.3)**	**489.1**	**2,777.6**	**444.5**	**2,324.9**	**2,394.7**
Minority Interest	71.2	145.1	63.3	522.6	219.2	(29.8)	(30.7)
Gain from Sub. Investments	0.0	0.0	0.0	0.0	(90.4)	(35.9)	(36.9)
Net financial (revenues)/expenses	1.5	(24.6)	(145.8)	52.2	(274.2)	165.5	170.4
Monetary Correction Accounts	(388.9)	(1,088.9)	(389.6)	1,112.0	7.1	94.6	97.4
Depreciation and Amortization	795.4	913.5	763.4	799.1	902.3	1,823.9	1,878.7
Participation of Large Customers	0.0	0.0	0.0	0.0	(528.7)	(120.5)	(124.1)
Deferred Income Tax	6.7	24.2	164.6	273.5	455.6	158.1	162.9
Other	57.8	12.4	33.1	18.2	(246.4)	269.0	277.0
Funds from Other Sources	**635.2**	**820.0**	**221.8**	**971.0**	**1,792.9**	**1,698.9**	**1,749.9**
Decrease in Long-Term Assets	323.0	2.7	0.0	275.9	179.0	240.8	248.0
Increase in Long-Term Liabilities	24.3	17.4	16.8	35.6	750.3	452.3	465.9
Funds for Capitalization	118.6	560.0	105.1	36.9	636.8	628.7	647.5
Increase in Capital Stock	37.2	44.8	16.8	283.6	140.0	348.8	359.2
Share Premium	110.1	155.1	61.4	26.0	65.1	0.0	0.0
Stock Increase in Controlled Companies	0.0	0.0	0.0	0.0	0.0	0.0	0.0
Donations for Investment	1.1	0.0	0.0	12.7	0.0	0.0	0.0
Other	20.9	40.1	21.7	300.3	21.7	28.4	29.3
USES OF FUNDS	**1,709.6**	**1,851.9**	**1,921.5**	**2,884.2**	**2,245.6**	**3,804.7**	**3,918.9**
Increase in Long-Term Liabilities	0.0	0.0	0.0	0.0	0.0	695.7	716.6
Increase in Capitalized Applications	0.0	0.0	0.0	0.0	0.0	82.5	85.0
Additions to Permanent Assets	1,282.9	1,500.0	1,701.4	2,686.6	2,015.6	2,262.6	2,330.5
Investments	9.5	4.3	13.7	5.1	8.5	38.5	39.7
Property, Plant and Equipment	1,185.6	1,400.8	1,593.9	2,490.5	1,870.2	2,159.1	2,223.9
Deferred Charges	87.8	94.9	93.7	191.0	136.9	65.0	66.9
Decrease in Long-Term Liabilities	364.2	252.2	128.5	105.2	123.5	663.2	683.1
Reduction in Capitalizable Resources	0.0	0.0	0.0	0.0	0.0	32.3	33.2
Increase in Long-Term Assets	0.0	0.0	18.4	21.2	0.0	0.0	0.0
Provision for dividends	46.0	95.7	60.9	69.7	49.9	39.0	40.1
TELEBRAS	23.4	55.6	36.7	22.8	27.3	33.2	34.2
Controlled companies	22.6	40.1	24.1	46.9	22.6	5.8	6.0
Other	16.4	4.0	12.3	1.5	56.6	29.5	30.4
Changes in Working Capital	**(156.5)**	**(279.1)**	**(567.0)**	**1,386.9**	**939.2**	**63.8**	**894.3**
Current Assets:							
Beginning of Year	482.9	235.4	582.0	764.1	874.5	846.7	1,168.3
End of Year	676.1	1,238.9	717.1	744.6	846.7	1,168.3	2,000.0
	193.2	1,003.5	135.2	(19.5)	(27.8)	321.6	831.7
Current Liabilities:							
Beginning of Year	(573.5)	(321.4)	757.1	1,554.9	2,664.9	1,697.9	1,956.6
End of Year	923.0	(1,611.7)	1,459.4	2,269.1	1,697.9	1,956.6	1,894.0
	1,496.6	(1,290.3)	702.2	714.3	(967.0)	258.7	(62.6)
Increase/(Decrease) in Working Capital	**(1,303.4)**	**2,293.8**	**(567.1)**	**(733.7)**	**939.2**	**62.9**	**894.3**
Ratios:							
Internal Cash Generation % Investment	77.4%	53.7%	71.1%	132.5%	74.4%	100.5%	137.7%

Source: TELEBRAS audited Financial Statements.
Note: 1992 statements estimated as of June, 1992 data.

BRAZIL
TELEBRAS, SA
Financial Statements & Balance Sheets
(in US$ million)

	1986	1987	1988	1989	1990	1991	1992
ASSETS	**8,543.6**	**8,351.2**	**8,507.5**	**10,968.2**	**17,241.2**	**18,731.6**	**19,118.9**
Current Assets	**620.1**	**672.7**	**713.9**	**753.3**	**846.7**	**1,168.3**	**1,262.8**
Cash and Equivalent	47.8	47.5	90.3	79.3	150.0	400.5	472.0
Accounts Receivable	427.7	470.5	502.3	533.3	595.3	604.5	622.6
Less: Bad Debt Allowance	(6.4)	(7.1)	(7.8)	0.0	(10.5)	(10.6)	(10.9)
Compulsory Loans/Deposits	6.3	4.9	0.4	0.0	1.9	22.8	23.5
Amounts Refundable	54.8	66.5	74.4	88.3	65.8	96.7	99.6
Sale of Assets	2.1	1.4	1.0	3.9	0.1	0.0	0.0
Inventories	38.1	35.0	23.1	19.4	22.3	24.4	25.2
Miscellaneous	40.3	49.1	19.9	24.7	15.8	22.4	23.0
Prepaid Expenses	9.2	4.9	10.2	4.4	6.1	7.5	7.7
Long-Term Assets	**43.8**	**16.8**	**18.9**	**40.9**	**46.7**	**612.0**	**400.3**
From Controlled Companies	7.7	11.3	9.2	9.0	0.0	0.0	0.0
Central Bank Deposits	10.3	0.0	0.0	0.0	27.8	424.1	200.0
Miscellaneous	25.7	5.5	9.7	31.9	18.9	187.9	200.3
Permanent Assets	**7,879.7**	**7,661.7**	**7,774.7**	**10,174.0**	**16,347.8**	**16,951.4**	**17,455.7**
Investments	50.6	39.5	90.6	95.4	63.0	101.2	100.0
Property, Plant and Equipment	6,953.9	6,703.8	6,723.9	8,757.3	14,565.1	14,914.8	15,362.3
Premises and Telephone Plant	10,354.3	10,095.4	9,715.4	11,819.0	23,516.6	25,441.9	26,205.2
Less: Accumulated Depreciation	(4,819.5)	(5,011.8)	(4,892.2)	(5,873.9)	(12,471.3)	(13,896.7)	(14,313.6)
Work in Progress	1,419.1	1,620.1	1,900.7	2,812.3	3,519.8	3,369.6	3,470.7
Deferred Charges	**875.2**	**918.4**	**960.2**	**1,321.3**	**1,719.7**	**1,935.4**	**1,993.4**
Interest During Construction	1,008.3	1,056.6	1,106.3	1,414.0	1,850.3	2,350.6	2,421.1
Financial Expenses	21.0	57.1	92.4	233.8	361.0	353.7	364.3
Research and Development	176.5	192.0	151.8	157.2	112.2	28.8	29.7
Other Deferred Charges	48.8	51.5	60.0	80.3	94.1	95.1	98.0
Less: Accumulated Amortization	(379.4)	(438.8)	(450.2)	(564.0)	(697.9)	(892.8)	(919.6)
LIABILITIES & STOCKHOLDERS' EQUITY	**8,543.6**	**8,351.2**	**8,507.5**	**10,968.2**	**17,241.2**	**18,731.6**	**19,118.9**
Current Liabilities	**846.5**	**875.1**	**1,456.1**	**2,277.8**	**1,698.8**	**1,957.6**	**1,654.0**
Accounts Payable	167.0	180.5	226.1	746.7	499.6	837.2	500.0
Payroll	85.3	116.6	127.2	480.6	319.0	575.1	592.4
Trade Payables	81.7	63.9	99.0	266.2	180.7	262.1	269.9
Taxes (Other Than Payroll)	118.2	115.5	227.6	233.7	386.6	246.9	254.3
Debentures	0.0	0.0	126.6	566.9	282.7	207.8	214.0
Loans and Financings	341.9	311.0	600.7	434.9	129.8	114.9	118.3
Bonds	0.0	0.0	0.0	0.0	0.0	105.7	108.9
Consignments	114.1	161.2	153.1	193.4	281.7	231.9	238.8
Profit share	58.0	59.3	67.1	46.9	49.8	41.8	43.1
Provision for contingencies	15.5	9.1	32.7	32.2	46.7	141.4	145.6
Miscellaneous	31.8	38.4	22.0	23.1	19.9	30.1	31.0
Long-Term Liabilities	**726.4**	**471.0**	**469.5**	**627.3**	**2,878.7**	**3,189.1**	**3,574.7**
Taxes (Other Than Payroll)	45.0	48.8	200.2	452.4	2,515.0	2,468.5	2,500.0
Loans and Financings	678.8	421.7	268.7	174.3	223.6	348.9	650.0
Bonds	0.0	0.0	0.0	0.0	0.0	202.2	250.0
Consignments	0.0	0.0	0.0	0.0	111.3	110.1	113.4
Miscellaneous	2.6	0.5	0.6	0.6	28.8	59.5	61.3
Deferred Income	**0.3**	**0.1**	**0.1**	**0.0**	**0.1**	**0.0**	**0.0**
Minority Interest	**1,165.6**	**1,109.0**	**939.0**	**1,295.4**	**1,877.9**	**1,895.3**	**1,850.0**
In Capital of Controlled Companies	304.2	107.2	43.5	36.2	47.3	85.2	50.0
In Earnings of Controlled Companies	861.4	1,001.8	895.5	1,259.2	1,830.5	1,810.1	1,800.0
Equity	**5,804.8**	**5,896.0**	**5,642.8**	**6,767.6**	**10,787.7**	**11,689.5**	**12,040.2**
Shareholders' Equity	**5,439.5**	**5,516.6**	**5,531.5**	**6,576.5**	**10,503.9**	**10,942.7**	**11,271.0**
Capital Stock	768.5	286.0	122.7	87.6	3,274.2	558.4	575.1
Monetary Reserves	0.0	0.0	921.9	1,072.9	0.0	3,816.9	3,931.4
Capital Reserves	1,234.9	1,654.8	712.7	830.2	1,174.1	1,160.2	1,195.0
Surplus Reserves	3,024.0	3,113.1	3,248.9	3,962.5	5,058.1	4,654.8	4,794.4
Retained Earnings	412.2	462.7	525.3	623.3	997.5	752.6	775.2
Resources for Capitalization	**365.3**	**379.4**	**111.3**	**191.1**	**283.8**	**746.8**	**769.2**
Expansion Plan Payments	245.5	343.9	95.6	186.9	148.9	306.0	315.2
Federal Government Contributions	111.0	33.4	14.4	2.9	8.4	395.6	407.5
Other	8.7	2.1	1.3	1.3	126.6	45.2	46.5
Ratios:							
Current Ratio	0.73	0.77	0.49	0.33	0.50	0.60	0.76
Quick Ratio	0.69	0.73	0.47	0.32	0.49	0.58	0.75
LTDebt/(LTDebt + Equity)	11.1%	7.1%	4.6%	2.6%	2.1%	3.1%	5.5%

Source: TELEBRAS audited Financial Statements.
Note: 1992 statements estimated as of June, 1992 data.

ANNEX II

TELECOMMUNICATIONS SECTOR REFORM MEASURES 1990-1991

A. Non-Public Services

Limited Service:

Guidelines for Limited Service Nov. 8, 1990 (Min. Infra. Ps 882, 884 & 886) outlines in draft form the types of areas in which private companies could enter the telecommunications service provision market, establishing private networks in new communities and for "condominiums" or residential/commercial agglomerations. These were drafts which were given 30-60 days for public comment and finalization (final measures announced piecemeal, see below).

"Additional Telecommunications Methods", Jan. 7, 1991 (SNC P 3), sets standards for services: (i) in areas not covered by basic tariff; (ii) extension or expansion of public service to areas not covered by the TELEBRAS investment program (or, literally, which would be installed "too late to meet needs of interested parties"); (iii) strengthening of specialized services.

First Set of Norms for Regulation of Limited Services, Jan. 8, 1991 (SNC P 4), a first attempt to define the scope, norms and standards of limited services.

Criteria for authorizing limited services. Jan. 21, 1991 (SNC P 20), dedicated line can be authorized for private development if it links a "well-defined" group.

Definitive Norms for Limited Services, July 17, 1991 (Pres. Decree 177). This is a Presidential Decree which defines limited services in a clear and legally-binding way, as any services "not open to public correspondence." (Especially satellite, microwave, and services for "well-defined" groups such as new communities, businesses, hotels, condominiums, etc.) Indicates under what conditions these services can be developed and operated, on a concession basis (period to be determined) by the private sector. Defined 35 key terms legally, in essence the sector's glossary of technical/legal expressions.

"Well-Defined" Groups Aug. 13, 1991 (SNC P 117), regulates execution of local telephone networks established by new communities and condominiums.

Data Transmission Sept. 30, 1991 (SNC P 9) detailed technical norms for terminal equipment interface with public telephone system (relevant to modem data transmission) proposed (to be subject to public review for 30 days).

Dedicated Lines Sept. 30, 1991 (SNC P 10) proposes standards for establishment of dedicated lines (to be subject to 30 days of public review).

Satellite Transmission Oct. 1, 1991 (SNC 230) establishes norms for provision of satellite communications, covering construction, launch and operation of both foreign and local satellites, to be authorized by SNC on a non-exclusive basis (i.e., competition is not prohibited).

Radio:

Feb. 6, 1991 (SNC 28), regulates participation of private Brazilian companies in provision of special radio service not destined for public use. Technical standards and procurement procedures.

Public Restricted (Cellular):

Nov. 8, 1990 (Min. Infra. P 883) Cellular service defined as "public restricted" and therefore not included among monopoly services.

Dec. 7, 1990 (Min. Infra. P 117) defines norms for cellular service provision.

Feb. 25, 1991 (SNC P 31), further establishes norms for development and operation of cellular telephone systems, norms, standards, procurement, under which two providers would exist for each city (State company plus a private, to be allocated through bidding process).

Sept. 24, 1991 (SNC P 228) State of Parana authorized radio frequencies for rural services and cellular phones.

Dec. 2, 1991 (SNC P 308) Establishes norms for bidding concession for cellular telephone services.

B. SNC Regulatory Functions:

Pricing:

Nov. 7, 1990 (Min. Infra. P 881), SNC given right to establish "subscriber participation" charge (telephone installation fee), on basis of cost of installation of line. Portaria establishes this rate as a maximum, below which state companies can charge, at their discretion. (This a draft measure.)

Feb. 11, 1991 (Pres. Decree 35), establishes that SNC has power to analyze tariffs, but not to set them (power for setting remains with Min. Econ).

Aug. 13, 1990 (Min. Econ. P 137) SNC given authority to establish rates for cellular telephone service.

Aug. 27, 1991 (SNC P 179) Working group established in SNC to prepare proposal to establish new tariff structure for all telecommunications services (including the "subscriber contribution"), taking into account

Sept. 5, 1991 (Ministry Economy P 836), liberates <u>international</u> telecommunications rates from price control, transferring to SNC the responsibility to set these rates.

Sept. 18, 1991 (SNC P 216) allows State companies some discretion in methods of charging for telephone calls, including discounts for off-peak hours.

Sept. 18, 1991 (SNC P 217) sets times for discount rates (above) to apply.

Equipment Certification:

Aug. 21, 1991 (SNC P 173) establishes technical norms for radio and telecommunications equipment, and gives SNC right to require certification of any product that it deems relevant (due to technical characteristics or its relevance to Brazil's industrial policy)

TELEBRAS Autonomy (non-pricing) and Structure:

Mar. 7, 1990 (Min Infra) announced that TELEBRAS could be legally restructured, sometime in the future, from 27 State companies plus EMBRATEL under one holding company (TELEBRAS), to 8 regional companies plus EMBRATEL, under one holding.

Sept. 27, 1991 (SNC P 7) allows state companies greater flexibility in charging interest rates and other charges to new customers (on installation fee)

C. Manufacturing Industry:

Jan. 9, 1991 (SCT P 20), list of over 200 protected "informatics" goods reduced to just 47. These 47 must continue to be compared with local "similar" products, and charged maximum tariffs (1.2 in 91, 1.06 in 92).

early 1991, the revised Informatics Law went to Congress, and was approved by the lower house on June 25, 1991. Now it is with the Senate, which was expected to vote in October (I don't know result yet ?).

July 20, 1991 (Min. Infra P) imports of telecommunications equipment will be allowed, providing that there is a clear difference in price and quality vis a vis the comparable locally-produced item.

Oct. 16, 1991 (Law 8244) sanctions PLANIN II, the National Informatics Plan. The emerging policy on imports of information technology will be to replace non-tariff barriers with tariffs, to be determined by Ministry of Economy; also advocates: "encouragement of participation of national technology in public switching equipment" and "stimulus for development and production of private switching equipment."

Concurrent Events

Jan. 13, 1991: Secretary of Communications, J. M. Rauber, makes speech recognizes explicitly the importance of changing the telecommunications tariff structure. Sets stage for year of attempted (and sometimes successful) reforms, following on first series of reform measures announced in November, 1990.

Feb. 16, 1991: J. Van Damme, Pres. of TELEBRAS, resigns, and publicly states it was due to political interference in the operations of the company.

Mar. 6, 1991: Rauber landmark speech, discussing agenda for reform: TELEBRAS restructuring; management transparency for operating companies; differentiated tariffs; end of subsidies and cross-subsidies; revaluation of assets and adequate remuneration for all companies; reform of peak/off-peak pricing policy; doing away with "non-tariff revenue", i.e., installation of phones to be recovered through rates rather than through "subscriber contribution".

July 1991: New President of TELEBRAS, Jose Ignacio Ferreira, promotes "Spring of Communications" program, under which private sector companies are encouraged to install phone lines in various neighborhoods and recover rates from consumers (through state companies).

July 1991: Rauber makes speech declaring that the relaxation of import restrictions on telecommunications equipment will lower cost of line installation.

July 1991: Minister of Infrastructure, Joao Santana, goes to Washington, Carla Hills, US Trade Rep., receives telecommunications reforms well, US firms pledge to invest US$ 1 billion.

August 1991: US Secretary of Commerce, Robert Mosbacher, goes to Brazil with US telecommunications private sector delegation, reaffirms investment pledge, support for reforms.

5. POLICY REFORM OPTIONS

In the last chapter we have documented some of the serious problems facing the Brazilian telecommunications sector, including large unmet demand, deteriorating quality of services, operating inefficiencies within TELEBRAS, lack of available finance for the major new investments required, and a dysfunctional role of government intervention. A real crisis in the Brazilian telecommunications sector may be averted if policymakers can devise imaginative new strategies that will allow existing backlogs of demand to be cleared rapidly, and a major increase of capacity for existing users, especially in the business community which is dependent on telecommunications services to function effectively in an increasingly competitive global economy.

There may be under way today in Brazil an historic convergence not only between the technologies of informatics and telecommunications, but between the institutional arrangements through which informatics and telecommunications services are provided to the public. The Brazilian constitution and legal regime impose constraints on the potential role of non-state-owned enterprises as providers of "public communications services". However, the present administration seems committed to revising the Constitution and opening new avenues for participation by the private sector in the provision of communications services.

Old, intractable problems are likely to require new ideas and a new openness to risk-taking by key players both in the public and private sectors of the Brazilian telecommunications industry. Telecom providers in the public sector may certainly view with wariness the potential new entrants from the private sector. However, many in the private sector--particularly among large industrial and financial firms--still lack confidence that the managerial and financial resources of the public sector can be relied upon and can provide an adequate basis for significant new levels of private investment in joint ventures or other new cooperative arrangements for investment in network infrastructure and new services.

Any new Brazilian telecommunications policies must, therefore, utilize external pressures from new private sector entrants and from users to stimulate higher levels of efficiency and responsiveness by TELEBRAS and EMBRATEL. They must also encourage the private sector to take a leading role in providing new services directly. For some years to come, a relationship will exist between the vitality and viability of the public network and the ability of new entrants and users to offer new services on a competitive basis. In short, the public and private sectors of the Brazilian telecommunications industry need each other, and any reforms and new initiatives must provide opportunities and incentives on a balanced basis for new entrants and established service providers.

The window of opportunity that is presented may be a narrow one. It is therefore of critical importance to begin a process of defining an agenda of specific policy initiatives through which the broad policy objectives for the Brazilian telecommunications sector already set forth by the present administration can be effectively implemented.

We outline below the key sectoral issues and present some broad policy prescriptions on pricing, structure, and the scope for competition and regulation in the sector. It is the judgement of this report that the magnitude of the sector's performance problem requires profound changes in its policy framework, regulation, and structure of ownership. The old arrangement, which assigned the operation and expansion of telecommunications to the State, functioned reasonably well until the early 1980s, but now needs to be replaced. In the interests of cost-effectiveness, creative productivity, and growth, we recommend that the Government of Brazil undertake substantive steps to move telecommunications activities from governmental to private control.

5.1 Key Sectoral Issues

The historical evidence on regulatory performance in Brazil, like in many other countries, reveals a disappointing record of dealing with market failures in the telecommunications industry. Most of the performance problems in the sector seem to have their origin in excessive government interference and pervasive regulatory control--the sector's current regime of competition and regulation, as well as its structure of governance.

Pricing policy. The single most important cause for the secular deterioration in the performance of the sector is the failure of past governments to prescribe adequate rate increases during the inflationary spiral of the last decade. As of October 1990, basic telecommunications tariffs (monthly access charge, local pulse, public token, and long-distance), in real terms, were between 17 and 37 of their levels in January 1978. These estimates were not properly adjusted to take into account gains due to technical change, which have been important in this industry. However, even when such an adjustment is made, real tariffs still remain at less than one-quarter of their level in 1978, indicating a dramatic erosion. The consequent inadequacy of telecommunications revenue has severely undermined the ability of the operating entities to invest in needed new facilities or to modernize existing installations.

In addition to having caused a substantial reduction in the inflation-adjusted average price of service, regulatory controls have created significant distortions within the tariff structure itself. Indeed, the Brazilian tariff structure seems to be at a significant variance with the pricing policies adopted by other advanced nations. The present pricing policies maintain an inefficient and inequitable regime in which certain groups of consumers are being subsidized in ways unrelated to rational social goals. The imposition of extremely high installation charges as a device for rationing demand for lines has not been effective since demand for basic access to the network is highly inelastic. Despite the high installation fee (approximately $1,500 for residential and $2,500 for business customers), there is still considerable excess demand as evidenced by the active secondary market for telephone lines. The existence of excess demand at such high installation prices is not counterintuitive given the country's low telephone penetration; as the secondary market prices indicate, the primary deterrent to business demand appears not to be the price, but the wait for service. For the existing subscribers, on the other hand, ordinary telephone services (monthly access charge, local, and domestic long-distance) are substantially underpriced. By

contrast, international calls are relatively expensive in Brazil compared to other countries. Low usage charges have undoubtedly accentuated the congestion problem by encouraging overuse of facilities.

This pricing policy has effectively decapitalized the system. The quality of service has suffered significantly. Equally detrimental has been the inability of the operating companies to respond effectively to new demands arising from an expanding modernized economy and higher national incomes. More than one million customers are still waiting to be connected to the network, after having deposited for at least two years the substantial installation fee. Furthermore, the prevailing structure of tariffs is inequitable and at significant variance with international practice. In most other countries, only a small portion of non-traffic sensitive investments in local loops are recovered from the initial installation fee, while the greater share is recovered from monthly access (rental) charges. The economic rational for this policy is that, the marginal cost of capital to the telephone company is generally lower than that faced by the individual (especially residential) customer. Given Brazil's incompletely developed capital markets for personal loans, the imposition of extremely high installation fees has clearly served to preclude low income households from obtaining telephone service, even if they could afford the equivalent monthly amortization. Also, since businesses do a disproportionately large amount of international calling, they effectively subsidize residential subscribers whose ordinary telephone services (access and usage) are substantially underpriced. However, businesses that are overcharged for their telephone service generally tend to pass their costs to consumers in the form of higher prices. This means that residential telephone service is being subsidized by a kind of a sales tax. Given the economic characteristics of the existing residential subscribers to the network, it would be difficult to defend such a subsidy on equity grounds.

Government interference. Governmental restrictions upon the structure and conduct of the industry, especially policy-induced constraints on investment and managerial discretion, have also contributed to the secular deterioration in the performance of the sector. Past governments have limited the ability of the telecommunications entities to reinvest operating surpluses and prohibited their direct access to domestic or international capital markets for financing investment outlays. State interference in investment decisions and the diversion of telecommunications revenue to a general government fund are likely to have caused inefficient allocation of resources and have clearly undermined national network expansion and service quality.

Constraints on sources of equipment. Telecommunications equipment prices are substantially higher in Brazil as a direct result of protective governmental policies. The exercise of "market reserve" and the excessive controls over imports of technologies and products have adversely affected the costs of the operating entities. This is manifest in the extremely high costs of incremental investment in the Brazilian telephone system. The average investment per line exceeds $4000, and the marginal cost of an access line in major urban areas is approximately $2500. These costs are twice as large as those observed in countries that either contain advanced manufacturing industries or engage in relatively free trade in equipment. In combination with low usage fees, high input prices have caused the Brazilian telecommunications system to lack adequate

internally-generated financial resources to satisfy demand and maintain quality standards.

5.2 Policy Reform Options

The common experience from other countries reveals quite clearly that significant net benefits may result from liberalization (the reduction of statutory restrictions on competition) and regulatory reform in this sector. It is therefore very encouraging that in the last few months substantive policy reforms have already been announced or are currently being contemplated. These reforms are consistent with the Constitutional requirement that all "public telecommunications services" may be offered only by TELEBRAS subsidiaries on the public switched network, while permitting entry into "limited services" that are offered to a "closed group" with a "common activity and interest". The revision of the informatics law and the concomitant relaxation of implicit or explicit trade restrictions, the new regulation for "limited services" establishing the right of private entities to offer value-added and private network services in parallel with the public switched system, the opening of satellite and cellular telecommunications services to private entry, the provisions for new methods of financing basic network expansion by groups of private parties, and the recently announced plans for tariff rebalancing, represent important steps in the right direction. In addition, the Government anticipates a 1993 revision of the Constitution and its limits on private sector offerings of telecommunications services.

These reforms, if properly implemented, could mitigate the existing public monopolies in the establishment of telecommunications networks and the provision of telephone services. However, some of the announced measures impose significant controls on the scope of competition by tightly regulating the licensing and provision of private network hardware and its interconnection with the public switched network; they also rely too heavily on technological distinctions between services which, as the experience of a number of countries during the 1980s indicates, are no longer valid. Indeed, the fact that these measures seem to place too much reliance on licensing restrictions and rules of interconnection (presumably to inhibit bypass and hence to protect the financial integrity of the public network) rather than on pricing rationality, exemplifies the difficulty of revising historic policies toward competition and industry structure without commensurate changes in the arrangements for regulatory oversight.

Given the crucial need for new infrastructure investment, it may be worthwhile for the Brazilian authorities to assess whether the protection of existing public services should be the key factor in deciding the terms and conditions of operating private networks. It should be noted that, in other nations, the argument against extensive investment in private networks is that it might strand investment in the public network. The premise is that the public network was constructed to serve all users, so that if a large number leave for private networks, excess capacity will result. This, in turn, forces the choice between higher prices for customers who cannot leave the public network or bankruptcy for the public telephone company. In Brazil, this argument is inapplicable, for the telecommunications industry faces excess demand--not possible excess capacity--for the foreseeable future. Thus, the Brazilian

authorities would better serve the public interest by encouraging and facilitating the development of private networks which enable large users to bypass the local exchange or even in some cases the entire switched network, and not by placing undue reliance on licensing and restrictive terms and conditions for operating very sophisticated hardware.

A number of possible reforms are available which do not depend upon the transfer of ownership and therefore would not violate the existing constitutional constraints on service. They include:

Rebalancing of the pricing structure. The highest policy priority is to rebalance the structure of tariffs, in part to reduce usage (and thereby to improve service quality) and in part to generate internal funds for capital investment. Such rebalancing could entail a significant increase in the basic monthly access charge (for both business and residential customers), as well as an increase in the usage fee for peak-period local and long-distance calls. In addition, the option of reducing the extremely high installation fee to customers that are willing to pay a compensating higher monthly rental charge must be considered (although it must be noted that even the current high installation charges are below the average cost of service due to the high equipment costs and perhaps the internal inefficiencies of the operating entities).

Creating an independent regulatory commission. The Ministry of Infrastructure has to be responsible for the design of a national telecommunications policy. An independent authority could be established to monitor the behavior of the autonomous public enterprises and to control prices, entry and exit, quality of service standards, accounting methods, and financial structure. This authority could be either an independent commission governed by statute and subject to the checks and balances of each of the Executive, Legislative, and Judiciary branches of the Government or, alternatively, a quasi-independent enforcement entity which may part of either the Legislative or Executive branches. Such authority would need to be given a clearly defined jurisdiction in the resolution of disputes and should establish transparent regulatory principles. A strong regulatory agency that is shielded from political pressure and exercises its function in an impartial and expert fashion could be very effective in protecting consumers from monopolistic pricing while at the same time authorizing rates that generate adequate revenue to finance maintenance and investment. The need to strike a delicate balance between broad national objectives (which at times might call for radical shifts in policy) and the maintenance of a stable and predictable industry environment (which is critical for the orderly development of a capital intensive industry) makes it highly desirable that the policy function which is fundamentally political be separated from the regulatory function.

Establishing a more "arm's length" relationship between the government and TELEBRAS. Establishing a clear mechanism for removing government from the immediate decision-making process in telecommunications is an indispensable precondition for improving the sector's performance. To secure future investment outlays that are sufficient for the integrity of the system and would permit needed network expansion, TELEBRAS must be granted a greater degree of autonomy and commercial orientation. This is the most effective means for ensuring that in the future a reasonable portion of telecommunications revenue is reinvested to maintain or expand service and avoid the *de facto* decapitalization of the

system. In addition, the autonomous operating entity must be allowed direct access to domestic and international capital markets. The recent successful

flotation of Eurobonds, despite the country's continuing macroeconomic problems, indicates significant confidence on the sector's growth potential by the international financial community.

Unrestricted resale. The experience from other countries reveals significant potential for competition and innovation arising from the usage of leased lines. The unrestricted resale of basic transmission capacity for both voice and data services could therefore be assigned a high policy priority and all prohibitions to offer services to third parties should be eliminated. Joint ventures between the main operating entity and private entrants for the construction of switching and transmission capacity should be encouraged. These measures will likely facilitate the construction of badly needed new capacity and permit a more efficient utilization of existing capacity.

5.3 Sectoral Vision

The State, after a good start through the 1970s, has largely failed in its mission to provide reliable telecommunications services on a national level. Hence, the centrality of the basic public network must be questioned. In addition, technological and economic developments, and inter-country experience, strongly suggest formidable advantages to a major rebalancing of the private-public sectors' roles in this industry.

The ongoing technological explosion and the substantial increase in demand within Brazil for better and more varied telecommunications services is generating enormous pressures for radically modifying public policy towards the sector. The traditional state-owned telephone system is increasingly seen as being incapable of responding sufficiently to the informational challenge and the rapidly changing market and technological conditions. Because of their financial, technical, and managerial resources, private sector entities may indeed have a comparative advantage in keeping abreast of this increasingly complex industry. In addition, the experience of the last decade with the Brazilian telecommunications industry demonstrates the extreme difficulty of placing an effective buffer between public enterprises and the central government. Indeed, the long-term solution to the problems of bureaucratic ineffectiveness, political interference, lackluster growth, and poor service delivery may require the greatest possible structural change--privatization, with the public's role restricted to that of regulation which seeks to ensure fair policy development and recognition of social and other policy objectives.

5.3.1 Policy Sequencing--The Framework of Competition and Regulation. One important lesson that emerges from the varied experiences of both developed and developing countries is that for privatization to result in significant gains in economic efficiency it must be accompanied by liberalization measures--the real issue is competition and not ownership as such. Policy sequencing, therefore, plays a very important role.

The establishment of a general policy framework that corrects for the larger distortions of resource allocation is an indispensable precondition for

successful privatization. Fiscal restraint and a cautious monetary policy represent an important first step. They create a decision-making environment that permits systematic business planning. The realistic alignment of the exchange rate is also important for it affects the whole structure of relative prices. Privatization is also more likely to strengthen allocative efficiency if it is accompanied by trade liberalization measures.

The greatest gain in efficiency will arise where competition and privatization are introduced simultaneously. To the extent that technological change has drastically reduced natural monopoly in the provision of long-distance service, privatization in this segment of the market should be coupled to policies of deregulation and liberalization; all legal barriers to entry and other policy-induced constraints should be removed, and regulatory intervention should be kept to a minimum or entirely eliminated. Local exchange service, on the other hand, retains many of the characteristics of natural monopoly, even after the modifying impact of technological change is accounted for. Thus, liberalization and privatization without regulation in local exchange service are clearly more problematic and are likely to run squarely into problems of efficiency. However, given the danger of regulatory failure, extreme care must be exercised in defining the scale and scope of regulatory oversight. Such regulatory intervention should be reduced over time as technological change renders local service an increasingly contestable activity.

For deregulation and privatization to succeed care should be taken that government restrictions are not replaced by restrictive business practices. Therefore, it is important that competition laws and policies be enforced in the telecommunications industry. Because the transition towards a more competitive market structure is likely to be a gradual one, the government may wish to retain residual authority to intervene in severe instances of market failure. Taking into account the specific characteristics of the industry and a perceived need to smooth the adjustment process, the government may also choose to modulate the enforcement of competition laws in telecommunications by exemptions targeted to specific practices or situations. In these cases, it is important that such exemptions are granted on a temporary basis and that their justification is regularly reviewed.

5.3.2 Short-Run Policy Initiatives. In view of the sector's substantial investment requirements, its deteriorating performance, and the history of political interference, privatization appears to be a necessary policy. However, in the short-run the existing public monopoly is likely to remain legally enshrined. During this transition period, substantial consumer advantages and overall benefits to the Brazilian economy could obtain through: the combination of corporatization and the removal of statutory restrictions on competition, i.e., measures of liberalization that do not conflict with the constitutional constraints; and the establishment of an institutional structure that clearly defines separate and distinct roles for policymaking, regulation, and management. More specifically, the government could undertake to:

i. Continue promoting competition and private entry in enhanced services that do not compromise the basic voice monopoly. Private sector involvement should be fully encouraged in value-added services, cellular and paging networks, satellite networks,

packet-switched and data communications networks, and international teleports. Cellular telephone networks could develop as an important complement to the fixed network, ultimately providing links to customers more quickly and more cheaply than laying fiber or copper. Satellite networks may be used as an adjunct to the trunk network to allow access to remote settlements which would be too expensive to serve using terrestrial means. Point-to-multipoint satellite applications would facilitate cost-effective broadcast of voice and data while two-way voice and data applications could offer businesses an effective alternative to leasing fixed lines. International teleports could connect local users directly with international carriers, thereby permitting high-traffic business users to bypass the public network.

ii. Separate operational management activities from the government so as to eliminate political and bureaucratic interference in operational decisions. TELEBRAS could be reorganized as an autonomous publicly-held corporation, with management being accountable to a Board of Directors that is insulated from day to day political pressures. The Board may be comprised of governmental appointees, but with terms of significant duration and under a clear mandate to act independently in achieving specified economic and social objectives.

iii. Establish an efficient, flexible, and well-focused regulatory structure for the sector which can respond effectively to rapidly changing market and technological conditions. In separating the regulatory and operational telecommunications activities, the government could create a strong and effective regulatory agency governed by statute that ensures independence (from both the telecommunications operators and the government), transparency, and accountability in its decision-making. Such an agency could act as a buffer between telecommunications operations and government, ensure performance accountability by the telecommunications operators to economic and social objectives, resolve disputes between competitors and between consumers and operators, and monitor changing industry conditions.

iv. Adopt a price cap method of regulating essential network services. Such a regulatory strategy could mitigate political intrusion on the sector's tariff policies and permit the sector's main operating entity to flexibly respond to new competitive opportunities.

v. Eliminate (gradually, if necessary) the policy of nationwide tariff averaging.

vi. Encourage private sector participation in digital overlay projects that establish reliable, high capacity communication corridors between major cities and business centers in parallel to the existing trunk network. Digital overlay networks could meet the growing needs of businesses for high volume data transmission, most of which are not adequately served by the existing public network.

vii. Fully explore all options for financing and managing local network infrastructure development by offering private investors the opportunity to step into a temporary "build operate and transfer" (BOT) role. The BOT concept could facilitate the flow of private resources into the expansion and improvement of the local public network, the weakest component of the Brazilian system, thereby alleviating a chief bottleneck to providing reliable telephone service.

5.3.3 Long-Term Structure. The stated objectives of privatization programs in the telecommunications industry tend to vary from time to time as well as from country to country. Four broad objectives have been common internationally:

i) to increase the efficiency with which the sector meets users' demands,

ii) to raise revenue for government activities and reduce the public sector borrowing requirement,

iii) to depoliticize enterprise decision making, and

iv) to promote distributional and political ends.

Significant conflicts can arise between these objectives, and their resolution can be an important determinant of the shape of the privatization program. Promotion of efficiency, for example, will require the introduction of liberalization and greater competition in the sector. The government's revenue from the sale of telecommunications assets, on the other hand, is likely to be higher if such steps are not undertaken; a continuation of certain monopoly privileges will reduce the risk perceived by potential buyers (by guaranteeing a stable flow of revenues) and, therefore, it will increase the price offered for TELEBRAS' equity.

These tensions in policy making are likely to be especially critical in Brazil, given the country's low telephone penetration ratio and the sector's quality-of-service problems. To the extent that an ambitious investment program to rapidly increase the number of telephone lines is one of the key objectives of privatization, the maintenance of a stable flow of telecommunications revenues and profits will be essential. The magnitude of the overall performance problem in the sector, on the other hand, renders the introduction of competition indispensable. It is the judgement of this report, that the promotion of effective competition is of paramount importance in this sector and that monopoly privileges should be granted only after their economic implications are thoroughly analyzed. In any case, they should be of very limited duration. The objective of competition should be given much greater emphasis than the wellbeing of the privatized entities.

Privatization may entail the sale of all or a part of TELEBRAS as a single entity or breaking-up TELEBRAS and selling some or all of the components, such as the long-distance network and the local networks. Alternatively, it may

entail more limited options for involving the private sector in the expansion and modernization of the public network.

There are several ways in which TELEBRAS can be restructured in order to promote effective competition and regulation before privatization. The operation of local and long-distance networks could be separated, perhaps with several regional network operators as in the United States. The division responsible for supplying customer premises equipment could be an independent entity, and the same is true of TELEBRAS' interests in mobile radio and value added services. Restructuring of this kind can increase significantly the effectiveness of competition and can minimize the regulatory burden because: i) there may be scope for competition between the different component parts which would enhance the incentives of their managers and promote internal efficiency; ii) the effectiveness of regulation would be enhanced because the monopoly of information would be broken; and iii) the separation of network and equipment supply operations would diminish the danger of anticompetitive behavior.

The experience of developed countries indicates that in telecommunications, increased competition and structural contestability are made possible by a rapidly changing technology. A more aggressive agenda for reform of public policy suggests significant regulatory decontrol and a system of governance in which service provision is decentralized; in which potential entrants with new products and new techniques have the opportunity to serve the public; and in which competition should be relied upon to solve allocation problems and perform the basic regulatory function on behalf of society. In the context of this "advanced country" benchmark, the following measures represent a potential direction for policy reform in the sector:

a. The national holding company divests itself of all its local operating companies.

b. The divested local operating entities are managed as autonomous public enterprises with no financial links to the federal government, and are limited in providing only local and intrastate service. In addition, some or all of the regional operating companies could be privatized and assigned regulated private utility status.

c. The national holding company is limited in providing only long-distance (interstate and international) voice, data, and video transmission. The new operating entity has no financial links to the government and eventually is privatized. All entry restrictions and price regulation in the long-distance service are eliminated.

d. A local interconnection fee (access fee for connecting to toll carriers) is levied to finance network expansion.

e. A regulatory authority is established to oversee the operations of the local and toll carriers. The regulatory authority establishes equal-access rules governing interconnection arrangements for the national toll market.

Alternatively, the national holding company is privatized as a single entity. To meet specified obligations of network expansion, the private entity is granted an "exclusivity" period during which it enjoys a monopoly status. At the end of the exclusivity period, all entry restrictions are eliminated.

5.4 Recent Policy Developments

In the last few months the Brazilian telecommunications industry has been subject to pressures for decontrol and reduction in the statutory restrictions on competition. These pressures have emanated from: the almost universal belief, within Brazil, that the sector is confronted with grave and potentially debilitating problems; and the broad policy pronouncements of the Collor administration on the need to curtail the role of the public sector and to foster private initiative.

Several measures encompassing private entry in peripheral services, relaxation of explicit or implicit trade restrictions on input equipment, and new methods of financing basic network construction, have been recently implemented. The policy changes that have been announced so far, represent an important step in the right direction and the end of the era of government-controlled monopoly. More specifically these measures include:

- a revision of the informatics law substantially reducing previous restrictions on imports of electronic technologies and products;

- elimination of the monopoly held by EMBRATEL in data transmission, whereby private entities will be permitted to construct data networks and resell services to third parties;

- provisions for financing basic network construction by groups of private parties (e.g., communities, condominiums, etc.), with such facilities subsequently sold to the public system; and

- private entry in the provision of satellite and cellular telecommunication services.

In addition, the installation fee for basic telephone will be increased to $4,000 (this figure being a system-wide maximum, with the local operating entities maintaining the discretion to charge a lower price). Plans are also underway to gradually revise the local access charge from $1.00 to $8.00 during a 24-month period.

6. OPTIONS FOR RESTRUCTURING AND FINANCING THE TELECOMMUNICATIONS SECTOR

This chapter offers a detailed package of policy options and proposals for reorganizing and restructuring the business activities of the telecommunications sector. The specific initiatives outlined below center around three broad clusters of policy concerns: (i) the introduction of competition from new private sector service providers and the implications of new competition for TELEBRAS and EMBRATEL; (ii) the restructuring and reorganization of various companies under the TELEBRAS holding company umbrella including EMBRATEL; and (iii) specific changes in the Brazilian regulatory and policymaking process that may required by any likely changes in industry structure and competition policy.

These proposals, if implemented, would introduce an entrepreneurial element into the telecommunications sector while preserving sufficient control in TELEBRAS to foster efficiency and economies of scale. They would facilitate the existing operator's ability to finance the rapid and efficient expansion of the telecommunications infrastructure and, in particular, increase the number of subscribers served. It should be noted, however, that the proposed initiatives are not intended to serve as a long-run substitute for privatization. Instead, they should be viewed as an effective and rapid policy response to a situation of crisis; if implemented properly, they may serve as a prelude to privatization.

6.1 Issues Concerning the Opening of Competition in the Telecommunications Sector.

6.1.1 Defining the Scope of Competition. The current Brazilian administration seems to be open to the idea of creating opportunities for increased private sector involvement in the telecommunications within the constraints imposed by the Brazilian Constitution. The Constitution requires that "public communications services" be provided through state-owned telecommunications entities. Though it is beyond the scope of this paper to discuss relevant legal principles applicable to an interpretation of this Constitutional constraint, there appears to be some flexibility as to how this important legal issue is likely to be approached. For example, Brazilian policymakers appear to believe that relevant international legal principles from the ITU may be of some assistance in establishing an appropriate demarcation between "public" and "private" services. It should also be noted that there is a considerable body of regulatory experience from other countries, particularly the United States and Japan, that have attempted to distinguish between "public" services that are not offered on an indiscriminate basis to the public at large.

Moreover, in interpreting broad constitutional principles, it may well be appropriate in the Brazilian environment, as is the case in other legal regimes, to give meaning to legal obligations taking into account current institutional and economic realities. Though it is not possible to offer here a definitive commentary on what range of activities might ultimately be legally permissible, it might be useful, nevertheless, to examine what distinction between "public" and "private services" might be desirable or beneficial from a policy standpoint, assuming such an approach were legally sustainable.

Brazilian policymakers appear to believe that private sector service providers could provide a substantial spur to the performance of TELEBRAS and its various affiliated companies. Such an impetus is likely to be provided by both actual and potential competitive entry. Thus, an approach that leaves open the possibility of new entry -- even if the Government decides not to authorize new entry immediately -- is likely to keep existing service providers on their toes.

At the present time, Government policymakers seem to be focusing most of their attention on the possibility of competition with respect to certain services on the periphery of TELEBRAS' or EMBRATEL's existing service offerings -- mobile cellular systems, paging, or private satellite systems. Less attention has been centered on options for initiating various types of private networking services, including enhanced or value-added services, as well as various managed data and voice network services.

A few observations about the emergence of competition with respect to some of these various services may be useful at the outset.

Competition with respect to Cellular Services. The key issues here may not be whether competition is permitted by private operators, but what will be the terms and conditions of such competitive entry and its implications for TELEBRAS. An important threshold issue will be whether new entrants will be obligated to adopt pricing policies parallel to those currently being utilized by TELEBRAS in marketing cellular services in Rio de Janeiro and Brasilia. TELEBRAS currently requires potential cellular telephone subscribers to make a substantial upfront capital contribution several times that required for connection to the local exchange network. A new entrant in the cellular market seeking to gain market share rapidly might not be at all inclined to market services based on such a price structure; rather, it might opt for a structure of high monthly fees and contractual commitments to lock in customers.

Such a new pricing strategy might result in a significant influx of subscribers and soak up substantial unmet demand for traditional telephone services. It would confront TELEBRAS with a serious question as to whether it could or should respond with similar pricing policies in marketing its own cellular services. Moreover, substantial new demand for cellular services could place significant pressure on already congested segments of TELEBRAS' terrestrial network.

Rather than thwart new pricing strategies that would eliminate or reduce traditional upfront user payments, it may be productive for Brazilian policymakers to utilize the authorization of new cellular systems as a first step toward restructuring existing terrestrial telephone tariffs. Moreover, policymakers should encourage a cooperative effort between TELEBRAS and new entrants to assess the likely impact of new cellular services on existing switching facilities. It may be possible to encourage some new joint investments by TELEBRAS operating companies and new entrants (with their capacity to access domestic and foreign capital markets) to upgrade key nodes through which cellular traffic is likely to flow. Such upfront joint investments might be preferable to negotiating a scheme of access charges for the use by new cellular entrants of local exchange facilities.

Government policymakers will have to address these issues concerning access, as well as other more mundane issues concerning how new entrants will be selected and licensed. But equally importantly, they will have to decide whether TELEBRAS will be able to operate in the cellular market on a fully symmetrical basis. If new entrants are allowed full pricing freedom, will TELEBRAS be as well? If new entrants pay access charges, will TELEBRAS as a cellular service provider have to as well?

Brazilian policymakers must, of course, decide at the outset whether TELEBRAS should be permitted to participate fully and actively in the competitive sectors of the Brazilian telecommunications arena. There might, of course, be some argument in favor of affording new private entrants a "window" to gain a competitive foothold. It might even be reasonable to encourage TELEBRAS to focus itself on core infrastructure services. However, the public is likely to benefit most from having a choice of services. Little would be gained from substituting a private for a public monopolist, and TELEBRAS' experience and exposure to competitive market conditions in peripheral markets is likely to trickle down and affect its performance with respect to its core services.

Pursuing a policy of "competitive symmetry" between new entrants and established service providers does not necessarily mean that regulatory conditions need to be equalized immediately or that there is no need for ongoing competitive safeguards for new entrants. It does imply, however, an initial commitment by policymakers to a truly level competitive playing field as a key policy objective.

Competition in Private Satellite Systems. Brazilian policymakers have indicated recently an openness to allowing competition with respect to the provision of private satellite systems. Such competition could apparently be implemented either through the launching of a private satellite systems competitive with Brasilsat -- an extraordinarily expensive venture -- or through the lease of transponders on an existing authorized international satellite system such as PanAmSat or Intelsat.

Another alternative might, of course, involve allowing private entities to lease or purchase transponder capacity on Brasilsat to meet their own needs or the needs of a limited group of users through a network of earth stations owned and operated by such private entities. At the present time, appliance and downlink stations must be owned and operated by EMBRATEL. A limited step toward providing more leeway for users and attracting new investment capital would be to allow user ownership and operation of networks of satellite earth stations.

Government policymakers certainly must focus careful attention on the range of services that can be provided utilizing satellite-based transmission facilities. One option would be, of course, to permit only the provision of a wide array of value-added data or information-based services. However, given the critical need in Brazil for advanced and reliable telecom infrastructure, it might be advisable to consider the possibility of allowing both data <u>and</u> voice networks to develop among limited groups of users.

EMBRATEL would no doubt have a legitimate basis for concern about divergence of significant amount of revenue-generating traffic from its own

network. However, some private network traffic might be usefully diverted over satellite links and around potential points of congestion in local switching networks; certainly there appears to be ample potential demand to assure the full utilization of existing transmission facilities.

Policymakers should provide an option for interconnection of private networks into the public switched network as long as local switches are programmed to assure access only to a predesignated set of local numbers. In this way, private networks can be prevented from operating as a complete substitute for public network services. To the extent that interconnection with the public network is permitted, operators of private networks, like mobile cellular operators, might be expected to pay an "access charge" or to contribute in some other way to upgrading the local network infrastructure.

Any policy favoring the authorization of private networks of earth stations need not require that an airtight demarcation be established between public and private services. For example, EMBRATEL might be encouraged to enter into lease arrangements with the owners of private earth stations; it could then use such privately owned earth stations to provide public communications services, especially in rural areas of Brazil. Thus, a policy favoring new private investment in earth stations might be utilized to encourage more universal provision of services throughout Brazil.

Competition in the Provision of Value-Added and Managed Data and Voice Networks. As noted above, there has yet to be much discussion in Brazil of the possible authorization of new value-added services. Such services can, of course, be provided utilizing not only private satellite networks, but also existing distribution services and facilities of EMBRATEL and TELEBRAS.

The liberalization of the provision of value-added services has been an essential element of reforms of telecommunications policy that have been undertaken in many countries around the world. There are, moreover, a myriad of different approaches to defining the scope of competition in the provision of services -- as opposed to the competitive provision of network infrastructure -- that might be permitted. Many policymakers in other countries seem to be gravitating toward an approach permitting the competitive provision of all services.

It is especially important for Brazilian policymakers to break down rapidly any barriers that prevent industrial or financial firms from offering data and voice services to affiliated companies, customers, or others with whom regular business relationships are maintained. Moreover, to assure the full dissemination of information processing systems and technologies, it may also be advantageous to allow independent service providers to develop such value-added date services.

Unlike in many countries where the telecommunications infrastructure is highly developed, the key to encouraging the development of value-added services in Brazil involves more than the elimination of regulatory or tariff-related barrier to the provision of third party services. In Brazil, success in expanding new informatics services will depend significantly upon enhancing investment in existing telecommunications infrastructure. Thus, as will be

outlined in Section III, it is critically important to develop new sources of investment in the basic telecommunications infrastructure in Brazil in parallel with any initiatives to open the market for the provision of value-added services. Moreover, the potential for developing new information services cannot be fully achieved without liberalizing current restrictions on the import of telecommunications and computer-related hardware and software.

An Overall Approach to Defining the Scope of Private Communications Services. One option for Brazilian policymakers is certainly to define the scope of private communications services in vertical terms, i.e., as services that are peripheral to core switching and transmission facilities in the network. Alternatively, private communications services could be viewed in horizontal terms, i.e., as an "overlay network" that utilizes transmission and switching offered by EMBRATEL and other TELEBRAS affiliates as well as some privately supplied switching equipment. From a legal standpoint, it would appear, however, to be an essential element of any private services that they not be provided to the public at large on an indiscriminate basis.

Though the initial reaction of existing service providers in Brazil may be to favor a rather narrow definition of private communications services, it may be in their long-term interest to take an entirely different approach and promote a framework that would allow a diverse spectrum of services to be offered as private communications services. Under such a framework, Brazilian policymakers would ultimately have to determine the scope of services that should, as a policy matter, by provided by both private and public sector service providers. However, if particular types of services were deemed to be private communications services, TELEBRAS and EMBRATEL would presumably have increased flexibility to attract private investment into any separate subsidiaries through which any such private communications services might be provided. Moreover, any such services offered through separate subsidiaries and also subject to competition from private service providers might well be subject to less stringent regulatory oversight than traditional public services.

There may, in short, be significant benefits for existing service providers, and certainly for users of telecommunications services, to an approach that allows significant leeway for the provision of private communications services -- both those that are peripheral to the existing infrastructure and those that represent an "overlay" on such infrastructure but are not offered generally to all users.

6.1.2 Role of Existing Service Providers in the New Competitive Environment. As noted above, existing service providers should be afforded wide latitude to enter and vigorously compete in providing "private" communications services. TELEBRAS and EMBRATEL should be encouraged, both for commercial considerations and in the interest of competition policy, to participate in the provision of private communications services through carefully delineated separate business groups. Such separate business groups need not necessarily be constituted through new separate corporate entities or affiliates. However, the creation of new business units or subsidiaries may make it easier to implement line-of-business accounting and profit center management systems. Moreover, new management efficiencies and practices may be more rapidly introduced in separate business units than in a large scale and far-flung state corporation.

Certainly it may not be necessary to establish separate entities for each separate line of business that is deemed a private communications service. Clusters of services could be grouped together in a single subsidiary with separate accounting and profit center management systems. However, it may make a great deal of sense to separate the existing core infrastructure activities of TELEBRAS and EMBRATEL from their other activities in competitive sectors of the Brazilian telecommunications arena.

6.1.3 Safeguards for Emerging Competition in the Provision of Private Communications Services. Establishing separate business units within the TELEBRAS-affiliated companies for the provision of competitive services helps in assuring fair competition among new and established service providers. Separate business units backed up with line-of-business accounting systems should facilitate the detection of cross-subsidization of competitive or private services by other services such as local exchange services that are not subject to competition. Moreover, Brazilian regulators can more easily insist that TELEBRAS companies offering "public communications services" -- and especially those essential for the provision of private or competitive services -- deal on a nondiscriminatory basis with affiliated and non-affiliated companies. Policies intended to assure such non-discrimination are also likely to provide an incentive for TELEBRAS to develop cost-based "transfer" prices for services that are essential to the provision of competitive services. As TELEBRAS develops cost accounting systems for such essential services, it may likewise increase its overall capabilities to account for costs and revenues attributable to its various other lines of business.

As new services are opened for competitive entry, Brazilian regulators and TELEBRAS will have to devise mechanisms for dealing with problems of interconnection between new private services and existing public communications services. Such interconnection issues have many different dimension. They involve concerns about the technical and operational capabilities and services to be provided to a new entrant, the pricing of such capabilities, and concerns about mechanisms for generating subsidies for new infrastructure development.

Defining the scope of any access or interconnection arrangements that may be required will be a complex and demanding task. It will depend first and foremost on good faith negotiations between new and existing service providers. However, it will also require Brazilian regulators to establish guidelines for such negotiations as well as procedures for resolving disputes over interconnection arrangements. As noted below in Section II.C., the introduction of competition into the Brazilian telecommunications sector will require Brazilian regulators and policymakers to undertake a demanding new set of responsibilities. It will fundamentally change but certainly not eliminate the current regulatory role of the Ministry of Communications as is more fully discussed below.

6.2 Reorganizing and Restructuring TELEBRAS and its Affiliated Companies

An essential element of the process of reforming and restructuring telecommunications policy around the world has been to increase the efficiency and entrepreneurial capabilities of existing service providers. NTT, AT&T and seven new Regional Bell Holding Companies, British Telecom, the Deutsche

Bundespost, France Telecom, and the Dutch PTT are among the more prominent of the world's telecommunications carriers that are experiencing what has become a continuous process of institutional modernization and reform. New efficiencies have been seen as essential to meet the rigors of increasingly competitive markets in the world telecommunications arena and to generate internally the funds needed for new facilities and services.

The new Brazilian administration has embarked on an important initiative to consolidate TELEBRAS' current 27 local operating companies into eight regional companies. Such a consolidation should, in particular, increase the scale of operation and efficiency of TELEBRAS operating companies located in less developed areas of Brazil. Below are outlined a few general observations about some options and initiatives that might warrant further discussion in the reorganization process.

6.2.1 Continuing and Accelerating the Development of Line-of-Business and Company-by Company Accounting Systems under the TELEBRAS Umbrella. TELEBRAS is currently able to marshall an impressive array of operating and pricing data concerning its current activities. However, like many other telecommunications operating companies around the world, it is still in the process of implementing new accounting systems to allow the delineation of costs and revenues on a line of business or service-by-service basis within each of its various operating companies.

The continued development of improved systems of cost accounting and profit center management is one of the important keys to assuring that TELEBRAS achieves increased efficiency and competitiveness. However, many shifts in the direction of current managerial and pricing practices cannot await the full implementation of new cost accounting systems. It may be necessary on the basis of separate cost and management analyses to explore some new approaches to the operation and management of TELEBRAS.

6.2.2 Reassessing TELEBRAS' Prices and Price Structures. One of the key means of increasing TELEBRAS' capability to finance new infrastructure investment may be a thorough and far-reaching review of its current pricing policies.

One obvious area requiring immediate attention involves the pricing of local exchange services. Though definitive studies demonstrating the cost of providing local exchange services on a region-by-region or exchange-by-exchange area have not been undertaken in the context of this preliminary sectoral review, many observers both within and outside TELEBRAS believe that prices for local exchange services should be raised by factors estimated to range from 6 to 10 times their current levels to assure adequate recovery of the costs involved in providing local exchange services. Local exchange costs are currently metered in Brazil; thus, it should not be difficult through modest changes in existing billing systems to decrease the number of pulses available for a fixed fee and increase the per unit cost of local exchange calls.

Obviously, price increases for local services will not be popular among existing telephone subscribers. However, current telephone rate structures impose on subscribers a staggeringly large upfront payment to obtain telephone services in the first place. Thus, it is difficult to see how it can be

persuasively asserted that significant increases in local charges could interfere with the objective of assuring universal service when current tariffing policies effectively establish a wall around telephone services and make it available only to those able to make at least a $2000 per line capital contribution.

As a matter of practice, moreover, a secondary market in local telephone lines appears to be in active operation in major urban centers like Sao Paulo, where local exchange lines are readily available to individuals willing to pay premiums ranging up to four times the "tariff price" for access lines. In these circumstances, pricing policies that increase local charges in the context of a phasing-down of the current large initial user fees paid by subscribers should have the effect of stimulating demand and increasing the self-financing capability of TELEBRAS.

Such upward adjustments in local exchange prices are certainly in line with the process of tariff restructuring being undertaken in other countries around the world both in developed countries and in countries still developing their telecommunications infrastructure, such as Mexico. In the event, however, that far-reaching, across-the-board price adjustments may be politically unpalatable to implement in the early stages of the process of sectoral restructuring now underway in Brazil, it may be possible to identify various steps for implementing new price structures on a selective basis.

For example, in the process of installing new digital or overlay facilities, it might well be feasible to establish new price structures set at international levels for "new" generation exchange and transmission facilities. Though telephone plant engineers might resist the idea that the transition from old analogue to digital plant and equipment involves the provision of a "new" or "different" service, it may not be at all unwarranted to establish a new category of service from a marketing standpoint and to price services based on new digital equipment at "international levels". In effect, with the improvements in capacity, performance, and reliability resulting from the installation of new digital plant, subscribers may be in effect offered the equivalent of the difference between "first class" and "coach" service, to make an analogy with the transport sector where service quality-based distinctions may be more common than in the telecommunications sector.

The rationale for price distinctions might, of course, be based on merely marketing considerations or on the existence of new facilities or even of a separate entrepreneurial entity offering services from a new "overlay" network. Whatever the actual rationale, the central notion is to find a means of rapidly introducing new pricing structures and arrangements into major urban centers and exchange areas in the Brazilian telecommunications network.

In parallel with the process of readjusting local tariffs, it also seems likely that interexchange tariffs within Brazil need to be aligned better with their costs and may require upward adjustment. By contrast, international tariffs are extraordinarily high and should in all likelihood be significantly reduced. Such price reductions would hopefully increase significantly calling volumes and result in continued levels of overall profit contribution.

6.2.3 Developing Strategic Priorities for New Infrastructure Investment. Obviously, repricing existing services -- along with the initiation of new competitive private services -- will result in new demands on the limited existing capacity of the Brazilian telecommunications network.

TELEBRAS now has available rather complete data concerning "choke points" in the existing network and areas where investment in infrastructure is urgently needed. As noted at the outset, the backlog in demand for subscriber lines, as well as political pressures and exigencies generated by shortages of investment funds in the last few years, have skewed recent investment priorities in TELEBRAS. The result has been, in the view of many observers, significant underinvestment in tandem switching facilities, resulting in traffic congestion backing up into the local exchange network.

TELEBRAS should, therefore, as a high priority develop an investment program for high traffic density local exchange areas and interexchange routes that would relieve current congestion and allow for significant stimulation of traffic through new price structures and service capabilities. Such a strategy would be geared to increasing efficiency and profitability of services rendered to the relatively small number of customers who, in Brazil as in other countries, are responsible for an overwhelmingly large portion of the overall revenues and profits generated by TELEBRAS and EMBRATEL.

By focusing on these key customers who are critical sources of revenues and profits, TELEBRAS might well increase its overall self-financing capability and ability to expand services to new customers and new geographic areas. For such a new entrepreneurial initiative to be viable, TELEBRAS must also devise imaginative, new mechanisms for attracting additional investment in network infrastructure needed to serve the highest areas of demand. Price reform alone will not generate needed funds quickly enough. Under Part III is outlined one possible mechanism for generating new investment funds through a form of lease-back financing. However, changes in management policies and structures will also be required to increase the dynamism and self-financing capability of the Brazilian telecommunications sector.

6.2.4 Decentralizing Pricing and Management within TELEBRAS. One of the important implications of the pricing strategy outlined above is that Brazilian policymakers would begin to reassess current uniform pricing policies among the various TELEBRAS operating companies. In the largest operating companies -- Telesp and Telerj --price reform might be implemented on a very accelerated basis. However, in each of the existing 27 operating companies, and ultimately in the new regional companies, local exchange and interexchange prices would be based more closely upon the actual cost of providing services. Each of the new regional companies would be encouraged to operate on a self-sustaining basis and to adopt pricing policies and cost cutting initiatives to achieve such a financial objective.

Obviously, it may be difficult or even impossible for some operating companies to operate on a financially viable basis without the subsidies and transfer payments that now flow within the TELEBRAS group. Policymakers should, however, strive to make intercompany transfers and subsidies fully visible and transparent. In this way, the management of local companies is likely to have

a much stronger incentive to operate as efficiently as possible. An essential step in achieving increased autonomy among TELEBRAS companies is likely to be a complete overhaul of the current systems through with interexchange revenues are shared among the various regional operating companies. As a general matter, each local operating company should be required to establish cost-based tariffs for the use of local exchange facilities and any interexchange trunks utilized by EMBRATEL in providing interexchange or international services. Then, on top of such a cost-based system of tariffs, an explicit system of transfer payments to subsidize high cost operations or companies in need of investment capital for system expansion should be implemented.

Such a transition from a division of revenues system with buried subsidies to a scheme of access tariffs with more transparent subsidies involves a process of almost unimaginable complexity to lay analysts of telecommunication policy. However demanding the task, it must be undertaken if the Brazilian telecommunications sector is truly to enhance both its efficiency and its capacity to increase the geographic and demographic reach of the Brazilian telecommunications network.

In order to implement such a complex restructuring process, TELEBRAS as a holding company--in tandem with Brazilian policymakers and regulators--will be a crucial catalyst and source of expertise. However, it may also be necessary in very fundamental ways to abandon the "convoy theory" of management within the TELEBRAS group. Each of the operating companies must not be required to move at the speed of the slowest and least adaptable companies under the TELEBRAS umbrella. On the contrary, the leading and most advanced companies should be encouraged to become the "economic engines" that provide the necessary financing and cash flow to expand the existing infrastructure.

A policy of encouraging increased autonomy on the part of companies under the TELEBRAS umbrella may have some important implications for EMBRATEL as a provider of interexchange services. EMBRATEL provides some of its services such as private line and telex services directly to its customers. Other services, such as long distance services, are provided indirectly in cooperation with the various TELEBRAS local operating companies.

In the future, it may be useful to structure some new relationships among EMBRATEL and TELEBRAS operating companies. For example, EMBRATEL currently has some degree of flexibility to install special local loop connections for its customers such as high capacity microwave links; however, local operating companies tend to provide most other local loop connections.

One option may be to increase EMBRATEL's direct relationships and contacts with subscribers, especially large subscribers, with respect to long distance services. Certainly, EMBRATEL should be able to take a leading role in marketing value-added networks or special voice and data networks for large customers. Perhaps it should even take a leading role in developing plans for a network of "overlay" facilities as discussed in Section II.B. above.

Brasilsat seems to be marketed as a separate "product line" within EMBRATEL. However, there may even be some advantages in providing the satellite marketing group with increased autonomy and internal incentives to respond to

customer demand. Internal rivalries within EMBRATEL or the TELEBRAS group can be exploited to enhance overall performance and responsiveness to customer needs.

A further possibility that might warrant exploration is to allow local operating companies some leeway to market value-added services or even managed voice and data networks. Whether such services were marketed by EMBRATEL or a local operating company, they would inevitably utilize the same infrastructure and plant. Increased autonomy and rivalry within the TELEBRAS group -- if linked with better line-of-business accounting and performance-related compensation systems -- could allow a substantially increased level of effective competition within the existing TELEBRAS system even without new private sector entrants or changes in the Brazilian constitution to allow private sector provision of "public communications services". However beneficial it might be to stimulate such rivalries relationships within TELEBRAS, such "internalized" competition should be viewed only as complementary, and not as an alternative, to policies significantly increasing private sector competition to TELEBRAS and EMBRATEL.

6.2.5 Reorienting Management Systems and Pricing Policies to Become More Market and Customer Oriented. Because of extraordinarily adverse economic conditions in recent years and shortages of investment funds, TELEBRAS has been required to operate with pricing policies and management practices which effectively wall it off from its current and potential customers.

High initial subscriber fees essentially constrain demand and provide a seeming rationale for five-year investment plans showing TELEBRAS regularly falling approximately 1 or 2 million lines short of demand as total lines are increased over the next decade. But such five-year plans seem to ignore the reality that most observers see the current shortfall of supply at between 6 to 10 million lines even with the current high one-time subscriber fee.

It would be critically important for TELEBRAS to begin to develop scenarios in which the real level of necessary investment capital can be estimated and in which the means of generating such capital can be openly discussed. What these scenarios are likely to show is that price restructuring, especially of local service tariffs, is drastically needed and that demand cannot be met without the attraction of huge new sources of investment capital from foreign and private sector investors.

Such stark economic realities may require a very searching reappraisal of the ability of state enterprises to generate the investment capital needed for the telecommunications sector. Indeed, they may provide an essential economic context within which to evaluate current proposals to increase private participation in the telecommunications sector. More significantly, they may strongly point to the need to remove current legal and other impediments to privatization in the Brazilian telecommunications sector or at least to exploit on an urgent basis possible new financing mechanisms such as those set forth in Part III.

In a more mundane way, as well, TELEBRAS should be carefully assessing options for making its management structure more customer-driven and less influenced by an engineering or operational orientation. In the process of organizational reform in many countries, marketing groups have been established

to make executives concerned with marketing and ensure that customers provide the driving force and entrepreneurial impetus for the sector.

6.2.6 Restructuring Regulatory Policies and Procedures. The need for new regulatory and entrepreneurial policies is likely to intensify the potential conflict between the roles of Government as controlling shareholder and as regulator of a company like TELEBRAS. Institutional separation of these differing roles within a Ministry or even between Ministries with differing orientations may be essential to assure that regulatory and entrepreneurial initiatives do not become intermingled. What might be sound intervention by a chief operating officer might involve improper micromanagement by a regulator. And what might be good hands-off regulatory policy might not provide the focused direction required by a huge state corporation in search of new business strategies.

The key challenge facing the Brazilian Government is, it would seem, how to devise the most effective possible business strategy and regulatory policies for TELEBRAS. TELEBRAS would benefit greatly from a process in which its rights and obligations under the newly emerging Brazilian regulatory framework are carefully delineated in some type of legally binding instrument -- either a license or franchise or a long-term management contract.

As TELEBRAS' chief shareholder, the Brazilian Government might well wish to put the burden on the TELEBRAS management in the first instance to develop a long-term strategic plan, investment and financing options, and proposals to restructure and consolidate operations. It is almost inevitable that new accounting systems and internal pricing systems cannot be devised without relying fundamentally on the experience and expertise of the TELEBRAS management.

The Brazilian Government, as TELEBRAS' chief shareholder, might prefer to review TELEBRAS' strategic plans in the confines of TELEBRAS' boardroom. However, as regulator of a telecommunications sector that is likely to have new entrants and become increasingly competitive, the Government might well hope to draw upon the comments and expertise of users and potential competitors to TELEBRAS and rely on more transparent and less closed procedures.

The Brazilian Government thus faces a major challenge in devising a new structure of governance of TELEBRAS' future business activities. Such a system of governance will, moreover, be a subject of vital interest and concern to potential new foreign or private sector investors in the Brazilian telecommunications sector. The Brazilian telecommunications sector may simply be incapable of attracting new and essential investment without a crystal clear delineation of the future entrepreneurial and regulatory ties between TELEBRAS and its affiliates and the Brazilian Government.

Brazilian regulators will have to deal with a bewildering array of additional issues including (1) defining the distinction between public and private services, specifically delineating the precise services that can be offered by private sector service providers; (2) establishing the ground rules for TELEBRAS' role as a provider of private services; (3) formulating competitive safeguards to assure fair competition between TELEBRAS and new entrants; (4) devising procedures for assuring inter-connection between new service providers

and TELEBRAS and its affiliates; (5) developing accounting systems and cost allocation rules for determining whether TELEBRAS' access services and other services are reasonably related to their costs; (6) structuring transparent schemes for distributing intercompany subsidies to support the expansion of the telecommunications network; (7) overseeing the restructuring of TELEBRAS' local exchange and inter-exchange prices while maintaining some ongoing means of price regulation, including perhaps some scheme of price cap regulation; (8) assuring that TELEBRAS is operating as efficiently as possible and is not acquiring plant and equipment at inflated prices; (9) establishing a scheme for dealing with disputes and controversies resulting from the opening up of competitive opportunities in certain parts of the telecommunications sector; and (10) guiding the process of reorganization of TELEBRAS and finding mechanisms for consulting with, and drawing on the view of, new competitors and users of telecommunications services.

6.3 Some Approaches to Generating New Sources of Investment in the Telecommunications Sector: A Proposed Package of Sectoral Initiatives

Set forth below are some very preliminary notions about how additional investment funds might be attracted into the Brazilian telecommunications sector. These preliminary notions center around (1) the utilization of a scheme of lease-back financing to attract new direct foreign investment into the telecommunications sector; (2) the development of an overlay network of local exchange and interexchange transmission facilities that would be based on restructured pricing arrangements, financed through new direct foreign investment and subject to a new, more competitive regime; and (3) a separate initiative to develop private satellite networks with options for interconnection to the public switched network on a limited basis and for use by EMBRATEL or TELEBRAS for the provision of public communications services in rural areas.

6.3.1 Option for Lease-Back Financing of Telecommunications Infrastructure. The key elements of a proposed approach to lease-back financing for Brazilian telecommunications infrastructure can be summarized as follows:

In view of limitations on the amount of direct investment imposed by Brazilian law on TELEBRAS and its affiliated companies, it might be possible to create a separate corporate entity to finance investment in new plant and facilities. Such an entity would not be directly involved in the operation or provision of any telecommunications services. It would merely plan, finance, own, and perhaps install new local exchange, tandem or interexchange switching or transmission facilities. These facilities would be leased to TELEBRAS or to TELEBRAS operating companies which would be actually responsible for the provision of telecommunications services to the public.

It is likely that such finance entities would initially have to be capitalized through direct foreign investment. Investment might initially originate from foreign equipment suppliers; however, the objective would be to structure an investment vehicle that would be broadly attractive to foreign institutional investors. An effort would thus be made to establish a marketable equity security in the infrastructure financing entities.

It is apparently not likely that Brazilian investors would have access to sufficient liquid funds to be first phase investors in the new financing entities. However, it might be possible to sell, in parallel with securities sold to foreign investors, options to Brazilian investors to acquire the equity stake held by foreign investors by a certain time and at designated option prices. The option terms might include a "safety net" price to allow foreign investors to disengage significant portions or all of their capital by a certain date. In addition, foreign investors might be afforded an upside option price that might be tied to the price of publicly traded securities of TELEBRAS or any of its operating companies. Thus, the foreign investor would own a type of "parallel" or "shadow" equity interest in TELEBRAS or a TELEBRAS-affiliated entity and could participate in the economic benefits that might accrue from new infrastructure investment and other restructuring initiatives undertaken by TELEBRAS.

The option scheme would assure that a heavy infusion of foreign investment could be viewed as a short-term measure and that Brazilian investment and control would in the long term be assured. It might also be possible to allow for the conversion of shares in the financing entity into shares in TELEBRAS or an operating subsidiary in the event that direct privatization is ever authorized or permissible.

This financing scheme would not depend on direct commercial bank lending or on direct lending by the World Bank or other national or multilateral development agencies. It might, however, be necessary to structure a set of investment guarantees to assure foreign investors of the viability of a "take-out" option at the safety value price.

Direct investment guarantees would also have to be accompanied, in all likelihood, with other guarantees provided by the Brazilian Government with respect to the viability of terms and conditions of the lease agreement between the financing entity and the operating entity. It might be necessary, as well as useful, to assure that the Brazilian Government had put in place an overall framework for the regulation and governance of TELEBRAS, as discussed above.

Though the financing entity might be structured to have merely a passive role, it might also take on certain operational functions not inconsistent with any requirements imposed by the Brazilian Constitution. It is possible, for example, that the facilities might even be managed by employees of the parallel financing entity, so long as it was clear that ultimate responsibility for the provision of final services to the public remained in the hands of a state-owned operating company. In this way, it might be possible to shift various key functions into a new entrepreneurial and business setting and institute new work rules and management practices.

In principle, it would seem that the new entity could actually be a provider of private communications services utilizing new infrastructure facilities. In fact, in the event that restrictions on privatization were ever relaxed, the role and functions of the state-owned operating company could be shifted to the new entity that could become a full-fledged operating entity. The proposed new institutional arrangement thus provides a structure for "shadow" or "bottom up" privatization.

6.3.2 Financing an Overlay Network. The lease-back financing mechanism might, in fact, be utilized to finance a new overlay network as. This network might merely have a separate existence as a marketing vehicle. Alternatively, it might be a physically discrete set of facilities provided through a separate corporate structure.

New sources of lease-back financing would be keyed to the implementation of restructured pricing arrangements for the overlay network. Local and interexchange services would be increased; reduced international calling rates would be provided as part of the pricing package.

The overlay network would be engineered to address congestion problems in key exchange areas and over selected interexchange routes. New investment would be centered on increasing tandem switching capability and perhaps on accelerating EMBRATEL's current plans for additional investment in fiber optic links among major urban centers. Pricing arrangements would be structured to stimulate demand and traffic growth over selected routes required by users of the overlay network.

Rigorous cost accounting and profit reporting systems would be put in place in connection with the installation of the overlay network. EMBRATEL's use of local operating company facilities would be exclusively on the basis of cost-based access rates. These tariffs would be implemented even prior to more far-reaching restructuring of the current division of revenues formula among the TELEBRAS companies. The effort to structure new tariffs should assist in the process of overlay tariff restructuring.

Use of the overlay network for competitively provided value added or managed network services would be explicitly encouraged.

Restrictions on access to foreign provided telecommunications equipment or software necessary for the development of the overlay network would be liberalized on an accelerated basis and made a condition of any overall regulatory guarantees provided by the Brazilian Government.

6.3.3 Developing New Satellite Networks. As a more modest alternative or addition to the option of financing a terrestrial overlay network, new financing techniques might be utilized to encourage the development of satellite networks for the provision of public and/or private services.

Limited interconnection to the public switched network for a restricted set of called parties could be permitted. Appropriate access fees or other arrangements would be made to increase the utility and accessibility of such new satellite networks. With limited options for interconnection, such satellite networks might be utilized as a platform for marketing various specialized value added or managed voice/date networks.

Policymakers could explore options for allowing EMBRATEL or TELEBRAS-affiliated entities to utilize privately owned satellite stations to provide public telecommunications services in remote areas.

6.3.4 Overall Observations on Proposed Initiatives. As a general proposition, the various proposed initiatives reflect an effort to structure a package of proposals that might be potentially intriguing to a variety of different interests on the Brazilian telecommunications scene.

Clearly, EMBRATEL and TELEBRAS are keen to identify new sources of investment capital and to confront crucial questions concerning the future role of Brazilian regulators. What is potentially interesting about the proposed initiative is that it buttresses the Government's proposal to restructure and reorganize TELEBRAS, but it does not require that process to be completed before the new financing initiative could be implemented. In fact, the investment proposal allows Government regulators a concrete opportunity to develop new cost accounting systems and to structure new access charges and subsidy mechanisms.

From the users' standpoint new services and new infrastructure would be put in place on an accelerated basis. Though the initial scope of the overlay network might be narrow, the objective would be to expand progressively the exchanges and the interexchange routes served. The new initiative has, as central features, a commitment to liberalize the terms and conditions under which value-added services could be provided, although liberalization of such services should clearly not wait or be conditioned on a decision to proceed with an overlay network initiative.

For Brazilian bankers and financial institutions, there is clearly a unique opportunity to structure novel mechanisms for attracting new investment into the telecommunications sector. More broadly, such a new financing initiative may provide a unique opportunity to demonstrate how private capital can be marshalled to finance infrastructure in other industry sectors.

With pent-up demand for 10 million lines for basic telephone services, with restructured cost-based pricing, with clear delineation of future Government regulation, with separate entrepreneurial vehicles and accounting systems to report costs and revenues, there is every reason to hope that Brazilian investors --even those who have lost confidence in the capacity of the telecommunications sector to deal with inadequate investment resources for the past decade--will follow the lead of foreign investors and take an equity stake in the new infrastructure financing vehicles.

APPENDIX A

AN ANALYTICAL FRAMEWORK FOR PUBLIC POLICY ASSESSMENT

This chapter outlines an analytical framework for assessing public policy alternatives in the telecommunications industry. It seeks to provide a theoretical perspective on the economics of regulation and privatization that will underpin our assessment of government intervention through ownership and regulation in the Brazilian telecommunications setting.

In a wide variety of circumstances, the competitive process provides an incentive system that impels private firms to behave in a manner that is broadly consistent with efficient resource allocation. However, such circumstances do not always hold, and in some industries the forces of competition are weak or nonexistent. There is then a need for regulatory policy to influence private sector behavior by establishing an appropriate incentive system to guide or constrain economic decisions. This need has arisen in the telecommunications industry, where market failures due to natural monopoly and various kinds of externalities have been central issues.

In practice, regulatory mechanisms do not and increasingly cannot ensure that production is cost-efficient and that prices reflect concerns of allocative efficiency and social equity. It is argued that the costs of inefficient regulation may in some instances exceed those entailed in allowing exploitive monopoly to set prices freely.

A.1 Regulation

Regulations are general rules or specific actions imposed by administrative agencies that interfere directly with the market allocation mechanism or indirectly by altering consumer and firm demand and supply decisions. Price controls, property rights regulations, and contract rules represent administrative actions which constrain market allocation. Emissions limits on automobile exhaust and insurance purchase requirements exemplify direct regulation of consumer choices. Restrictions placed upon product characteristics (such as quality, durability, and safety) and on the inputs, outputs, or technology of firms are all regulations that affect the firm's demand and supply decisions.

Nearly in every circumstance, government intervention in the form of regulation has been defended by its proponents on the basis of allegations of market failure (the presence of conditions that are not conducive to an efficient allocation of scarce resources).[16] It is claimed, for example, that in some industries the forces of competition are weak or nonexistent and unregulated markets would necessarily perform suboptimally relative to some social welfare function (usually representing the sum of consumer and producer surplus). Regulatory policy is therefore needed to guide and control private sector behavior, and ultimately to replicate the consequences of effective market

[16] See Breyer (1981) for a comprehensive list of the sources of market failure.

forces, given that competition is insufficient to ensure optimality. That is, regulatory intervention by establishing an appropriate incentive system would induce or compel an industry to perform as it would if effective competitive pressures were available.

It has long been recognized by economists that even in the best of circumstances, market forces work imperfectly in urging the economy toward efficiency, and there are many instances in which we simply cannot count on the market to effect its discipline. From the purely economic perspective, therefore, government intervention can be justified if there is a market failure, and the intervention has a reasonable chance of correcting it. However, most regulatory schemes seem to have been based on undue skepticism about competition and undue optimism about the ability of government to improve efficiency through regulatory intervention. Indeed, it has been argued that the areas in which technical considerations make natural monopoly (the most important source of market failure) a likely or a probable outcome are fairly limited; and that the main threat they pose to the preservation of a free economy arises from the tendency of regulation, introduced on this ground, to assert ancillary powers, thereby to expand its jurisdiction, often with dysfunctional consequences, and spread to situations in which it is not justified. Also, the administration of the various regulatory systems has proven highly controversial; serious doubts have arisen about the efficacy of regulation, and whether the regulatory "cure" is worse than the "disease".

Over the past decade, substantive steps towards total deregulation of some markets and less comprehensive regulation of others have been taken in many countries around the world. While the most dramatic manifestations of this deregulation revolution have been in industries with competitive market structures, a major reassessment of regulatory policy in industries with natural monopoly (or tightly oligopolistic) characteristics has also taken place. The main impetus for regulatory decontrol was provided by the increasing recognition that government intervention imposes substantial economic costs--it discourages investment in innovation, shelters inefficiency, promotes misallocation of resources by inducing departures of prices from marginal costs, causes incentive breakdowns and non-minimum cost behavior, engenders wasteful competition, and reduces the price and quality options that the public would be offered under unfettered market allocation. In addition, developments in the theory of industrial organization facilitated the formulation of policy which permits a much greater toleration of factors that make for natural monopoly while at the same time lessening the need for public intervention.

Recent intellectual developments call for a major reorientation of the traditional regulatory rules and procedures. They offer two types of guidance to regulatory policy makers. First, they provide an improved set of criteria distinguishing between those cases in which intervention by the public sector is warranted and those in which it is not. Second, they establish an improved set of guidelines for appropriate government intervention in the structure and conduct of firms in those cases in which intervention is called for, i.e., they

offer more effective tools to the regulator that increase the public welfare effects of intervention.[17]

The need for regulatory scrutiny has been increasingly called into question in markets with low entry barriers even when they exhibit substantial attributes of natural monopoly--it has been plausibly argued that potential competition for the market can constrain market power almost as effectively as would actual competition within the market. In readily contested markets then, the costs and inefficiencies that regulatory intervention normally gives rise to are increasingly seen as offering little or no offsetting benefit. In most regulated sectors, rate-of-return or cost-of-service regulation has been the predominant form of governmental control over potential monopoly abuse. However, both theoretical reasoning and regulatory practice suggest that this regulatory system suffers from several serious defects. Most notable among these are the lack of incentives on the part of the regulated entities to minimize their costs and the high direct administrative costs of enforcement--the application and enforcement of policies and rules under this regulatory scheme is a resource intensive activity for both the regulator and the regulated firm. The search of ways to promote efficiency in the traditional regulated sectors has shifted attention to "incentive regulation" approaches, which condition financial rewards or penalties upon some measure of the regulated entity's performance.

Telecommunications is a prime example of an industry where the public utility concept provided the intellectual foundation for economic governance. Until recently, in most countries, the primary guarantor of good performance in this sector was conceived to be not competition but direct governmental prescription of major aspects of its structure, behavior, and performance. However, recent technological and economic developments have greatly reduced the justification for continued regulation. New technologies, both in switching and transmission, have almost totally eliminated the natural monopoly forces in interexchange markets and are in the process of doing so even in local exchange. These same developments have also greatly increased the cost of the distortions in economic incentives that arise in a regulated environment. Consequently, although local exchange telecommunications retains many of the characteristics of natural monopoly, advocates of deregulation argue that regulatory policy in this industry ought to be guided by a competitive industry paradigm. In addition, regulatory reform strategies in telecommunications have increasingly focused on alternative approaches to traditional rate-of-return regulation which, at least in principle, promote a more efficient investment in cost reduction. Among these, the model offering the greatest promise is regulation by "price caps" under which ceilings are imposed on the carrier's service rates. These ceilings would be periodically adjusted to reflect easily observable changes in costs generally lying beyond the carrier's control.

A.1.1 The Economic Rationale for Regulation. Two main theories have been proposed to explain the observed pattern of government intervention in the market. One is the *public interest* theory which holds that regulation is supplied in response to the demand of the public for the correction of

[17] See Baumol et al (1988), ch. 16.

inefficient or inequitable market practices. The second is the *capture theory*, often labelled the *economic* theory of regulation to emphasize that it focuses primarily upon the income-distribution consequences of regulatory processes and the incentives facing regulators.[18]

a. Public Interest Theory

Almost in every circumstance, the adoption of regulation has been justified by its proponents on the basis of allegations of market failure. It has been argued that in some industries the conditions under which competitive market allocations are Pareto efficient generally fail to hold, and that government ought to undertake actions to improve the efficiency of their poorly functioning markets. Consequently, market power (natural monopoly), externalities, and to a lesser extent informational asymmetries, the three most important sources of market failure, are the standard normative rationales for public intervention in the market.

Natural Monopoly. Under a variety of circumstances the forces of competition are weak or nonexistent and unregulated markets would necessarily perform suboptimally relative to some social welfare function (usually representing the sum of consumer and producer surplus). This is particularly relevant where there are global economies of scale, giving rise to natural monopoly. Market power is detrimental to economic efficiency for several reasons. First, allocative efficiency is undermined when the number of incumbents in a market is few because of the incentive of the dominant firms to charge prices significantly in excess of the marginal costs of supply. Second, the lack of competitive stimulus blunts incentives for dynamic and productive efficiency.

An industry or activity is termed to be a natural monopoly when the cost minimizing structure of production calls for a single seller or entity (long-run average costs are declining over the entire range of a given market as determined by the relevant portion of the demand curve). A good or a service, therefore, could be produced at lowest cost only if supplied by a single firm, but such an arrangement would normally give rise to monopolistic abuse and dead-weight loss in an unregulated market.

By definition, under natural monopoly a single firm on the supply side is required for cost minimization. However, any firm that is the sole producer of some good or service generally enjoys monopoly power, that is some degree of control over price. If other goods or services are good substitutes for the outputs of the firm, its monopoly power will not be significant. But if a monopoly produces goods or services for which there are no close substitutes, its demand is likely to be relatively insensitive to the prices it charges. In such cases, the firm's monopoly power is substantial, and it will likely charge prices that are well in excess of costs. Such prices can have sizable adverse effects on the efficiency with which scarce resources are employed. By reducing allocative or economic efficiency, prices well in excess of costs impose losses on the nation as a whole.

---

[18]See Stigler (1971), Posner (1974), and Peltzman (1976).

The natural monopoly problem then, motivates consideration of special control strategies. Regulation has been proposed as a means to capture the efficiency advantages of monopoly while eliminating some of the monopoly abuse. Under the orthodox assumptions of monopoly profit maximization, an astute program of price controls can bring about salutary results. There is a potential gain from controls that would force prices down to the level of costs; lower prices and increased output can obtain simultaneously. The size of the gain depends on both cost and demand conditions; it is generally greater the less responsive is demand to prices.

Regulation of natural monopolies also rests upon another social objective--a fair distribution of income. The high prices charged by an unregulated monopoly lead to supranormal profits (the standard is the profit rate earned by firms in competitive markets), and hence, are considered by many as having undesirable income distribution consequences--they effect income transfers from buyers to the seller. Such excess profits are potentially larger, all else equal, the smaller the effect of price changes on demand. It is therefore sometimes held that the purpose of regulation of natural monopoly is the protection of buyers against excessive charges that translate into supranormal profits. Indeed, it has often been argued that the historical emphasis in regulatory rate-making has been on the "fairness" of rates rather than whether rates are economically efficient. Controls that enhance economic efficiency also tend to reduce profits below uncontrolled levels. The reverse is not true. A control strategy that focuses only on the level of profits earned by a natural monopoly does not necessarily enhance economic efficiency. Profits can be reduced by allowing costs to rise, or by forcing some products to be sold below cost; both actions would waste scarce resources. To deal effectively with the special economic problems posed by natural monopolies, control mechanisms must focus on the efficiency of resource use directly and not limit attention to the level of profits.

Externalities. A second form of market failure which militates for public intervention is the presence of external effects and public goods. These arise when economic agents impose costs on, or deliver benefits to, others who are not parties to their transaction. One of the basic conditions underlying the optimality of marginal cost pricing is that prices must reflect all the (marginal) costs of production and consumption--not only those borne by the transacting parties but also those that may be imposed on outsiders. If an external cost is not borne by the responsible party, then its marginal cost will understate the true opportunity cost of the transaction, and there will be an overproduction of the good or service. Similarly, when the external benefits of a particular economic activity are not appropriated by or do not accrue to the transacting parties, the effect will be an underallocation of resources to that activity.

Externalities are especially pervasive in the public utility sector. Under a wide variety of circumstances in these industries, the total benefits that society derives from the continued provision of their services exceeds what can be collected from their several customers at prices equated to marginal cost.

Imperfect Information. Imperfect information has been the primary rationale for regulating consumer products and workplaces. Information is a "commodity" which

is of critical importance in making product, service, or occupational decisions. Costly, complex information can lead to poorly informed and at times potentially hazardous decisions. In many contexts, information about specific products is produced jointly with the products themselves, so that the product supplier is the least-cost source of product information. Yet, product suppliers may not be credible sources of information given the incentive to provide only favorable data to buyers in the product market. Imperfect information can lead producers to supply suboptimal levels of quality, and industries to adopt inefficient technical compatibility standards.

When there is imperfect information, there is almost always scope for government intervention. Regulation can induce two types of efficiency gains. First, by increasing the supply of information, it can reduce uncertainties about the consequences of market decisions. Second, by mandating that certain types of information be provided and by setting minimum standards, it can help buyers evaluate the information that is being supplied and protect uninformed participants against bad outcomes.

Two additional rationales for regulation that are also frequently advanced are of more debatable economic validity. These are destructive competition and scarcity rents.

Destructive Competition. In some industries that suffer from chronic excess capacity (because superior substitutes have appeared on the scene) or alternatively are subjected to sharp cyclical or random fluctuations, competition can have cutthroat and destructive propensities. When firms' cost structures include a high proportion of fixed costs that are sunk, there is a strong inducement toward price cutting during recessions--competition is likely to drive prices down to levels that yield investors much less than a normal return on their capital. It is standard practice for the afflicted (and also at times for well-meaning outsiders) to urge that such industries be granted immunity from the rigors of competition through government-sponsored price-fixing programs.

Scarcity Rents. Scarcity rents in the form of "windfall profits" may occur as the result of a sudden increase in a commodity's price, benefiting any firm that has a pre-existing stock in the commodity or controls a low cost source of its supply. Because scarcity rents have undesirable income distribution consequences, there may be demand for regulation that seeks to transfer allegedly huge and undeserved profits from producers of the scarce resource to consumers.

b. Capture Theory

The public interest theory is premised on the assumption that the purpose of regulation is the enhancement of economic welfare via improved efficiency in resource allocation, and that the regulatory agencies faithfully pursue the implied allocative objectives. The capture or economic theory of regulation explicitly challenges these assumptions. This theory is intended to be non-normative; it seeks to explain how particular forms of regulation emerge and change by evaluating the gains and losses implied by alternative institutional arrangements for the various interest groups involved.

The economic theory of regulation is based on a simple but important insight. Since the coercive power of government can be used to provide valuable benefits to particular groups, economic regulation can be viewed as a product whose allocation is governed by laws of supply and demand. The interpretation of regulation as a product allocated in accordance with the principles of supply and demand directs attention to factors bearing on the value of regulation to particular groups; other things being equal, we can expect a product to be supplied to those who value it most.

The proponents of capture theory claim that regulatory policy has a widespread tendency to protect certain well-organized economic interests, most commonly the industries that are regulated. They observe that the producers subjected to regulation are generally much better organized and able to manipulate the political process than consumers. Therefore, the main beneficiaries of much regulation are likely to be the producers and not the consumers. This can happen in two main ways. First, producers may work through their legislators to have laws passed that correct what they perceive to be a pressing problem. Sometimes the problem is alleged destructive competition. Or it may reflect producers' desire to avoid spoiling the market through excessive new entry. Second, even when legislators have only the public interest at heart in passing regulatory laws, those who are being regulated end up as important beneficiaries by "capturing" the agency regulating them. Regulatory agencies are established for "public interest" purposes, but subsequently they become the tools of the industry they regulate. This happens because: the regulated enterprise has superior technical knowledge upon which regulatory agency staffs come to depend (stated differently, the information needed for imposing controls is frequently only available from the regulated firm); and the regulated firms can use their political influence to have friendly regulators appointed.

One distinctive difference between public interest and capture theories is that the former requires efficient pricing and use of labor, whereas the latter predicts that labor, as an organized group, will benefit from regulation. Trade unions may align themselves with management on such issues as pricing, hoping to appropriate some of the rents in the form of higher wages. Consumers tend to be less well-organized as a lobby group than either management or labor.

A.1.2 The Control of Natural Monopolies and Economic Efficiency. There are four principal requisites of efficient natural monopoly performance: prices based on marginal cost, appropriate product selection, efficient production, and zero economic profits on average. All four of these conditions must be satisfied for performance to be fully efficient. A good social control structure must, therefore, induce at least adequate performance along all four relevant dimensions.[19]

Marginal Cost Pricing. The central policy prescription of microeconomics is the equation of price and marginal cost. Thus, a key requirement for efficient resource allocation, in natural monopoly industries as elsewhere in the economy, is that prices be based on marginal or incremental costs; they should reflect the

[19]This section follows closely Schmalensee (1979), ch. 3.

actual costs that would be incurred as the result of increases in demand, not some measure of the average historical cost of meeting historical demand levels. Only then do the prices that influence demanders' decisions reflect the costs that those decisions impose on suppliers and thus on society as a whole.

Regulated monopolies normally offer a variety of products or services with different cost and demand characteristics (long-distance calls, for example, are not the same commodity as local calls, and even local calls may entail different costs depending on whether they involve urban or rural subscribers). To the extent that economic efficiency is an important goal of regulation, the structure of prices should be the central focus of regulatory attention. Real world regulators, on the other hand, are typically motivated and influenced by considerations of equity or fairness rather than efficiency. Thus, they tend to depart from the marginalist pricing principles despite the substantial efficiency costs that such departures may give rise to. It is standard practice, for example, to impose uniformity in basic residential telephone rates even though the costs of serving rural households are generally greater than the costs of providing service to urban customers.

The focus on the structure of prices is especially critical under natural monopoly. If average total cost falls persistently with increased scale, marginal cost must be continuously less than average cost. In that case, if the regulated monopoly is forced to charge a single market-clearing price equal to marginal cost, it will run at a loss. Authorizing a uniform price equal to average total cost allows the firm to break even, but it causes allocative inefficiency--the marginal consumers who would buy at a price covering marginal cost choose not to consume at the higher average-cost price. The standard escape from this dilemma is some system of multiple and usually discriminatory prices.

Complex multipart price structures may be authorized not only to reconcile marginal cost pricing with covering full costs under natural monopoly, but also to subsidize certain classes of customers deemed worthy of special treatment. However, a discriminatory price structure that solves one set of problems can create others. Customers paying discriminatorily high prices are likely to search for ways of easing their burden. They usually solve their problem by turning to firms that engage in "cream skimming", i.e., firms that specialize in serving the high-priced product or service segments. In the telecommunications industry in the United States, for example, independent companies such as Microwave Communications Inc. (MCI), had entered the market by initially offering specialized intercity telephone and data transmission services to business users, leaving to the Bell System the low-volume traffic.

Perhaps the most important element of the rate structure problem is peak-load pricing. When a utility's product is economically non-storable and demand fluctuates over time, non-uniform utilization of capacity is likely to result. Satisfying additional demand at times of congestion may ultimately call for construction of additional capacity. In these circumstances, the long-run marginal cost should properly include capital or capacity costs. Given that the necessity for capacity expansion is imposed by the customers at the peak hours, economic efficiency dictates that such customers be charged a price that reflects the incremental capacity costs. Using a "peak-load pricing" policy to discourage

consumption in peak periods and encourage off-peak consumption can improve capacity utilization.

Product Selection and Quality. Under natural monopoly, the tendency of costs to continuously decline with the output of any single product and the limitation to one producer, may impose significant restrictions on the array of products that can be produced economically. The choices made by monopolists with discretionary control over aspects of product quality may prevent consumers to directly reveal through their market behavior their preferences and willingness to pay for increments of quality. Utility investment and other quality-related decisions then acquire certain public good characteristics. Unfortunately, fully optimal solutions to the collective choice problems that are intrinsic to situations involving public goods are very difficult to obtain.

In instances where price is fixed by law or long-term contract, the firm has generally an incentive to degrade quality. If, on the other hand, quality is capital intensive then the regulated firm may have strong incentives to provide high-quality products. Firms, for example, may enhance their profits by choosing excessive reliability. Excess reliability can also be useful politically by protecting both regulators and regulated firms from the strong public outcry that normally follows a major service outage. From the economic efficiency point of view, however, excess quality in no more desirable than deficient quality.

Cost Minimization. A critical prerequisite for overall economic efficiency is the minimization of the total cost of providing goods and services. Conventional wisdom holds that in the natural monopoly context, a little production inefficiency can do more harm than a lot of irrational pricing. In the short-run, output must be produced at minimum cost from existing facilities. In the long-run, investment must be made at appropriate times and in appropriate amounts, and new technology should be developed and adopted at the optimal rate.

Rate of return regulation is the predominant form of public utility regulation around the world. The ruling principle has been that of conferring a fair return upon the fair value of the property being used. Concretely, this entails establishing a rate base reflecting the value of the regulated firm's assets and authorizing prices sufficient, after noncapital costs are covered, to let the firm realize some specified rate of return on its assets. An effort is normally made to set the allowed rate of return high enough so that the regulated firm can raise additional funds, if they are needed, in capital markets.

From this essentially cost-plus orientation some important problems generally arise. For one, utilities failing to keep their costs at minimum feasible levels can be reasonably confident that prices will nevertheless be set high enough to cover their costs and provide a return on capital. Thus, management in protected situations may fail to pursue production efficiency, and may not resist vigorously union demands thereby permitting workers to earn "excess wages". Also, when the allowed rate of return exceeds the market cost of new capital, profit-maximizing firms may have a systematic incentive to invest inefficiently in capital equipment--e.g., by choosing excessively capital intensive production processes or building peak-load capacity whose unit cost exceeds the probable value of the service provided.

Limitation of Profits. Economic efficiency requires that if capacity is not to be contracted, profits should be limited to the amount necessary to attract needed capital. A natural monopoly, therefore, should earn zero economic profit on average or, alternatively, its actual rate of return should equal its cost of capital funds on average.

It should be emphasized that the fundamental problem of natural monopoly is not related to potential excess profits but rather to potential economic inefficiency; and that the primary goal of control of natural monopoly is not the capture of monopoly profits but rather the prevention of inefficient resource use. Economic efficiency is generally enhanced by marginal cost pricing. However, as noted above, in the classic natural monopoly case where the average cost declines persistently with increased scale, marginal cost pricing would give rise to negative economic profit.

One way to remedy this negative profit condition is to impose marginal cost pricing and compensate the monopolist for the resulting deficit through general taxation. But such taxes normally impose distortions and efficiency losses elsewhere in the economy. In addition, with such a subsidy the adverse income distribution effects associated with monopoly are compounded. If the enterprise's deficit under marginal cost pricing exceeds the value that consumers place on its existence, then the enterprise should not exist. But that value, or consumers' surplus is very difficult to quantify with any precision. For these reasons, most policy-oriented economists now seem to accept the desirability in principle of requiring natural monopolies to cover their total costs.

When first-best marginal cost pricing is not consistent with non-negative economic profits, second-best pricing should be adapted to provide cost coverage on average. Nonlinear pricing schemes (in which a buyer's average cost declines with the quantity consumed) and Ramsey pricing (in which the monopoly price exceeds marginal cost by an amount that is proportional to the elasticity of demand) could be employed to ensure that total costs are recovered efficiently.

A.2 Regulatory Failure

The relatively disappointing performance that followed the explosive economic and social regulation of the early 1970s has raised serious doubts about the efficacy of time-honored regulatory solutions to allocative problems and the overall capacity for rational government intervention. In fact, during the 1980s, the creeping recognition that regulation may have engendered more resource misallocation than it cured has led to a dramatic world-wide shift in emphasis from concern for market failure to concern for regulatory failure (more broadly, during the same period, the dismal failure of government interventions to achieve the objective of improving market performance also led to a similar shift in emphasis from concern for market failure to concern for government failure).

The empirical assessment of regulatory intervention reveals quite clearly that in a variety of circumstances the effects of economic regulation deviate substantially from the predictions of "public interest" models (which presume that regulation is supplied to ameliorate market failures and enhance efficiency). Indeed, it has become increasingly clear that in many instances the

costs of regulation, however well intentioned, easily exceed its benefits, and that the public would be better off relying upon unfettered competitive market forces as a regulator despite their acknowledged imperfections.

How Regulation Can Make Matters Worse. Regulatory failure (the extent to which regulation departs from efficiency) arises from a combination of the informational problems that typically face regulators and the complex agency relationships that are inherent in the control structure of every regulatory setting and which typically involve multiple principals and multiple agents. Regulators who are either publicly elected or appointed by elected officials, are both principals (to the firms that they are regulating) and agents (to the government that appoints them or the constituency that elects them). It is widely recognized that legislators typically seek to appeal to public opinion and are frequently guided by short term political pressures while managers are concerned about defending or expanding their business organizations. In the face of such conflicting constraints, regulators must assemble the information needed to determine what the public interest is, and to devise mechanisms for redirecting the incentives of agents (firms) so as to reconcile the policy preferences of citizens with the outcomes of regulatory policy.[20]

The design of regulatory mechanisms in this setting is complicated by problems arising from informational asymmetries between principals and agents, their differing risk preferences, and the incomplete observability of actions and performance of agents. Thus, the difficulty and high costs of monitoring the performance of agents (firms) and the imperfection of the enforcement mechanisms that are at the disposal of the principals (regulators), cause regulation to depart from efficiency. Such regulatory failure is further accentuated by the difficulty of designing efficient incentive systems to pursue the public interest and of securing appropriate information to determine what the public interest is.

The traditional idealistic view of regulation as a cure for market failure has been effectively challenged by those who accurately recognized that in addition to affecting allocative efficiency, regulatory policy can also exert a strong influence on the distribution of rents. The fact that regulators are either elected or appointed by publicly elected officials, raises the possibility that regulatory objectives will tend to reflect interests manifested through an electoral connection. Through this electoral connection contending interests, consumers and producers, seek to exercise leverage in their pursuit of rents. It has been plausibly argued that as between these two main contending interests in regulatory processes, the producer interest most frequently tends to prevail--the political power of industries seeking to exclude entry or to control prices greatly exceeds that of individual citizens. Thus, regulatory policy is seen as exhibiting a widespread tendency to protect certain well-organized interests, namely the industries that are regulated. In the more normal circumstance where several interest groups are represented, regulation becomes a forum among them for creating and dividing rents. It is also important to note that although the redistribution of wealth is a primary element of most regulatory policy, such transfer rarely entails pure cash. Instead, it normally

[20]See Noll (1989) and the references cited therein.

takes the form of an entry restriction (the presumption being that entrants are less effectively represented in the political process than established firms), or a regulated price.

A.3 Competition and Regulation

The public policy dilemma in natural monopoly markets is how to secure the benefits of size without suffering the allocative disadvantages of monopolistic pricing.

A.3.1 Franchising. One potential policy option is to promote *franchising* (*Demsetz competition*), that is competition in the form of an auction for the monopoly.[21] This proposal is based on the explicit recognition that even if competition within the market is not feasible because of the presence of substantial economies of scale, one might have competition for the right to operate in the market. That is, potential entrants could compete for the franchise rights to serve the market. In industries whose products have simple specification (e.g., broadcasting and cable, and possibly local telephone service) Demsetz competition could create opportunities for private operators to outbid and displace public suppliers, thereby significantly enhancing effective competition for the market. In activities that involve substantial physical networks, especially large sunk costs, an optimal policy would call for the facilities to be publicly owned, and for the government to auction off the right to operate the system (local telephone service would be an obvious candidate for this approach).

Franchising is appealing because it restores some of the incentives of the competitive solution while retaining the technical advantages of monopoly. It combines competition and efficiency without any arduous burden for regulators, i.e., it is free of the usual regulatory apparatus and regulation-related incentives for firms to behave in an economically inefficient manner. However, franchising has some serious limitations of its own. To begin with, the bidding for the franchise might be uncompetitive. There might be collusion among the bidding rivals, or alternatively, one bidder (e.g., the incumbent franchisee) might enjoy significant strategic advantages in the competition for the franchise. In that case, Demsetz competition will not be effective--it will not lead to average cost pricing, and consequently, the second best will not obtain. Another source of potential difficulty is contract specification and monitoring. Product or service complexity will, in many instances, lead to contractual incompleteness (the contract between the governmental authority and the bidder would permit periodic redesign and/or volume changes). Because the franchisee is likely to attempt to interpret most of the contractual ambiguities to its own advantage, there will be a need for continuous administration and monitoring on the part of the governmental authority. The consequent continuing contractual relationship, which might entail frequent renegotiation and (possibly) litigation, is likely to be very costly.

---

[21] See Demsetz (1968).

A.3.2 Yardstick Competition. In a variety of circumstances, regulatory intervention is complicated by severe informational asymmetries (e.g., when the regulated firm has a monopoly of information the regulator is relatively uninformed about industry conditions). In those instances, the regulatory mechanism can become a blunt instrument that is insensitive to the basic parameters of cost and demand underlying the industry. As a result, regulation is likely to significantly depart from efficiency. In the face of such asymmetries and incomplete observability of actions and performance, *yardstick competition*, in which regulated units in distinct submarkets are brought into competition by the regulatory mechanism represents an attractive option of regulatory policy. The incentive scheme under yardstick competition is designed so that the rewards of agents (regulated firms) are contingent upon the performance of other agents as well as their own. One natural candidate for the promotion of yardstick competition is the local telephone service in which geographically distinct markets can be easily identified.

Yardstick competition is appealing because it mitigates the inherent informational disadvantage of the regulator (who no longer needs to have a detailed knowledge of the cost conditions in the industry), and restores economic efficiency (e.g., each firm has an incentive for internal efficiency because with its price being dependent upon the cost performance of all other firms, it retains a portion of the surplus generated by its cost-reducing activities). However, for these efficiency results to obtain, the firms must operate in identical environments--a condition that is likely to be violated in most real-world cases. In addition, the beneficial impact of yardstick competition will be clearly frustrated if the firms are able to collude.

A.4 Privatization

A prime objective of economic policy should be to promote and maintain a process of effective competition, with a view to inducing a more efficient resource allocation (in the broad sense that includes static, dynamic, and internal efficiency). Privatization, along with other instruments of microeconomic policy, could contribute towards that goal by altering the structure of incentives and opportunities of decision-makers within firms. However, the achievement of efficiency improvements depends crucially upon the state of competition and regulation within which the privatized entities are to operate. When substantial market power exists in an industry, and especially when firm conduct is subject to detail regulatory scrutiny, then the welfare effects of privatization are equivocal. Government policy should therefore aim at restructuring the organization of public sector activities so as to create conditions for efficient private firm participation.

In the infrastructure industries, where public ownership is extensive, the scope and scale of private sector participation have been constrained mainly by market failure concerns. However, recent advances in economic theory, especially the recognition of the importance of principal-agent effects, and the substantial technological and structural changes in these industries, call for a reassessment of conventional policies and the commonly adopted structures of ownership. The primary concern of policy currently is, how to promote and maintain effective competition through privatization in activities where it is feasible, in the face of related activities that exhibit natural monopoly characteristics.

The publicly articulated rationale for privatization is provided by the common industrial experience of several nations, which reveals quite clearly that the structure of property rights has significant effects upon firm behavior and performance. Private firms around the world, in general, seem to exhibit greater internal efficiency, and in most markets the benefits of private monitoring systems seem to easily outweigh the accompanying potential detriments in allocative efficiency. The demonstrated difficulties of efficiently controlling public enterprises (and their attendant inefficiency, waste, and lethargy of operations) have raised serious doubts about the efficacy of the public ownership solution even in instances where strong propensities for market failure exist due to natural monopoly. Indeed, in the 1980s, an almost universal dissatisfaction with the performance of public enterprises has led to a dramatic policy redirection that calls for the curtailment of the State's role and emphasizes the need to foster private initiative.

It is widely recognized that markets are remarkably effective mechanisms for allocating resources among competing uses and for promoting innovation, productivity, and growth. However, it is also widely, though not universally, accepted that in some industries technological conditions and other unavoidable circumstances render the all-pervasive laissez-faire position (i.e., that the unrestrained market automatically solves all economic problems and that virtually all regulatory intervention constitutes an unnecessary and costly source of economic inefficiency) untenable.

The telecommunications industry has often been cited in the past as exhibiting characteristics that call for public intervention. Concerns about natural monopoly and the network externality have led to the judgement that, in the telecommunications sector, the public interest may be served better by the supersession of the market by an extensive and coherent system of governmental controls. For example, local exchange telecommunications retains many of the characteristics of natural monopoly, even when full account is taken of new technologies. Competitive forces unfettered by regulation in these circumstances would necessarily have substantive detrimental effects on allocative efficiency while free entry could lead to undesirable losses of cost efficiency. Consequently, State intervention was promoted to redress perceived behavioral and structural market failures, and public ownership to secure the benefits of size without suffering the disadvantages of monopolistic pricing.

A.4.1 Privatization and Incentives. The allocation of property rights has significant implications for allocative efficiency in the marketplace and for the internal efficiency of firms because it defines the objectives of the "owners" of the firm (public or private) and determines the systems of monitoring managerial performance. Public and private ownership differ in both respects. Changes in property rights, therefore, affect the managerial incentive structures and consequently managerial behavior and firm performance.

The relationship between management and the recipients of residual profit flows gives rise to a specific set of agency problems. The general agency problem can be characterized as follows. The owner of the firm (principal) seeks to establish a set of incentives which would induce the agent (manager), who does not necessarily share the same objectives, to act in ways that contribute maximally to the principal's interests. The main difficulty in establishing such

an incentive structure can be attributed to the fact that the principal does not have full information about the circumstances and behavior of the agent.

In a private firm, the pursuit by the management of its own objectives is constrained by three groups of participants in capital markets: (i) the firm's shareholders, seeking contractual arrangements with management that maximize their own payoffs; (ii) other investors or their agents, who might purchase the firm's shares and subsequently attempt to alter existing contractual arrangements; and (iii) the firm's creditors, who could seek managerial changes in the event of threatened or actual default. There are other mechanisms that provide incentives for incumbent management to behave in shareholders' interests. First is the market for managers inside and outside the firm--the value of the manager's human capital is likely to depend on the value of the firm as revealed in its share price. Second, management will try to maintain the value of the firm's shares in order to minimize the cost of capital to the firm. Third, privately owned firms can tie managerial compensation to corporate performance through bonuses and stock options.

All of these mechanisms are less effective or nonexistent in the state-owned enterprises. For publicly-owned firms the task of monitoring managerial performance is entrusted to the government. Compared with private ownership, important differences in the relationships between managers and their immediate principals arise, because: (i) the principals do not seek to maximize profits; (ii) their shares are nontransferable, and hence there is no market for corporate control; and (iii) there is no direct equivalent to the bankruptcy constraint on financial performance. Unsatisfactory performance by state enterprises may well go undetected. The lack of a share price exacerbates the monitoring problem and limits performance competition. Managers know that they can avoid the sanctions that come from poor performance. As a result, poor managerial performance will not be automatically reflected in a higher cost of capital. Lack of a share price also makes it unlikely that poor management performance will be perceived in the outside market for management. Finally, state enterprises are severely restricted in their ability to link managerial compensation to financial performance.

Politicians who have the power to dismiss managers, are subject to pressure from more concentrated interests such as customers and employees, who do not want to see profits achieved at the expense of low prices or high wages. The voting public can certainly discipline politicians who fail in their monitoring responsibilities. However, the market for political control is highly imperfect and the incentives for efficient monitoring of public enterprises can, as a result, be rather weak.

Public ownership, on the other hand, provides an effective instrument for correcting failures in the markets for goods, factors, and corporate control. Government monitoring does not encounter the public goods problem associated with dispersed shareholdings, and it can take immediate account of the deviations between social and private returns in goods and factor markets. Under private ownership, vigorous pursuit of profit by a monopolist can lead to a variety of anti-competitive practices that operate against the public interest. The difficulties of devising and enforcing simple tests of anti-competitive behavior may render government ownership superior to regulation of privately-owned firms.

Other alleged advantages of public ownership include the channeling of returns on capital to the commonwealth rather than to a few private individuals, and the ability to raise capital at no risk premium through governmental risk pooling.

The relative merits of private and public monitoring clearly depend upon the trade-off between market inefficiencies and incentive failure. That being so, it cannot be expected that one form of ownership will be superior to the other in all industries and in all countries. Nevertheless, the evidence on comparative performance indicates that the weaknesses of public sector monitoring are so serious, and so pervasive, that a general presumption in favor of private ownership is justified.

A.4.2 Privatization of Infrastructural Activities. The infrastructure sectors encompass several distinct economic activities with different economic characteristics (e.g., a long distance telephone call utilizes local loop facilities providing links to switching centers and trunk facilities that link exchange or toll switching centers). The rapid technological change of the last few decades has generated new and potent competitive forces within some of these activities and has effectively rendered many of the conventional arguments related to natural monopoly almost obsolete (e.g., in telecommunications, natural monopoly has been reduced drastically in the provision of long-distance service). As a result, even within these traditionally public sector activities, the set of circumstances that require no public intervention has expanded significantly.

The question for policy in the infrastructure sectors is, then, how to promote and maintain effective competition in activities where it is feasible, in the face of related activities that exhibit natural monopoly characteristics.

Therefore, the following privatization strategy could be effectively pursued:

Step 1: Isolate those segments of the sector's activities that are naturally competitive, or seem to entail no inherent structural impediments to contestability, from those that exhibit global or extensive scale economies or perhaps are inextricably associated with heavy sunk costs.

The construction of network infrastructure normally entails substantial fixed costs that are largely sunk while the operation of services on the physical network requires no similar irrecoverable investment. Massive fixed costs create natural monopoly conditions, while their high degree of sunkenness severely impedes entry. Such impediments to entry and exit are the primary source of interference with the workings of the invisible hand in physical network provision. The operation of services, on the other hand, is relatively contestable since it involves little (or no) sunk investments.

To the extent that integration economies are not of decisive importance, vertical separation represents a viable structural option (in telecommunications, separation of local exchange from long-distance service might be economically feasible). Such vertical separation represents an effective policy measure, in that it confines market dominance only to those activities where competition is technically impracticable, thereby safeguarding competition in the remaining of the industry's activities.

Step 2: In the naturally competitive segment, all interference with the market mechanism and any truncation of property rights should be ruled out and the scope for introducing competition should be fully exploited, i.e., full privatization is called for; more specifically, all artificial obstacles to contestability (such as government inhibition of entry or other policy-induced constraints) should first be removed, all regulatory intervention eliminated, and after competitive restructuring is effected through horizontal and vertical separation, all activities in that segment should move from governmental to private control.

Step 3: The second segment, where monopoly is unavoidable or substantial amounts of sunk capital are involved, must be regulated or even operated by the public sector.

APPENDIX B

PAST REGULATION OF THE TELECOMMUNICATIONS MANUFACTURING INDUSTRY

The emergence and diffusion of microelectronic technology has profoundly and irrevocably transformed the telecommunications industry. In the past two decades, the adoption of digital, microelectronic technology has altered the nature of telecommunications products, the processes by which they are manufactured, the size and growth of the international telecommunications market, the nature and forms of corporate competition, and the role of government policy in promoting technological change and supporting local equipment makers. The extent of this influence reflects in part the pivotal role telecommunications plays in providing the infrastructure for the information-intensive activities based on microelectronics.

The telecommunications equipment industry is the only major world industry which has undergone almost complete transformation of technology, from electromechanical to microelectronics-based. This almost universal switch in equipment production to digital, microelectronic technology is due to: (a) the greater speed, efficiency, and capacity of digital systems combined with steadily declining costs, and (b) the increasing demand for new information technology (IT) services which depend on digital telecommunications networks.

To fully appreciate the superiority of digital, microelectronic technology and its implications for the Telecommunications Manufacturing Industry (TMI), it is necessary to consider its specific features in comparison to those of electromechanical technology. This comparison is summarized in Table B1.

- Digital exchanges are solid state (no moving parts), meaning they are less susceptible to breakdown and require less maintenance than previous technologies. Microelectronic systems require virtually no technical skills to maintain, in contrast to electromechanical.

- Microelectronic technology is modular in design, having a divisible manufacturing process, making it suitable for smaller scale production than electromechanical technology. This modularity also implies that manufacturing can begin with relatively simple components and progress to more complex systems.

- The microelectronic technology is information-intensive, and the engineering expertise required is concentrated in the conceptual, design phase. For electromechanical technology, on the other hand, intensive engineering and technical skills are required throughout the production process, including equipment assembly, testing, installation, as well as maintenance. Both the human capital (engineering) and physical capital requirements for manufacture are specialized and specific to this type of technology, which has restricted entry. The electromechanical-based industry had a vertically integrated market structure.

Table B.1: Technological Characterization of Microelectronic and Electromechanical Telecommunications

Level of Comparison	Electromechanical Technology	Microelectronic Technology
1. Product/System	- Vertically integrated - Centralized design - Integrated units - Many moving parts	- Horizontally integrated - Modular design - Divisible units - Solid state
2. Manufacturing Process	- Complex/crucial - Intensive fine engineering and electromechanical interfacing - Heavy engineering / capital goods infrastructure - Hardware manufactured in or by specialized telecommunications component suppliers	- simple assembly - Minimal engineering and electromechanical interfacing - Light, clean assembly operation - Hardware purchased from general semiconductor suppliers
3. Technological Capabilities	- Electrical/mechanical - Widely dispersed in production process - Broad range of skills - Telecommunications specific, rigid demarcations	- Information intensive - Centralized in design/ conceptual stage - Narrow range of skill - Converging with other electronics industries
4. Technological relationship with other industries and products	- Industries traditionally separate - Telecommunications-specific skills and knowhow - Product boundaries clearly defined	- Convergence with other microelectronics industries - Increasingly converging information-based skills - Products converging with other IT goods

Source: Hobday (1990)

- The digital hardware is controlled through the software, which allows it to be continuously adapted to new requirements and conditions without physical modification. However, the complexity of exchange software has absorbed a large share of the development costs of the industry, and imposes a high R&D threshold on producers.

Advances in semiconductor technology have led to steadily declining real prices, and large capacity public exchanges are cheaper than similar analog units. Digital exchanges are capable of simultaneously processing large volumes of voice, data, text, and other forms of information in digital format at great

speed and low cost. Falling prices and other advantages of digital exchanges have led to a surge in demand for many new informatics and telematics services. Convergence with computer technology has also produced many new applications and products.

The software design skills which characterize the new telecommunications industry are common to other information-intensive industries. Thus, semiconductor technology has broken down the traditional market structure of the telecommunications industry and allowed entry by new competitors, including firms from traditionally separate industries, such as office equipment, computer, aerospace and microchip component manufacturers. Formerly, collusive arrangements between local manufacturers and government buyers, and heavy capital investment requirements acted to restrict competition. Telecommunications firms are now less able to appropriate technological knowhow in many product areas.

B.1 Origins and Expansion of Brazil's Telecommunications Manufacturing Industry

The first attempt to establish a telecommunications manufacturing capacity in Brazil began in 1952 when the government tried to reduce expenditure on foreign telecommunications imports and persuade the multinational companies (MNCs) to locate manufacturing facilities in Brazil. The government restricted import quotas and insisted on local manufacture and use of local inputs wherever possible, using its monopsony purchasing power for enforcement. At this point there was still no transfer of technology--local equipment manufacture was merely assembly.

The structural reorganization during the 1960s and early 70s of telecommunications services did not substantially affect the equipment manufacturing sector where no planning, coordination, or control was introduced at the same time. MNC investment in this sector took off after 1967. In the manufacturing of exchange equipment, the entire supply sector was dominated by a small number of MNCs with no domestic capital participation. Local subsidiaries did not participate in technology transfer. At the beginning of the 1970s, there was virtually no local Brazilian industry of telecommunications equipment manufacturing, no R&D base and no significant technological base.

The most dramatic changes in telecommunications policy took place in 1974. The Geisel government took a strongly interventionist approach to telecommunications. Through MINICOM, the government committed itself to three main objectives: (a) to accelerate the expansion of a dependable and comprehensive telecommunications infrastructure; (b) to gain ownership and control of the MNC subsidiaries operating within the country; and (c) to build up a government R&D center in microelectronic telecommunications, capable of reducing dependance on foreign technology and fostering the development of local industry.

TELEBRAS assumed financial control over EMBRATEL, to coordinate investments across the regions and remove differences in tariff structure. As early as 1976, policies were introduced to ensure that new investments were based on latest technology; the implicit intention of policy was to leapfrog

intermediate, electromechanical technologies. In 1976, Brazil made the decision to "go digital"; at that time a range of informatics and telematics services were installed using the national telephone or telex network for transmission and switching.

It is worth noting that by making the decision to digitalize telecommunications at a relatively early stage of the sector's development, Brazil experienced fewer barriers to diffusion of the new technology than some older developed countries, for example, the U.K., which was not yet fully committed to digitalization even by 1985. The U.K. experienced resistance to the new technology from telecommunications management and labor (replacing the analog trunk network by digital would have eliminated 80% of the maintenance workforce).

B.2 Diffusion of Digital Technology in Brazil

During the early 1970s, the government of Brazil established the Center for Research and Development of TELEBRAS (CPqD) as the center for R&D in advanced digital telecommunications. This center played a key role in the government's deliberate long term policy to establish a strong national base in digital technology, and became the principle institutional means by which the technology policy of TELEBRAS was carried out. The Geisel government in 1974 changed radically the previous policy of reliance on MNCs for industrial and technological development. The new government committed itself through legislation introduced after 1974 to develop a national base in digital technology, by encouraging wholly Brazilian firms to enter the industry, and reversing the trend of foreign ownership of the industry. Among the extensive legislation and decrees passed after 1974 to govern the telecommunications industry, three stand out.

Law 102 of January 1975 specified the overall policy aim of reducing dependence on foreign sources of technology and increasing local capabilities. MINICOM was given the authority to identify and deploy the existing technological resources of the universities and other government institutes to increase local participation in the development of telecommunications materials, components, and equipment.

In August 1975, Law 661 was passed to define how the Brazilian take-over of the market was to proceed. This legislation outlined the responsibilities of CPqD and established the rules by which TELEBRAS could use its newly granted monopsony power to gain a measure of control over the MNC subsidiaries' equipment production and technology. According to the law, the MNCs were instructed to begin the manufacture of digital programmable exchanges if they wished to remain in the market. Forty percent of the local market was to be reserved for technology produced by CPqD, a share later increased to 50 percent by Law 215.

Law 622 of June 1978 completed and updated the first two laws. It reaffirmed the rules regarding the reduction of telecommunications equipment imports, and introduced rules specifying "nationalization indices of final equipment" (minimum local value of inputs to goods produced by MNCs within Brazil). Under this law, the interministerial group for telecommunications components and materials, GEICOM, which was created in 1975, was empowered to

coordinate the reduction of telecommunications imports and the use of local inputs wherever possible.

In sum, Brazil's policy at this time, reflected a 'three-pronged' approach to building up the technological and industrial base of the country in telecommunications: first, by setting up a major new government-owned center in digital technology; second, by inducing the MNCs to transfer ownership to Brazilian capital and to increase the level of manufacturing and technological facilities within the country; third, by sponsoring the development of new Brazilian companies to manufacture equipment and develop technology. In addition to using Government support of R&D and the new legislation to pursue these policy aims, MINICOM used its monopsony purchasing power to considerable effect.

B.2.1 The Role of CPqD. In 1972-76, TELEBRAS met with existing universities and other research bodies doing electronics-related research to begin planning for the human capital resources required to master digital technology. In 1976, CPqD took over the coordinating role and the responsibility for developing the new digital systems, from basic research to ultimate transfer to industry. Under the new authority of TELEBRAS, CPqd could choose which firms were to collaborate in the design and manufacture of products and, in effect, allocate final market shares to these firms (since by law 50 percent of the local market was reserved for systems produced by CPqD). By this organization, Brazil was able to take over the 'choice of technology' decisions from the MNCs.

By 1976, the conscious decision was made to develop a range of digital, microelectronic systems. This required mastering technology in three areas: switching, transmission, and peripheral equipment. By far the largest program supported by CPqD was the Tropico exchange technology program, absorbing 30-40 percent of CPqD investments (Tropico is a family of digital stored program-controlled exchanges utilizing the most advanced form of digital technology, time division switching (TDS)). The Tropico program is a good example of how CPqD took advantage of the modularity of digital exchange technology to gain experience with small-capacity exchanges and gradually develop larger systems.

Regarding the feasibility and desirability of attempting a large-scale switching development by CPqD, there were intense debates within Brazil in the mid-80s. The international market for central exchange technology is oversubscribed and fiercely competitive, involving very large R&D costs by the MNCs. However, Brazil has fairly low cost local engineering resources. The country adopted a catch-up strategy taking advantage of the massive investments by the MNCs, by imitating basic established designs and improving and adapting them. The rationale for this policy was the belief that developing this capability in Brazil would give long-term technological strength to the local industry and strengthen Brazil's bargaining power with the MNCs, thereby permitting the transfer of large exchange technology to the local firms. Therefore, frontier technology research was not attempted by CPqD, as it was not considered feasible nor appropriate given the enormous costs and risks involved. The strategy was geared towards local technological development where possible given considerations of scale, technological complexity, and cost.

The actual levels of investment by CPqD were modest by international standards. Although by the mid-80s, TELEBRAS' investment expenditures (mostly

directed to CPqD) reached the same order as those of the MNC subsidiaries and local private enterprises combined, they were much less than the R&D expenditures in developed countries. Up to the mid-80s, TELEBRAS' policy was to invest around one percent of operational receipts in R&D, a low share by international standards. Despite this comparatively low level of investment, CPqD is said to have successfully marshalled the human resources and physical infrastructure of the local research community to coordinate the activities of other research centers in digital technology and to transfer the product and process technologies to industry. It is notable that under CPqD, Brazil has become the only developing country to have successfully developed and installed an integrated optical fiber communications system.

The nature of digital technology enabled one institution to centralize technological capacity and authority and to apply these skills directly to product development, with relatively little financial resources. This organization would not have been as effective with electromechanical technology because of the more differentiated and complex processes involved.

It is claimed that, by various indicators of technological progress -- patents, product and process developments, human resources, and technology transfers -- CPqD had by the mid-80s accumulated a significant and independent capacity in microelectronic-based telecommunications. This success was not without economic cost, however (see section below).

B.2.2 Technological Integration of the MNC Subsidiaries. Initially the Brazilianization rules contained in Law 661 were resisted by the MNCs. TELEBRAS threatened to cancel outstanding orders to make them comply with the charge to cease production of electromechanical technology and transfer to microelectronic-based technology. A transfer of voting shares in MNC subsidiaries to large Brazilian financial groups began after 1974. However, the emphasis of official policy was to control the activities of the MNCs, particularly in terms of local technology developments, rather than to necessarily gain complete local ownership of these firms. The monopsony power granted to TELEBRAS was influential in persuading the MNCs to transfer company ownership to Brazilian capital, under the threat of exclusion from the market. In many of these instances, the MNC subsidiaries not only got local voting control, but also managerial and technological control from the parent corporation. Ericsson do Brasil (EDB) to take one example, evolved during the late 1970s from dependence on the parent company to a firm with substantial technological capacity, in response to Government pressure and the need to compete with other MNC subsidiaries.

Following the Brazilian policy changes of the mid-1970s, the MNC subsidiaries have significantly increased their levels of technological activity within Brazil. As evidenced by ownership transfer, local technology expenditures, reduced imports, increased value of local input content, management reorganization and competitive strategies, the policy aims of the government did have the effect of progressively strengthening national controls over the MNCs. However, "the diffusion of microelectronic telecommunications technology to Brazil through the MNC subsidiaries was not automatic, costless or market induced.... The Brazilian government, through careful legislation and use of monopsony purchasing power, created the conditions: the government, rather than

the market, allocated penalties for failure to invest in technology, and rewards for those most successful." (Hobday, p. 166)

Table B.2: Brazilian Telecommunications Industry Production Capacity

EQUIPMENT	# OF MANUFAC.	INSTALLED CAPACITY	NATIONAL PRODUCTION 1977	1979	1981	1983	1985
Public Switching Exchanges	7	1,137,950 Terminals	795,400	695,000	511,971	579,769	497,646
Private switching Exchanges (PBX)(PABX)	8	273,176 Terminals	127,600	156,300	171,395	135,362	150,169
FDM Multiplex	6	66,640 Channels	49,980	26,410	59,800	39,526	38,748
PCM Multiplex	4	92,660 Channels	30,500	27,200	40,190	54,134	43,459
Telegraphic Multiplex	1	3,800 Channels	3,024	3,720	4,600	15,640	23,552
Telex Exchanges	1	20 Exchanges 10,000 Terminals	-	-	-	2	8,992
SHF High-Capacity Radio	4	1,180 Transceivers	388	729	426	445	382
UHF Multichannel Radio	5	3,320 Transceivers	622	541	951	1,132	1,237
VHF/UHF Monochannel Duplex Radio	2	10,500 Transceivers	884	1,368	2,338	2,140	3,960
HF/VHF/UHF Radio for Fixed, Mobile, Portable Use	24	64,324 Transceivers	17,000 (*)	20,750	20,956	18,237	28,245
Mono|Multichannel Subscriber Carrier	2	41,400 Circuits	5,500	14,300	10,930	9,290	5,500
Telex and Facsimile Machines	5	18,073 Units	5,200	7,760	9,926	7,120	6,545
Subscriber's Telephone	7	1,900,000 Telephones	866,570	881,260	1,740,200	922,327	1,184,215
Coin Box Telephone	2	42,000 Sets	9,990	10,160	15,476	24,789	15,100
Key Systems	7	316,220 Sets	112,000	175,200	131,800	108,282	168,472
Telephone Wires and Cables	17	32,800 Tons	14,000	11,000	9,000	9,000	13,200
Loop Amplifiers	4	68,000 Units	9,370	22,220	37,200	2,450	8,993
Data Transmission Modems	10	93,712 Units	-	-	(*)	5,820	46,573

Source: Telecommunications in Brazil, Brasilia: Ministry of Communications, 1988, p. 31

B.2.3 The Emergence of a Brazilian Telecommunications Manufacturing Industry. The Brazilian telecommunications sector experienced a significant loss of resources during the macroeconomic crisis after 1974. The crisis resulted in a cutback in planned investment in telecommunications, which reduced the market for

equipment. During this period of crisis, the MNCs were in a stronger competitive position than the small-medium scale Brazilian firms. Nevertheless, many local companies survived by virtue of continuously upgrading their local technological capability.

By 1983, Brazilian firms accounted for $380 million out of $800 million in total local sales of telecommunications equipment; and they employed 25,000 out of 30,000 workers in the industry. This excludes companies which were mainly engaged in related areas of information technology, and companies which were largely of MNC origin. This outcome compares to the virtual absence of Brazilian participation in TMI a decade earlier.

The apparent success of Brazilian firms in penetrating what was once a rigidly dominated MNC oligopoly reflects four factors: the rapid expansion of demand during the 1970s, which was felt through procurement concentrated in TELEBRAS; the import restriction placed on final equipment manufacturers; the opportunities made possible by the shift to microelectronic-based technology, in terms of divisibility and gradual technological learning; and deliberate technological support to the local industry through CPqD.

B.2.4 Economic Costs of the Policy. Prices of Brazilian equipment were greater than equivalent import prices in most cases. A comparison of the prices of locally produced equipment with those of comparable international goods in 1983 indicated that in nine of eleven cases, the Brazilian equipment price was higher than the international price, substantially higher in seven cases. The total additional cost to Brazil due to the higher prices was $66 million, or about 17 percent of the total sales for which comparative information was available. Despite the higher costs of local suppliers, three other considerations are often cited to justify Brazilian policy: that local manufacture reduces dependence on foreign suppliers; the local equipment industry plays a role in overall progress of telecommunications infrastructure; and the supply industry and service sector have a mutually supportive relationship. These non-price benefits are claimed as justifying government support to the TMI.

In terms of other impacts from the government policy towards telecommunications, it is significant that TELEBRAS made substantial profits in 1972-82 in spite of the relatively low tariff increases, high cost of equipment purchases, and financial transfers from TELEBRAS to other sectors. Its investments were largely self-financed in this period. For the TELEBRAS telecommunications operating system as a whole, labor productivity improved consistently during this period and imports fell. Brazil's commitment to telecommunications infrastructure and to improved technological capacity in telecommunications during this period is judged by some observers to be entirely justified by these outcomes, considering as well that it permitted large improvement in communications capacity of the country and laid the foundations for Brazil to meet the demand of information technology.

B.3 Policy Regarding Related IT Sectors

The Government's policy on information resources, as part of overall industrial policy, had four principal objectives: i) to maximize information resources located in Brazil, whether imported or produced locally; ii) to acquire

and maintain national control over the decisions and technologies relating to Brazilian industries; iii) to broaden public access to information; and iv) to administer information resources in such a manner that they enhance the country's cultural and political environment. These four objectives have led to efforts to build necessary infrastructure for the telecommunications network and related technological capability as discussed above, both through the telecommunications manufacturing industry and the informatics sector which shares the digital technology. The objectives have also shaped policies regarding telematics (the merger of telecommunications and informatics) and transborder data flows (the extension of telematics to the international realm).

The informatics sector in Brazil began with the creation in 1972 of the Coordinating Commission for Data Processing Activities (CAPRE) - a governmental commission to rationalize the use of electronic data processing by government agencies. After four years and the onset of the macro crisis, CAPRE was assigned the task of formulating an industrial policy for informatics. In a similar manner to TELEBRAS, CAPRE was given the competence to manage the import of data-processing equipment and particularly, of parts and components, in the interest of fostering the growth of a national informatics industry.

CAPRE's responsibilities were assumed and extended in 1979 by its successor, the Special Secretariat of Informatics (SEI). This institution framed CAPRE's mandate to cover microelectronics, telematics, and real-time control systems, and defined its strategy as that of enhancing the capabilities of national corporations to manufacture increasingly complex technologies. As part of this policy, foreign affiliates were encouraged to produce advanced computer goods and services in-country and develop local R&D; once a product was manufactured locally, its market was protected through import restrictions.

Although telecommunications and informatics systems in Brazil were reasonably well developed by 1978, their combined use for telematics was still undeveloped; no data communication networks existed in the country. Two Presidential Guidelines--one on telecommunications and other on informatics--established priorities for both telematics and transborder data flows. The general objectives for these guidelines were the same as for the overall policy on information resources (listed above). Attention was given to the creation of an efficient, reasonably priced and specialized telecommunications infrastructure of public-switched networks that would utilize and enhance local capabilities; the development of data bases and data-base services; the promotion of telematics networks and services; and the standardization of data-communication protocols. As a result, data-processing equipment was standardized and made compatible, economies of scale were created for the national industry, the government's market-protection policy was applied to the telematics industries to consolidate infant industries in this area, and national control over data services was fostered. The main telematics projects implemented in Brazil were a result of government initiatives.

The government adopted a regulation on transborder data flows in 1978. The principle objectives underlying Brazil's policy regarding transborder data flows were to maximize the amount of information resources (computers, software, data bases and skills) located in the country, together with some degree of technological and operational autonomy of local affiliates of transnational

corporations. Brazilian policy is based on the principles that international trade in information is an economic resource, is closely bound to national security, should lead to net inflow of information, and should not negatively affect the balance of payments. CAPRE decreed that the establishment of international data-communication links required the prior approval of CAPRE (later SEI) to ensure that the links were in accordance with the national information policy. Contents of messages were not supervised. Such links were to be approved for specific purposes only and for fixed periods of time, normally 3 years.

In 1982, a TELENET node was established to provide an international data-communication gateway to provide specialized international channels for the transport of digital data. The gateway made light-traffic applications for data communication more economic.

The country's transborder data flow policies have resulted in increased location of computers, software, data bases, and skilled human resources in Brazil and more extensive national control over them. Consequently, transborder data flow links are not being used to export information resources, and have contributed to the emergence of a national data industry. Transborder data flow policies were thus used in Brazil as an instrument to support national development objectives, similar to customs/tariff policy in promoting growth of infant industries and local industrialization, and in support of national independence.

APPENDIX C

THE COMPONENTS OF A TELECOMMUNICATIONS SYSTEM

A telecommunications system transmits information from a source (generating agent) to a recipient (receiving agent). It has three principal components. At the ends of the system are *terminal equipment* (telephones, fax machines, graphic displays, etc.). A *transmission system* sends the information from source to destination through a communications channel, or circuit. The communication can be simultaneously or alternatively performed in both directions.

Figure C1 depicts a simple point-to-point communication model.

Figure C1: A simple communication model.

In order to be adapted to the transmission system, the time-dependent *data* d(t) generated by the source must be converted through a process called *signalling* into a *signal* s(t) that matches the characteristics of the transmission medium. The signal is then transmitted through the medium. At the other end of the system, a signal s'(t) is received which normally differs somewhat from s(t). In the final stage, the signal s'(t) is converted by a receiver into the output data d'(t), in a form that facilitates interpretation by the receiving agent. The quality of the converted data d'(t), i.e., the degree of its similarity to the original data d(t), is a function of the characteristics of the transmitter and the transmission channel.

As Table C1 indicates this simple model can be applied to a variety of communication systems. For example, in the ordinary telephone conversation

- the source is the speaker
- d(t) is the voice message
- the transmitter is the microphone
- s(t) is the electrical signal sent on the line
- s'(t) is the received electrical signal
- the receiver is the ear-piece
- d'(t) is the sound produced by the ear-piece
- the recipient is the listener.

Table C1: Application of the model to some communication systems

APPLICATION	GENERATING AGENT	d(t)	TRANSMITTER	s(t)	TRANSMISSION	s'(t)	RECEIVER	d'(t)	RECEIVING AGENT
TELEPHONE	speaker	voice	telephone microphone	microphone signal	telephone network	signal	telephone earpiece	voice	receiver
DIGITAL TELEPHONE	speaker	voice	microphone plus codec	bits	ISDN	bits	codec + earpiece	voice	receiver
TELEVISION	event	image	TV camera TV transm.	TV radio waves	ether	TV radio waves	TV receiver screen	image	spectator
FACSIMILE	editor of documents	image	telecopier transmitter	telephone signal	telephone network	telephone signal	telecopier receiver	image	reader
COMPUTER COMMU-NICATION	computer	bits	modem	telephone signal	telephone network	telephone signal	modem	bits	computer
COMPUTER COMMU-NICATION	computer	bits	coding light emitting diode	light pulses	optical fiber	light pulses	photodiode	bits	computer

Source: Legal and Economic Aspects of Telecommunications, Amsterdam: North-Holland, 1990, p. 99.

In the simple model depicted above, communication takes place between two devices that are directly connected by some form of point-to-point transmission medium. However, in practice, it would be extraordinary costly (though extremely reliable) for every source or recipient of information to have a direct path to every other user. Instead, *switches* are used to route traffic from a local distribution system, through the main arteries or trunks that link large regions, then back into a local distribution system to its final destination. Thus, the solution to this problem is to attach each device or *station* to a communication *network*.

Figure C2 presents a conceptual view of a local and intercity telephone network.

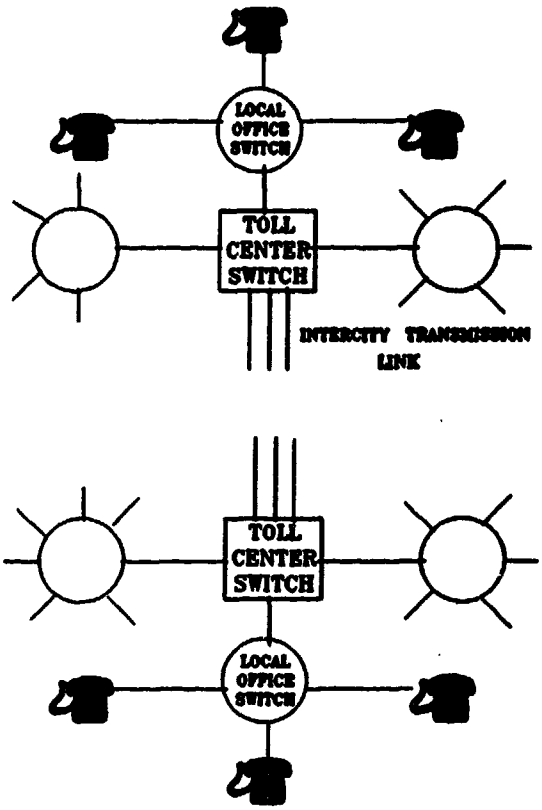

Source: Sharkey (1986).
Figure C2: A local and intercity telephone network.

Each user obtains access to the network through terminal hardware and a wire loop that connects it to the local office. The local office contains a switch that is capable of interconnecting all possible pairs of terminal devices attached to it. After the local office, an intercity call is sent to a toll center switch. The toll switch determines the destination of the call and selects the proper routing among the available open channels. At the receiving destination the process works in reverse order and the call is received at the intended location.

C.1 Transmission Systems

The successful transmission of information depends principally on two factors: the quality of the signal being transmitted and the characteristics of the transmission medium.

C.1.1 Digital vs. Analog Signals. A signal s(t) is said to be *analog* if its time variation is continuous, i.e., there are no "jumps" or discontinuities in its time behavior (Fig C3). Analog signals are very common in nature--variations of physical phenomena, sounds, images, etc. In the early days, all transmission systems were analog sending information in continuous waveforms. The telephone, until recently, was an example of an analog device.

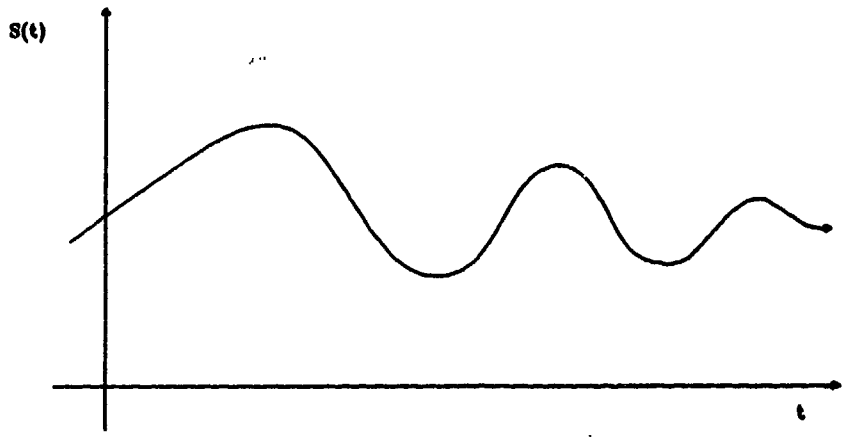

Figure C3: An analog signal.

A signal is *digital* if it takes only a finite number of discrete values. A digital signal, therefore, exhibits discontinuities in its time behavior. Figure C4 depicts a digital signal with four discrete values (0,1,2,3). Digital signals are man-made. Examples include texts, series of numbers, computer data, etc.

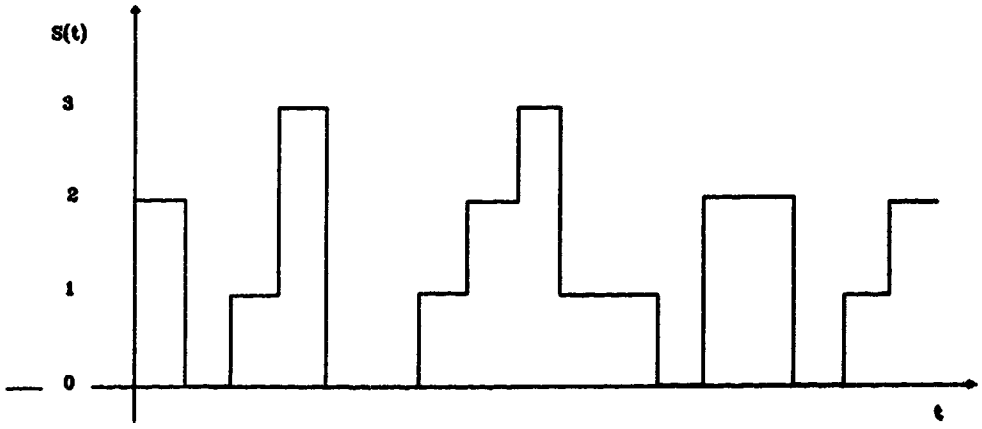

Figure C4: A digital signal.

The *binary* signal is a special type of a digital signal is comprised of a sequence of *bits* that can take only two values, 0 and 1 (Fig C5). Since the 1940s it has been known that all information (voice or data) can be encoded as a sequence of binary digits, that is, any code--numerical, alphabetic, or other--can be represented by some string of binary numbers.

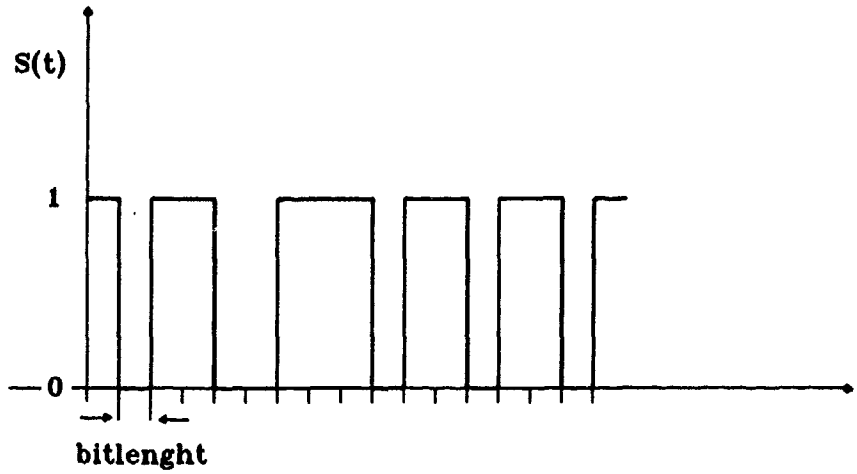

Figure C5: A binary signal.

Digital transmission is not limited to data. It is also used for pictures. Television pictures, for example, are reproduced from the originals as a sample consisting of a large number of dots. In a technically very important development, digital transmission is increasingly replacing analog transmission of voice messages over the telephone; for any voice wave it is possible to sample its frequencies and transmit the sound digitally as thousands of unit frequencies.

The question naturally arises as to which is the preferred method of transmission. The telecommunications industry has given a clear answer to that question. Despite the enormous investment in analog communications facilities, both long-haul and intrabuilding telecommunications services are gradually being converted to digital transmission. Digital transmission has a number of distinct technical and economic advantages. Both the recognition and reproduction of a digital signal are more reliable. While a signal is being transmitted through a particular transmission medium, it suffers a number of impairments. Two such important impairments are *attenuation* and *noise*.

Attenuation reflects the fact that the strength of the signal falls off with distance. If a signal has weakened substantially in a long transmission, then it may be difficult to recognize its exact frequency and amplitude. In the case of digital (binary) transmission, the receiving stations need only to distinguish between two states for each bit (whether the bit sounded at all or not) in order to regenerate it exactly. In addition, the discrete nature of digital signals allows the use of check bits (binary error-protection codings) that bear a particular mathematical relationship to groups of bits and indicate an error condition when a bit is received improperly. In analog transmission,

to compensate for attenuation *amplifiers* are inserted at various points to impart a gain in signal strength. Unfortunately, amplifiers also boost the noise components. Thus, with amplifiers cascaded to achieve long distances, the signal becomes more and more distorted. In digital transmission, *repeaters* rather than amplifiers may be used to achieve greater distances. A repeater receives the digital signal, recovers the pattern of 1's and 0's, and retransmits a new signal. Thus the attenuation is overcome.

For any voice or data transmission event, the received signal will consist of the transmitted signal, modified by the various distortions imposed by the transmission system, plus additional unwanted signals that are inserted somewhere between transmission and reception. The latter, undesired signals are referred to as noise. The noise introduced by the medium is a function of transmission distance. It is noise that is the major limiting factor in communications system performance. For a signal to be received intelligibly it must maintain a level sufficiently higher than noise. In the case of analog transmission, with the use of amplifiers (to increase signal strength) the effects of noise are cumulative and a strong function of transmission distance. For digital transmission over the same noise medium, on the other hand, every information-carrying bit can be regenerated periodically so that the final signal quality is no longer a strong function of transmission distance. Thus, it is possible to transmit information longer distances and over lesser quality lines by digital means while maintaining the integrity of the information.

Digital representation has also an advantage when *store-and-forward* systems are employed whereby information messages are stored and then transmitted to their intended destinations. In the case of analog signal storage, the noise increases with time, as in the example of audio recording on analog tape. If the analog signal is represented digitally prior to transmission then the final signal quality is no longer a function of storage time. One can, for example, store the bits in a computer memory and then instruct the computer to forward the message later on. Despite the manipulation, the end message sounds or looks just like it would have originally. Finally, digital is the preferred method of signalling in message encryption. Recent technical advances have led to significant improvements in the voice quality and cryptanalytical strength of analog scrabblers. However, it is still conceded that digital encryption provides greater levels of security in voice communication. Much more efficient procedures have been developed for encrypting a digital sequence and for generating and distributing encryption keys.

C.1.2 Transmission Media. The transmission medium is the physical path between the transmitter and the receiver in a transmission system. The nature of the medium is an important determinant of the quality of transmission. Transmission media may be classified as *guided* (cable) or *unguided* (free-space propagation). In both cases, communication is in the form of electromagnetic waves. With guided media the waves are transmitted along a physical path; examples include the *twisted pair*, *coaxial cable*, and *optical fiber*. Unguided media provide a means for transmitting electromagnetic waves but do not guide them; examples are propagation through the earth's atmosphere, vacuum and sea water.

Twisted Pair. A twisted pair consists of two insulated copper wires arranged in a regular spiral pattern. A wire pair acts as a single communication link.

In general, a number of these pairs are bundled together into a cable by wrapping them in a tough protective sheath. Typically, cables contain hundreds of pairs. The twisting of the individual pairs minimizes electromagnetic interference between the pairs. Twisted pair is by far the most common transmission medium for both analog and digital signals. In the telephone system, individual telephone sets are connected to the local office by twisted-pair wire. These are referred to as the *local loops*.

Compared to other transmission media, twisted pair is limited in distance. Attenuation is a strong function of frequency, and the medium is quite susceptible to interference and noise. Several measures can be taken to reduce transmission impairments. Shielding the wire with metallic braid or sheathing reduces interference. The twisting of the wire reduces low-frequency interference, and the use of different twist lengths in adjacent pairs reduces crosstalk (the unwanted coupling between signal paths).

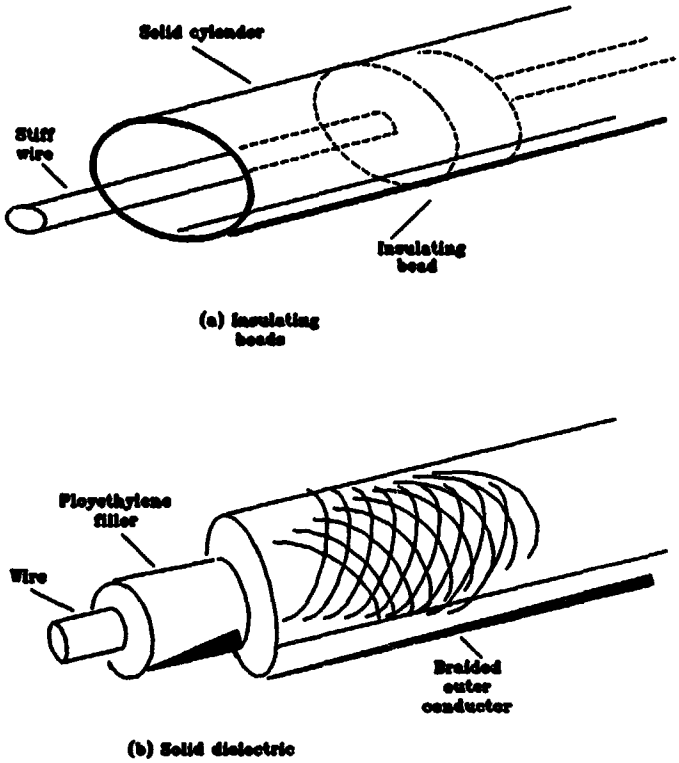

Source: Stallings (1989)

Figure C6: Coaxial cable construction.

Coaxial Cable. Coaxial cable, like twisted pair, consists of two conductors, but it is constructed differently to permit operation over a wider range of frequencies. It consists of a hollow outer cylindrical conductor surrounding a single inner wire which is held in place by either regularly spaced insulating

rings or a solid dielectric material. The outer conductor is covered with a jacket or shield.

Coaxial cable was until recently the dominant transmission medium for long-haul trunking (long-distance telephone transmission). However, in this particular application it has been facing increasing competition from microwave, optical fiber, and satellite carriers. Coaxial cable is also spreading rapidly as a means of distributing TV signals to individual homes, and it is the medium of choice for many local network systems. The explosive growth in its use in local networks is due to its versatility; coaxial cable can support a large number of devices with a variety of data and traffic patterns, over distances that encompass a single building or a complex of buildings.

Coaxial cable is used to transmit both analog and digital signals, and its transmission impairments are not nearly as less severe as those of twisted pair. It exhibits superior frequency attenuation characteristics to twisted pair, thereby permitting effective use at higher frequencies. Because of its construction characteristics, coaxial cable is much less susceptible to interference and crosstalk than the twisted pair.

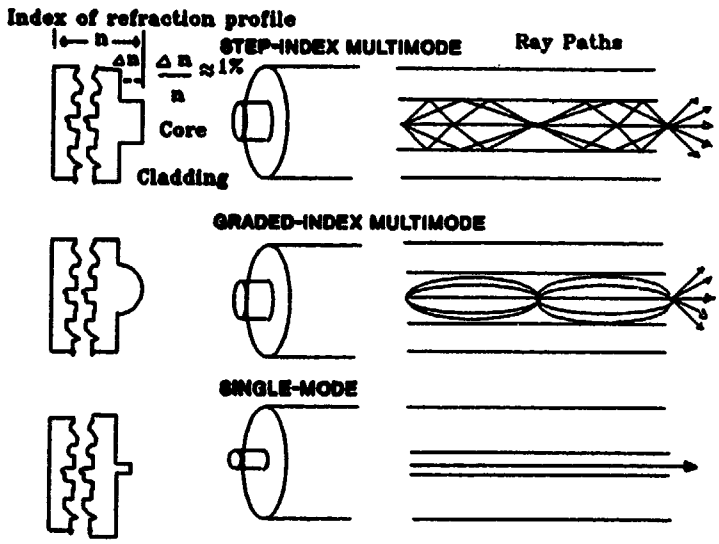

Source: Stallings (1988)

Figure C7: Types of Optical Fiber.

Optical Fiber. An optical fiber is a thin, flexible tube (glass or plastic) capable of conducting an optical ray. It has a cylindrical shape and is comprised of three concentric sections: the core, the cladding, and the jacket. The core which is the innermost section, consists of one or more thin strands, or fibers, made from glass or plastic. Each fiber is surrounded by its own cladding, a glass or plastic coating that has different optical properties from those of the core--the core has a slightly higher index of refraction than the surrounding cladding (light travels more slowly in the core than in the

cladding). Light is guided by total internal reflection at the core-cladding boundary. The outermost layer, surrounding one or a bundle of cladded fibers, is the jacket. The jacket is composed of plastic and other materials layered to protect against environmental dangers (moisture, abrasion, crushing, etc.).

In the last few years the technological record of fiber optics has been one of a revolutionary progress, marked by plummeting costs, capacities that double every couple of years, and improving reliability. Indeed, the development of practical fiber optics communications systems represents one of the most significant technological breakthroughs in transmission. Optical fiber already enjoys widespread use in long-distance telecommunications, and its use in local networks and short-haul video distribution is growing rapidly.

The principal advantage of optical fiber transmission over twisted pair and coaxial cable is the very large *bandwidth* (the width of the signal's spectrum) and, consequently, the very large communications capacities achievable. Another advantage of communication at optical wavelengths is small size and light weight. Optical fibers are considerably smaller than coaxial cables or bundled twisted-pair cable. For cramped conduits in buildings and underground along public right of way, the advantages of small size are considerable. The lighter weight reduces structural support requirements. Optical fibers also have much lower attenuation than typical metallic conductors, and with energy confined entirely to the fiber there is no radiation, noise pickup or crosstalk. Thus, fiber systems are not vulnerable to interference, and since they do not radiate energy they cause very little interference with other equipment and are secure from eavesdropping.

The only fundamental disadvantage of fiber optics is the large photon energy required for transmission at optical frequencies. This leads to higher received power requirements per bit of information relative to other transmission systems.

Terrestrial Microwave Relay. Microwave relay is a radio-based system whose original design required a relay tower at intervals of twenty to thirty miles and did not require a right of way between the points connected. The absence of rights of way provided the ability for new firms utilizing microwave to enter the long-distance telecommunications market. Microwave systems eventually became the dominant alternative to coaxial cable for long-haul trunking in many countries.

A microwave antenna usually has a parabolic shape and is fixed rigidly focusing a narrow beam to achieve line-of-sight transmission to the receiving antenna. The antennas are located at substantial heights above ground to extent the range between them and to be able to transmit over intervening obstacles. Microwave facilities require far fewer amplifiers or repeaters than coaxial cable--attenuation loss varies as the square of the distance in contrast to twisted pair and coaxial cable where the loss varies logarithmically with distance. However, with the increasing use of microwave systems, interference is a constraining impairment necessitating strict regulation of frequency assignments.

In recent years, entirely new short-haul microwave equipment have been aggressively marketed, rendering microwave the most attractive bypass technology

for short-haul medium density transmission. These short-haul equipment have had their greatest successes in private network applications. The newer microwave systems are relatively simple to construct and operate. Digital microwave has been a significant development.

As a result of these developments, rooftop microwave antennas are becoming a common feature of the modern urban landscape. In many instances, sophisticated users purchase and install these systems on their own. While such systems require a large, up-front capital investment, their subsequent operating costs are very low and system costs are basically insensitive to distance. Amortized monthly costs are, therefore, quite competitive with landline alternatives.

Satellite Earth Stations. Earth stations communicate by transmitting voice and data to and from satellites. The vast majority of communications satellites which are in use today are stationed in the *geosynchronous orbit*, an equatorial orbit located at the distance at which the orbital velocity of the satellite equals the velocity of a point on the earth's equator. As a result the satellite is stationary relative to the earth. A satellite is used to link two or more ground-based transmitter/receivers, known as earth stations or ground stations. The satellite receives transmissions on one frequency band (*uplink*), amplifies (analog transmission) or repeats (digital transmission) the signal, and transmits it on another frequency (*downlink*). A single satellite normally operates on a number of frequency bands, called *transponder channels*, or simply *transponders*.

Satellite relay enjoys several fundamental advantages over all terrestrial transmissions. First, satellite relay is especially suitable for point-to-multipoint transmission, since all receivers within a satellite's huge footprint can pull down a signal sent up on a single circuit. In contrast, terrestrial transmissions are inherently point-to-point. They have point-to-multipoint capabilities only to the extent that all of the destination points lie along the relay routes. Second, once a satellite is put in orbit, earth stations can be installed and communications established very rapidly (in days or even hours). Also, earth stations can be easily reallocated. Terrestrial circuits, on the other hand, require time consuming installations. Third, satellite relay facilitates mobile communications--it is very easy to communicate with moving objects or objects occupying a previously undefined position at the surface of the earth.

Satellite relay suffers from one major disadvantage. When a satellite is in geosynchronous orbit, the communications path between the terrestrial transmitter and the receiver is approximately 75,000 kilometers. Given that the speed of electromagnetic signals is 300,000 kilometers per second, the transit delay between earth-based correspondents easily reaches a large fraction of a second. This delay is particularly important in two-way or full-duplex communication (telephony or data communication applications). However, it has almost no impact on one-way or simplex transmission (television broadcasting). In the case of computer applications, the impact of the transit delay is exacerbated by the traditional use of acknowledgment messages which have to travel back to the emitter before the release of data from its buffers.

Radio Transmission. The principal difference between radio and microwave transmission is that radio is omnidirectional while microwave is focused. Consequently, radio does not require dish-shaped antennas that are rigidly mounted to a precise alignment. Although radio is a general term that encompasses all frequency bands, it is normally used in a more restricted sense covering the 30 MHz to 1 GHz range which has proven very effective for broadcast communications.

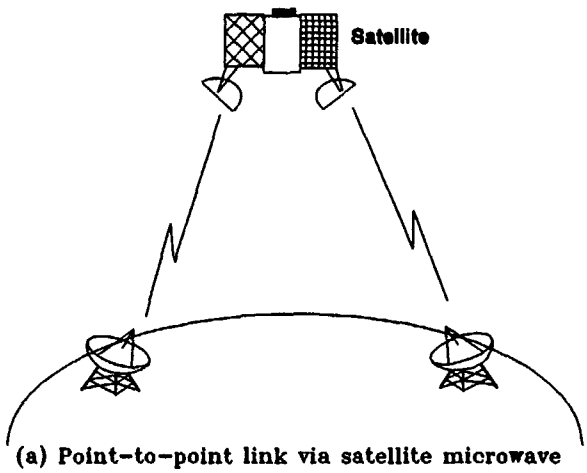

(a) Point-to-point link via satellite microwave

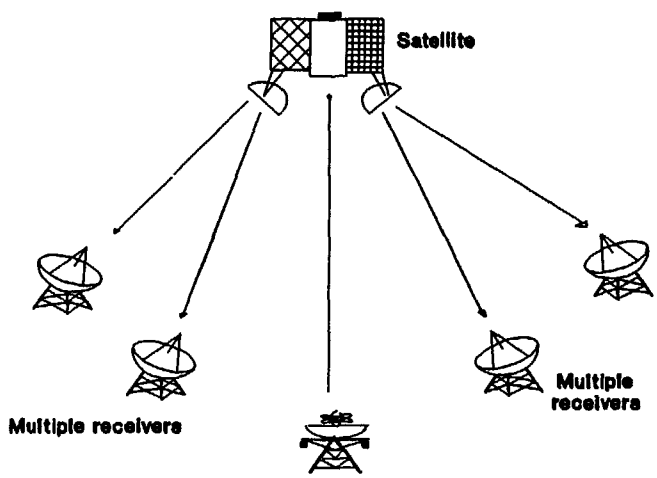

(b) Broadcast link via satellite microwave

Source: Stallings (1988)

Figure C8: Satellite communications configurations.

Transmission at that frequency range is limited to line of sight and distant transmitters do not interfere with each other due to reflection from the atmosphere--the ionosphere is transparent to radio waves above 30 MHz. Also, unlike the higher frequencies of the microwave region, radio waves are less

sensitive to attenuation from rainfall. However, radio transmission is subject to an important impairment due to multipath interference. Reflection from land, water, and natural or human-made objects can create multiple paths between antennas.

Cellular radio, conventional mobile systems, and specialized mobile radio services have grown very rapidly in the last few years. The mobile system switch can route traffic directly from one mobile receiver to another. Mobile systems, especially cellular radio, also offer access to the local public landline network through trunks that lead to tandem switches of the local exchange. Most of the traffic handled by mobile switches is in fact passed between the local exchange and mobile networks.

C.2 Switching Systems

Switching establishes a path between two specified terminals or *subscribers*. Thus, switches route traffic from a local distribution system, through the main trunks that link large regions, then back into a local distribution system to its final destination.

A switch has two basic components, a controller and a switching matrix. Information is sent and received over lines feeding into the switching matrix; the controller sets up the connections. The connections may consist of physically discrete paths (*space-division switching*) through separate communications channels, or time-slots (*time-division switching*) on a single physical path shared among multiple channels. Thus, with space-division a dedicated metallic path needs to be set between the calling and called subscriber while with time-division a common metallic path can be used by many simultaneous calls separated from each other in the time domain. Modern switches generally combine elements of both space- and time-division. In this context, the term *digital switch* implies that speech or other information signals, encoded in a bit stream, are combined with some element of time-division.

In data communications, the fastest growing segment of the telecommunications industry, there are three basic approaches to data switching: *circuit switching*, *message switching*, and *packet switching*. Communication via circuit switching implies that there is a dedicated communication path between the two stations. The most common example of circuit switching is the telephone network. Message switching, often called store-and-forward switching, accepts messages from originators, stores the messages, and then forwards each message to the next destination when circuits become available. Thus, while circuit switching provides end-to-end connectivity in near real time (thereby requiring both stations to be available at the same time), message switching does not. There is usually some delay as the message makes it through the system to its destination. Message switching, therefore, makes a much more efficient use of transmission links by maintaining a uniform load throughout the working day and even into the night. In contrast to this, circuit switching systems, such as those employed in telephone networks, do not achieve high load factors because of the high variability of demand over time during each day period. Some good examples of logical message units are telegrams, electronic mail, computer files, and transaction queries and responses. Packet switching utilizes some of the advantages of message and circuit switching while mitigating some of the

disadvantages of both. The principal difference between packet and message switching is that the length of the units of data that may be presented to the network is limited in packet switching. Complete data messages are broken down in short packages (*packets*), each with a header. These packets may be sent on diverse routes to their final destination. Because the different packets do not necessarily travel on the same route, they may not arrive at the far-end receiving node in their original sequential order. Thus, the far-end node must have storing and rearranging capabilities. Well-designed packet switching systems can reduce substantially the delivery delays of conventional message switching systems. In addition, packet switching may permit the achievement of much higher load factors in transmission facilities in comparison to other switching methods.

Table C2: Summary of Data Switching Methods

Switching Method	Advantages	Disadvantages
Circuit switching	Mature tecnology Near real-time connectivity Excellent for inquiry and response Leased service attractive	High cost of switch Lower system utilization, particularly link utilization Privately owened service can only be justified with high traffic volume
Message switching	Efficient trunk utilization cost-effective for low-volumed leased service	Delivery delay may be a problem Not viable for inquiry and response Survivability problematical Requires large storage buffers
Packet switching	Efficiency Approaches near real-time connectivity Highly reliable, survivable Low traffic volume attractive for leased service	Multiple route and node network expensive Processing intensive Large traffic volume justifies private ownership

C.2.1 Conventional Electromechanical Switches. There are basically two categories of electromechanical switches: in the *gross-motion* category the oldest is the Stowger switch or step-by-step switch. *Fine-motion* switches are typified by the crossbar switch. The step-by-step switches are the least sophisticated, based on inflexible controller hardware that translates customer-dialed digits into a fixed path through the network. If the path is unavailable, a busy signal results. With the crossbar switch, the precise path used is centrally determined by more flexible controller hardware. By reconfiguring the *common control*, call setup and routing procedures could be periodically changed within an existing switch. The next major innovation was to replace the fixed hardware logic that controlled the crossbar switching matrix with a digital computer. The availability of easy and low cost procedures for changing computer software, led to an unprecedented flexibility and efficiency in call setup procedures.

Step-by-Step or Stowger Switch. A step-by-step switch is normally based on a stepping relay with 10 levels. In its simplest form it is activated by the dial pulses from the subscriber's telephone with each pulse stepping the switch one level--if the subscriber dials a 3, three pulses are generated by the subscriber's subset and retransmitted to the switch. The switch then steps to level 3 in the first relay bank. The second digit dialed similarly passes to the second stepping relay , the third to the third, and so on. To save space and reduce postdial delay, the step-by-step switch evolved into a two-motion switch, thereby combining two banks into one. The first digit dialed direct the switch to step vertically, while the second induces a horizontal setup within the same bank. The combine bank, therefore, covers 100 digits.

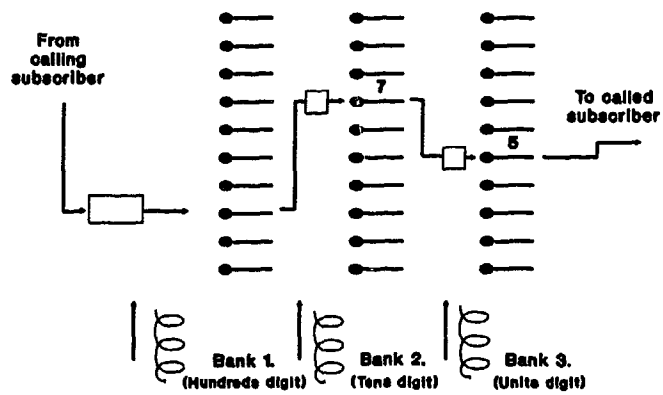

Source: Freeman (1989)

Figure C9: A step-by-step switch.

More modern step-by-step switches employ *line-finder* techniques. Line finders are simple switches, with several available per group of incoming subscriber lines. On an incoming call, when a subscriber goes "off-hook", a line finder automatically identifies the line seeking service and connects it to a line selector. The line finder then provides dial tone to the calling party. The last two digits dialed by the calling subscriber usually control the *connector* or the *final connecting stage*. The connector performs a busy-test on the called line and if busy, returns a "busy back" to the calling party. If the

called line is idle, the connector applies ringing current to the called line. Once the called subscriber goes "off-hook", the connector supplies talk battery to both calling and called subscriber. It provides supervision, holding the talk path in operation until one or both parties go "on-hook".

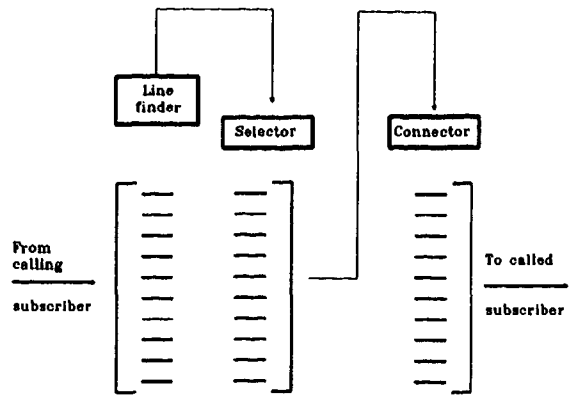

Figure C10: A step-by-step switch showing line finders, selectors, and connectors.

Crossbar Switch. The crossbar switch is a matrix switch used to establish the speech path. An electrical contact is made by actuating a horizontal and a vertical relay. Consider the switch in Figure C11. To make contact at point B_4 on the matrix, horizontal relay B and vertical relay 4 must close to establish connection. The closing is momentary but sufficient to cause *latching*. In conventional crossbar practice two types of latches are found, mechanical and electrical. The latch keeps the path connection until an *on-hook* remote instruction is transmitted to the exchange, freeing the horizontal and vertical relays to establish other connections. Modern local crossbar switches can handle up to 10,000 subscribers in a basic switch.

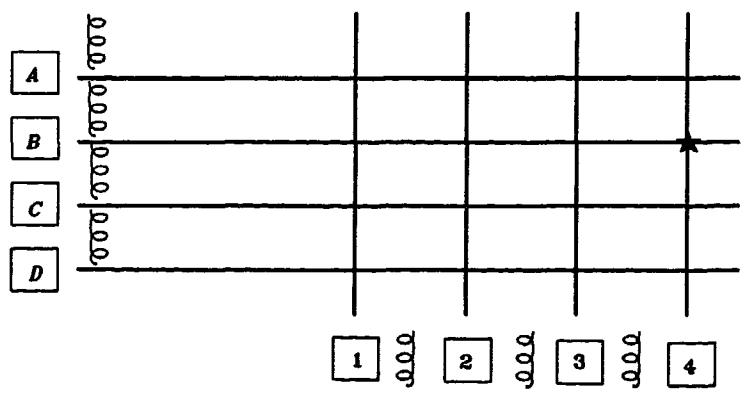

Source: Freeman (1989)

Figure C11: The crossbar concept.

C.2.2 Digital Switching. Digital switching enjoys a number of distinct economic and technical advantages over analog space-division switching. The economic advantages include: the smaller number of equivalent cross-points required for a given number of lines and trunks; the smaller size of switches; more common circuitry; and the continuous cost erosion of digital logic and memory. Digital switches also have technical advantages because: they are regenerative, i.e., they do not distort the input signal; are noise resistant; the binary message format is compatible with digital computers; and digital exchanges are lossless, i.e., there is no insertion loss when a switch is added to the network.

REFERENCES

Baumol, William J., Panzar, John C., Robert D. Willig, Contestable Markets and the Theory of Industry Structure, San Diego: Harcourt Brace Jovanovich, 1988.

Bolter, Walter G., McConnaughey, James W., and Fred J. Kelsey, Telecommunications Policy for the 1990s and Beyond, Armonk, New York: M. E. Sharpe, Inc., 1990.

Brennan, Timothy J., "Regulating by Capping Prices", *Journal of Regulatory Economics*, 1 (1989) 133-47.

Breyer, Stephen, Regulation and its Reform, Cambridge: Harvard University Press, 1982.

Brock, Gerald W., The Telecommunications Industry: The Dynamics of Market Structure, Cambridge: Harvard University Press, 1981.

Bruce, Robert R., "Options for the Future Development and Restructuring of the Brazilian Telecommunications Sector", mimeo, Infrastructure Operations Division, LA1 Department, The World Bank, May 1990.

Cabral, Luis M. B., and Michael H. Riordan, "Incentives for Cost Reduction Under Price Cap Regulation", *Journal of Regulatory Economics*, 1 (1989), 93-102.

Demsetz, Harold, "Why Regulate Utilities", *Journal of Law and Economics*, 11 (1968), 55-65.

Einhorn, Michael A. (ed), Price Caps and Incentive Regulation in Telecommunications, Boston: Kluwer Academic Publishers, 1991.

Freeman, Roger L., Telecommunications System Engineering, New York: John Wiley, 1989.

Greenwald, Bruce C., and William W. Sharkey, "The Economics of Deregulation of Local Exchange Telecommunications", *Journal of Regulatory Economics*, 1 (1989), 319-339.

Hobday, Michael, Telecommunications in Developing Countries: The Challenge From Brazil, London: Rutledge, 1990.

Jackson, Charles L., "Report on Technical Issues of Brazilian Telecommunications", mimeo, Infrastructure Operations Division, LA1 Department, The World Bank, November 1990.

Kahn, Alfred E., "The Road to More Intelligent Telephone Pricing", *Yale Journal on Regulation*, 1 (1984), 139-57.

Littlechild, S.C., Elements of Telecommunications Economics, Stevenage: Peter Peregrinus Ltd., 1979.

Noll, Roger W., "The Politics of Regulation", in R. Schmalensee and R. Willig (eds), Handbook of Industrial Organization, Vol. II, 1254-1287, 1989.

Noll, Roger W., "Telecommunications Reform in Brazil", mimeo, Infrastructure Operations Division, LA1 Department, The World Bank, August 1990.

Peltzman, Sam, "Toward a More General Theory of Regulation", *Journal of Law and Economics, 19 (1976)*, 211-40.

Posner, Richard A., "Theories of Economic Regulation", *Bell Journal of Economics*, 5 (1974), 335-58.

Rohlfs, J., "A Theory of Interdependent Demand for a Communications Service", *Bell Journal of Economics*, 5 (1974), 16-37.

Schaff, S., Legal and Economic Aspects of Telecommunications, Amsterdam: North Holland, 1990.

Schmalensee, Richard, The Control of Natural Monopolies, Lexington Massachussetts: Lexington Books, 1979.

Sharkey, William W., The Theory of Natural Monopoly, Cambridge: Cambridge University Press, 1982.

Squire, Lyn, "Some Aspects of Optimal Pricing for Telecommunications", *Bell Journal of Economics*, 4 (1973), 515-25.

Stallings, William, Data and Computer Communications, New York: MacMillan Publishing Company, 1988.

Stigler, George, "The Theory of Economic Regulation", *Bell Journal of Economics*, 2 (1971), 3-21.

Waverman, Leonard, "U. S. Interexchange Competition", in R. Crandall and K. Flamm (eds), Changing Rules: Technological Change, International Competition, and Regulation in Communications, 62-113, 1989.

Waverman, Leonard, "The Regulation of Intercity Telecommunications", in A. Phillips (ed), Promoting Competition in Regulated Markets, Washington: The Brookings Institution, 201-240, 1975.

Williamson, Oliver E., "The Vertical Integration of Production: Market Failure Considerations", *American Economic Review*, 61 (1971), 112-23.

Willig, Robert D., "The Theory of Network Access Pricing", in H. Trebing (ed), Issues in Public Utility Regulation, East Lansing: Michigan State University, 109-152, 1979.