DRD DISCUSSION PAPER

Report No. DRD298

THE EFFECT OF NON-TARIFF BARRIERS IN FOOTWEAR TRADE: PRELIMINARY EVALUATION

by

Taeho Bark
Korea Development Institute

and

Jaime de Melo
The World Bank

Development Research Department
Economics and Research Staff
World Bank

The Effects of Non-Tariff Barriers in Footwear Trade: Preliminary Evaluation

Taeho Bark
Korea Development Institute

and

Jaime de Melo
Development Research Department
The World Bank

May 1987

This paper reports on ongoing research financed under RPO 674-20 "The Footwear Industry in Developing Countries and How it adjusted to Non-Tariff Barriers to International Trade". Prepared for a colloquium to be held in Toulouse June 29, 30, 1987 "Theorie de la Negociation et de la Competition Internationale". We thank Patrick Messerlin, Alan Winters and participants at an IIES workshop on European Trade Policy for helpful comments on an earlier version. The views are those of the authors and should not be attributed to their respective institutional affiliations. We thank Julie Gwynn and Jackson Magargee for much appreciated support.

Abstract

This paper analyzes economic aspects of non-tariff barriers to trade in the context of the quotas and voluntary export restraints that were imposed on footwear trade during 1977-81. The paper surveys the restrictive measures that were applied and offers some tentative conclusions as to why protectionism ended. It is argued that the characteristics of the footwear industry, namely a mature industry with little product differentiation, low start-up costs and easily accessible technology contributed to making the restrictive measures ineffective. Evidence on the global pattern of footwear trade show that developing countries continued to increase their share in developed markets, even for the restricted footwear categories.

The Effects of Non-Tariff Barriers in Footwear Trade: Preliminary Evaluation

I. Introduction

Shifting patterns of comparative advantage call for a relocation of production of mature industries from developed to developing countries. Textiles and footwear, labor intensive industries which have been little affected by technical progress, are cases in point. However, the demand for protectionism from the declining industries of developed countries slows this relocation. Now that successive multilateral trade negotiations have eliminated tariffs for most manufacturing products as a means of protectionism, non-tariff barriers to trade have become the major tool for retarding the relocation of production of mature industries from developed to developing countries. This paper reports preliminary findings of ongoing research on how the relocation of the footwear industry has taken place from developed to developing countries and the role of non-tariff barriers in impeding that relocation.

Unlike most work on the subject where footwear protectionism is studied from a single country perspective (e.g. Morkre and Tarr (1980), Hufbauer et al. (1985)), we take a global perspective. This allows us to study how protectionism spread across countries, and to gauge spillovers across markets and across broadly defined footwear categories. We concentrate our case study on the period starting in the early seventies when developing countries rapidly expanded their share in world footwear trade leading to the close down of

footwear factories in the developed world. In turn, factory closedowns led to a demand for protectionism in many developed countries. A surge of bilateral (and multilateral) NTBs took place in the mid-seventies, most notably in the US which negotiated bilateral VER arrangements with South Korea and Taiwan during the period June 1977 - June 1981. Then footwear protectionism subsided though, as the paper shows, a good deal of NTB protectionism remains. The purpose here is to analyze the developments that led to this protectionism and to examine whether the officially stated objectives of protectionism were achieved, in particular with respect to South Korea and Taiwan.

The case study serves to illustrate several trade-theoretic and political economy aspects of protectionism. These aspects are summarized in Section 2 where NTBs are contrasted with tariff-type measures. Section 3 summarizes a selection of the major NTB measures that were taken against footwear exports of developing countries. The discussion of footwear protectionism also serves to illustrate some of the propositions mentioned in Section 2. Section 4 analyzes the evolution of trade shares between developed and developing countries over the period 1965-84. This global perspective serves to provide a broad assessment of how footwear protectionism affected the ongoing shift of comparative advantage towards developing countries. Section 5 turns to a more detailed examination of how trade flows from the restricted countries adjusted to the rising footwear protectionism of the late 1970s.

Our conclusions are preliminary in part because the available data for analysis does not correspond precisely with the categories of footwear subject to NTBs. However, it appears that NTBs in footwear led only to a temporary slowdown in the growth of developing countries exports. Given that

NTB protectionism was widespread, this suggests that non-MFN protectionism outside of GATT of industries like footwear is not likely to have much impact on trade flows.

2. The Economics of NTBs

The description of measures in Section 3 below indicates that two types of measures were applied: quotas, and voluntary export restraints (VERs). This section briefly summarizes the ways in which these measures differ from the traditional tariffs extended on an MFN basis. To simplify the analysis, we will maintain two assumptions that roughly characterize the footwear industry: (1) production takes place competitively before and after the imposition of NTBs; (2) the product subject to an NTB is undifferentiated so that domestically produced and foreign produced goods are perfect substitutes. These assumptions obviate the need to consider market structure considerations and simplify the graphical exposition. 1/

Three aspects of NTBs will be underlined. First, except in the case where a quota is imposed, the trade restraint is imposed by the exporting country instead of the importing country. As is well-known, this has implications for who gets the rents. Second, NTBs are usually negotiated on a bilateral basis. This has implications for third markets. Third, the bilateral negotiations of VERs and quotas often result in the commodity categories being loosely defined. This facilitates quality upgrading.

Figure 1a shows the effects of a VER or quota on the importing country for the case where the domestically produced good and the imported good are perfect substitutes in consumption. For the time being, assume that there is only one supplier to this market. With free trade, the market price is P_o

Figure 1a

Effects of a Quota in the Importing Country

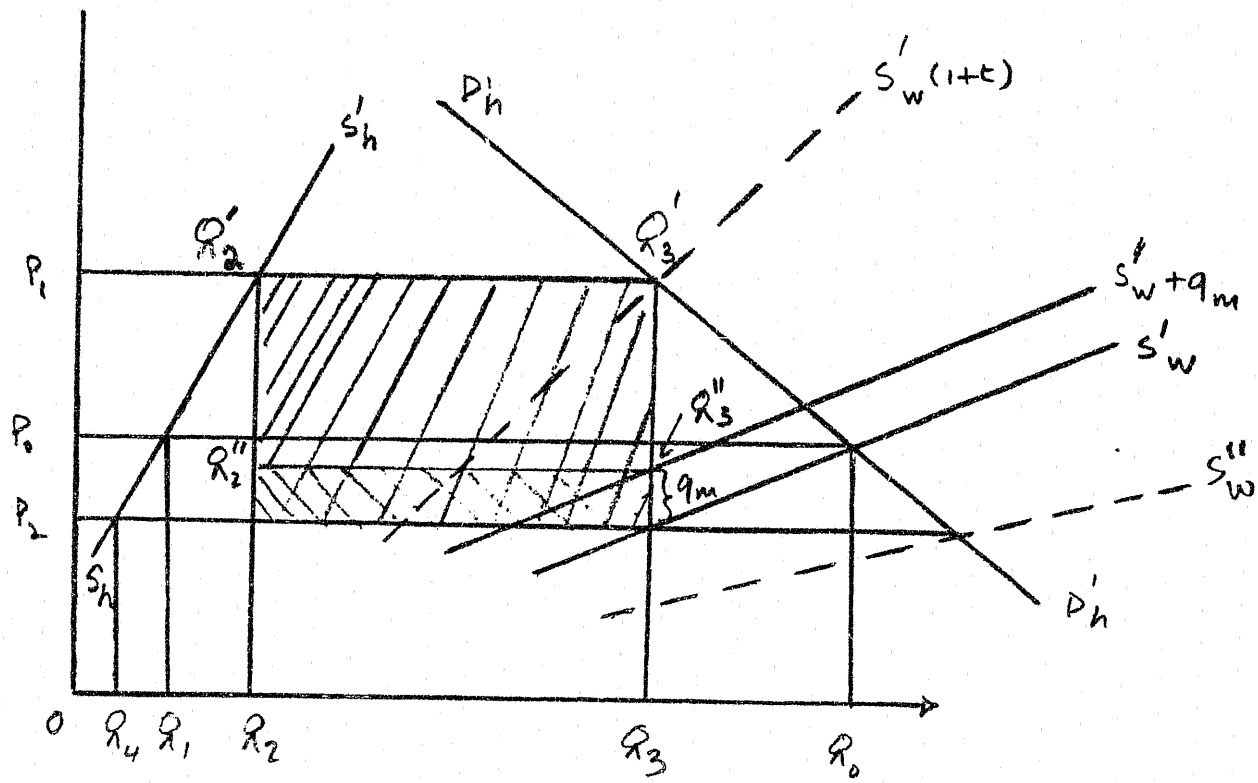

Figure 1b

Effects of a VER in the Exporting Country

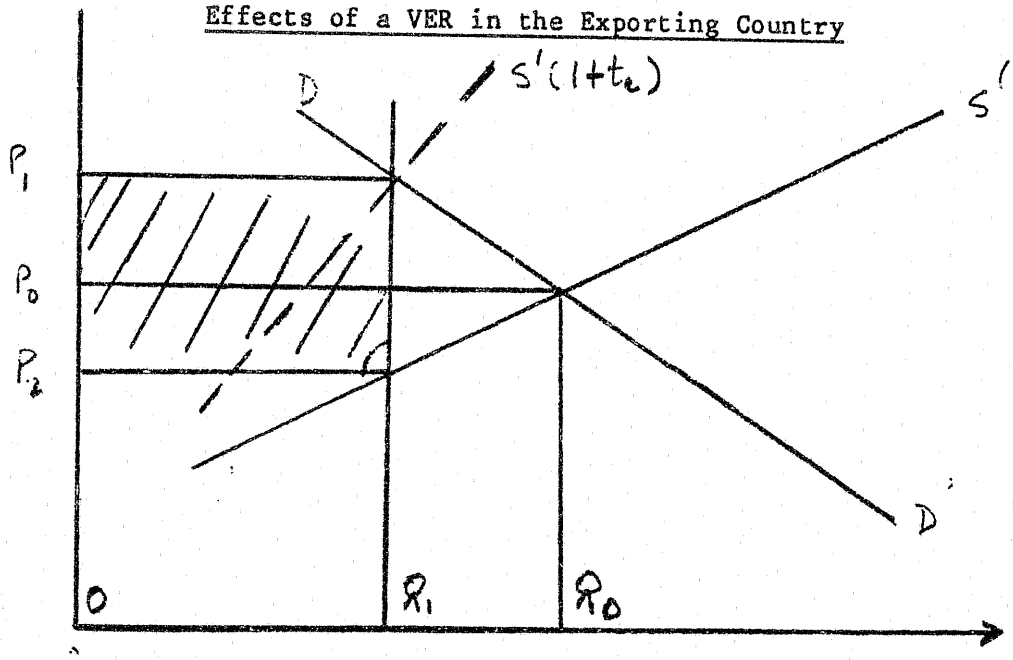

with OQ_o consumed, of which Q_1Q_o is imported. Consider three alternative means to restrict imports to Q_2Q_3. The traditional method is the tariff which shifts upward the supply schedule to $S_w'(1+t)$ and the importing country's government collects the shaded area as revenue. For the developed countries which are members of GATT, this option is not used because it would entail having to make concessions. The second method is to unilaterally impose a quota of $Q_2'Q_3' = Q_2Q_3$. The result is the same except for distributional implications of the rent resulting from the quota. Since the quota is imposed by the importing country, the issue is how licenses are made available to importers. If they are made freely available to importers, the entire shaded area accrues to importers. Consider now the case where a two-tier allocation system is used: a fraction of the licenses are given to importers free of charge, and the remainder is auctioned by tender bid. 2/ This is equivalent to charging importers a quota charge q_m for all licenses, the rate being determined by the fraction of licenses that are auctioned off. 3/ Since it is assumed that importers are in perfect competition, the windfall profits to the importers is reduced and equal to area $Q_2'Q_3'Q_2''Q_3''$ since they have to pay q_m per license to the government which implies that the supply schedule of imports is shifted upwards to $(S_w'+q_m)$. The remainder of the rent is collected by the government.

Consider now the third option, namely to negotiate a VER which is administered by the exporting country. This case is depicted in Figure 1b which shows the export supply and the demand for exports. Let the negotiated VER reduce quantities exported by Q_1Q_o. With the VER, the rents depicted by the shaded area accrue to the exporting country. Symmetry with respect to the discussion of the import side holds. First a price restraint can be imposed

instead of a quantity constraint by imposing an export tariff, which shifts the export supply schedule to $S'(1+t_e)$. This corresponds to a VER-Price restraint as was the case for the negotiation between the EEC and Brazil for exports of women's leather footwear. In contrast with the quota case, revenue accrues now to the exporting country government rather than to exporters. 4/ Given that governments of exporting countries typically give away export licenses free of charge to exporters, with a quantity VER, the rent accrues to exporters. Thus, the essential point of a VER is that the rents accrue to the exporting country which explains why VERs are not opposed by exporting countries. 5/

The second aspect of VERs which distinguishes them from tariff measures is that negotiations are on a bilateral basis. As shown in Section 3 below, the VERs on footwear were source specific which implies that only some sources of supply were affected. To consider potential spillover effects return to Figure 1a but now let D_hD_h' represent demand in the nonrestricted importing market and S_w' supply to that market. The effect of the VER will be to shift the supply curve to the non-restricted market to S_w'' which implies a production loss of Q_4Q_1 in the nonrestricted market and hence a demand for protectionism there. This of course is a reason for the "domino" effect discussed below in Section 3. 6/

The last issue has to do with the incentives to upgrade quality (i.e. to shift production towards items with higher unit values) when a VER is imposed. This aspect too has been well studied in the literature (e.g. Falvey (1979), Rodriguez (1979), Feenstra (1986)) and need only be summarized here. The argument is that insofar as higher quality has a higher market price (and licenses are transferable if firms are specialized in single quality

Table 1

Footwear Protectionism 1980-85

Country	Footwear Type	Exporter	NTB	Tariff Duty Rates (1983)	Period (of NTB)	Measures of NTB Coverage: Ratio [g] 1981	1986
Japan	Leather	All [a]	Value Import quota [b]	12.7	1952 -	6.4 (6.4)	6.4 (6.4)
Australia	All Footwear	MFN	Value import Quota No quota Tariff quota [c] [d]	27.8	Until 1960 1960 - 74 1974 -	N.A.	
Sweden	Rubber boots Leather and Plastic	S. Korea Taiwan Malaysia All	Quota and VER Non-MFN Quota	2.7	1970 - 84 1975 - 77	N.A.	
USA	Non-Rubber Footwear	S. Korea Taiwan	VER Voluntary VER	11.4	1977 - 81 1981 - 82	73.5 (27.2)	0.0 (0.0)
EEC	All Footwear Women's Footwear	All Countries [e] Brazil	Prior import surveillance then Posteriori import surveillance [f] VE -Price-Restriction	6.1	1978 1981	49.5 (9.9)	52.3 (10.3)
Canada	Leather Non-Leather Leather + Non-Leather	All All All	MFN Quota MFN Quota MFN Quota	23.4	1977 - 81 1981 - 82 1982 - 85	N.A.	
UK	Non-Leather Leather Women's Footwear	Taiwan Taiwan Brazil	Quota Ind.-to-Ind. VER VE-Price-R	See EEC	1977 - 83 1982 - 83 1981 -	12.2 (0.2)	12.3 (0.2)
France	Leather and Rubber Slippers and Espadrilles	Taiwan S. Korea	Ind.-to-Ind. VER Ind.-to-Ind. VER	See EEC	1981 - 82 1981 - 84	6.6 (4.6)	12.8 (4.6)

Source: Hamilton (1986) and own calculations. N.A. Not available.

Notes Table 1

a/ USA excluded starting early 1980s.

b/ Quota size not publicly released. Quotas are distributed to 26 importers mostly affiliated with major Japanese footwear manufacturers.

c/ Imports beyond prespecified quantity at penalty tariff rate.

d/ Two-tier quota allocation system to importers: 70% on past performance; 30% for sale by tender once a year.

e/ Informal pressures on Brazil, Hong Kong, S. Korea, Malaysia, Pakistan, Taiwan, China.

f/ Supplemented by "bilateral private, agreements" between the European Confederation of Footwear Industries and the Korean Footwear Exporters Association. Between 1975 and 1978 the Community relied on retrospective control of imports for certain types of leather footwear.

g/ The coverage ratio is defined as the percentage of imports affected by NTBs, including fiscal measures, volume control measures, import authorizations and control of price level. Figures in parenthesis are the coverage ratios due to volume control measures. All figures apply to all exporters. For further discussion see, Nogués, Olechowski and Winters (1986) for definitions, data sources and caveats about interpretation.

products), the use of the quota to export higher quality products means that the ad valorem tariff is lower for the higher quality products than for the lower quality products. Therefore, the quota will cause exporters to shift to higher quality exports compared to what a uniform ad valorem tariff would. Upgrading may occur for other reasons as well. For example, Bark and de Melo (1987a) show that under plausible conditions, upgrading will also occur even when licenses are not transferable (as is often the case in practice) if the objective is to maximize export earnings, an objective that Yoffie (1983) mentioned was prevalent during the negotiations by South Korea and Taiwan with the US. In the case of relatively undifferentiated products, quality upgrading is, of course, made possible because product categories are loosely defined. 7/ For our analysis, it is important to take quality upgrading into consideration since upgrading is a reason for the observed trade patterns examined in Sections 4 and 5.

3. The Rise and Fall of Footwear Protectionism 8/

This section selects major footwear importing developed countries which have restricted imports by non-tariff measures. 9/ Table 1 summarizes the measures by footwear type indicating the kind of NTB applied and the duration of the measure. Entries are in chronological order to show how protectionism spread across developed countries.

Several characteristics of NTBs mentioned above are apparent from Table 1. First, NTBs take many forms ranging from import surveillance to quotas and VERs. Second, only a few countries extended quotas on an MFN basis: Australia, Japan and Canada applied restrictions to all countries. Third, negotiation often lacks transparency and it is hard to know what

measures were actually taken. For example this often occurs in the case of industry to industry negotiations. In other cases, lack of transparency is even more obvious. For example, import quota sizes are not made public in the case of Japan. Fourth, VERs are often preceeded by warning signals. A warning signal was clear in the EEC action of successively imposing prior import then posteriori import surveillance before negotiating the VER price restraint with Brazil. 10/ Fifth, negotiations are sometimes carried out at governmental levels, other times at industry levels.

The different arrangements by which footwear trade is restricted imply that the rents sometimes accrue to exporting countries sometimes to importing countries. For example, in the case of the US negotiated VERs with South Korea and Taiwan, the rents accrued to exporting countries. Since the quotas were not auctioned off in the exporting countries, the footwear industry in South Korea and Taiwan were the beneficiaries. 11/ However this is not the case in the Australian quota allocation system. There, not only do the rents accrue to the importing country but, as shown in Section 2 above, the two-tier allocation system whereby part is distributed free of charge to importers based on past import performance, and the remaining part (30 percent) is offered for sale by the government implies that part of the quota rents accrue to the government. 12/ Finally is the interesting case of Japan which approximates the industrial organization under which the domestic producers are the same firms that are major importers. Insofar as the Japanese producer-importers have market power, it may be that quotas are not filled. 13/

Several political economy aspects of footwear protectionism emerge from Table 1. First, the chronology in Table 1 shows that footwear protec-

ionism escalated after the US reached its negotiated agreements with South Korea and Taiwan in June 1977. This "domino" effect analyzed by Hamilton (1986a) was striking. Two months after the US restrictions were announced, Canada moved to impose restrictions as well, citing its concern about the agreements reached by the US. 14/ Likewise, the UK unilaterally imposed restrictions on Taiwan in August 1977. Ten months after the US restrictions came into effect, the EC switched from a system of "retrospective control of imports" to a system of "prior surveillance". The dates describing the periods of NTB restrictions also suggest that other countries followed suit when the US did not renew its agreement with South Korea and Taiwan. However, the figures for the coverage ratios for 1981 and 1986 in the last column of Table 1 suggest little change in NTB protection between the two years.

The evidence in Section 4 below suggests that the gradual abandonment of footwear protectionism was brought about by two factors. First there was adjustment of the footwear industry in developed countries as it continued to decline. Second, the evidence suggests that the protective measures were porous. On the demand side, less pressure was forthcoming as employment in footwear declined and those that remained in the footwear industry came to realize that the measures adopted worked to stimulate competition rather than protection. For example the quality upgrading that has been detected by Aw and Roberts (1986, 1987) indicates the restricted suppliers shifted production towards higher quality footwear which is precisely the kind of footwear developed countries specialized in. On the supply side, the negotiations allowed sufficient leeway for the restrictions to be made ineffective by, among others, changing classifications, as the analysis in Section 4 below suggests. 15/ This bypassing of restrictions was of course made easier by

the characteristic of footwear: a relatively undifferentiated product with low start-up costs which makes it easy to "tranship" or to shift investments to unaffected third countries. 16/ We return to this in Section 4. Thus, not surprisingly, protectionist pressures faded.

The second aspect of NTB protectionism illustrated by the agreements summarized in Table 1 is that they bypass legality at several levels. Not only do the agreements bypass the spirit of the GATT, but they also bypass other regulations as well. For instance, Sweden's unilateral decision to restrict was against EFTA rule. So was the UK's decision to bypass the EC commission when it negotiated directly with South Korea. And in the case of industry-to-industry agreements, there is not even a semblance of consumer's interests being taken into account, as they may be when negotiations through governmental channels result in some representation of consumer interests.

4. Changing Comparative Advantage in the Footwear Industry: 1965-85

Footwear comes in two major types: fully injected and built-up footwear. Fully injected or full plastic footwear is quite different from built-up footwear in physical characteristics, quality and prices, and requires a completely different manufacturing technology. Plastic and rubber shoes are examples of injected footwear, leather shoes are an example of built-up footwear and canvas shoes are an example of half-injected footwear, a third category of footwear that combines elements of fully injected and built-up shoes. Fully injected shoes are so different from built-up footwear that the two can hardly be considered as substitutes from a technological point of view.

Table 2

Growth in Footwear Trade a/

	1965-84	1965-76; b/ 1981-4	1977-80 b/	$\bar{R}^2$ c/
All Footwear	9.2	8.4	13.0	.93
Rubber	9.7	9.0	14.0	.79
Leather	8.9	8.1	12.2	.94
Other	18.2	17.5	36.2	.94

NOTES: All figures are average yearly growth rates over the relevant period. All countries including CPEs.

a/ Trend growth rates obtained by regressing the logarithm of the total dollar value of imports deflated by the CPI index of industrial countries ona time trend.

b/ Estimated from $\text{Log } M_t = a_o + a_1 D + a_2 T + a_3 T*D$ where D=0 except for T = 1977, 1978, 1979, 1980, for which D=1.

c/ Fit from estimation of $\text{Log } M_t = a_o + a_1 D + a_2 T + a_3 T*D$.

SOURCES: UN Trade data (see text).

Technology for building footwear has traditionally come from developed countries. Technology appears to be easily available and is easy to operate. Hence the transmission of new machinery is diffused rather rapidly. 17/ Footwear is a technologically mature industry in that technological progress is slow. As a first approximation, one can assume that a common technology is widely shared across the world, and that comparative advantage is determined by the factor endowments theory of international trade developed by Hecksher, Ohlin and Samuelson (HOS).

To study the evolving trade in footwear we distinguish three categories of countries: developed countries (DCs), developing countries (LDCs) and centrally planned economies (CPEs). We draw on UN trade data where footwear is disaggregated into three categories: rubber and plastic, which corresponds quite closely to the fully injected type of footwear described above; leather which corresponds to the built-up category and is generally of higher quality and fashion quality; and other footwear which is an amalgamation of wood and cork footwear, footwear parts, and gaiters. 18/

As shown in the appendix, the data support what the HOS trade model would predict, namely little intra-developing country trade. All trade is destined to the developed countries and the available statistics for CPEs indicate that they are not major participants in footwear trade. Hence, except when indicated, CPEs are excluded from the analysis.

Table 2 shows that footwear trade has been growing rapidly. Average annual growth rates during 1965-84 were close to 10% p.a. Furthermore the period of increased protectionism did not deter trade growth. Two conclusions emerge from this first look at the data. First, growth in trade accelerated during the years of increased protectionism. 19/ Second, the prediction that

Table 3

Average Shares of total Footwear Exports 1/

	Developed Countries	Developing Countries	Centrally Planned Economies
1963 - 1969	.84 (.84) 2/	.11 (.12)	.05 (.04)
1970 - 1976	.72 (.62)	.23 (.33)	.05 (.05)
1977 - 1981	.60 (.53)	.35 (.41)	.05 (.06)
1982 - 1984	.51 (.47)	.45 (.49)	.04 (.04)

Notes: Data sources and deflation procedures as in table 2.

1/ Arithmetic averages

2/ End of period shares in parenthesis.

Figure 2

Developing Countries Share of Developed Countries Imports a/

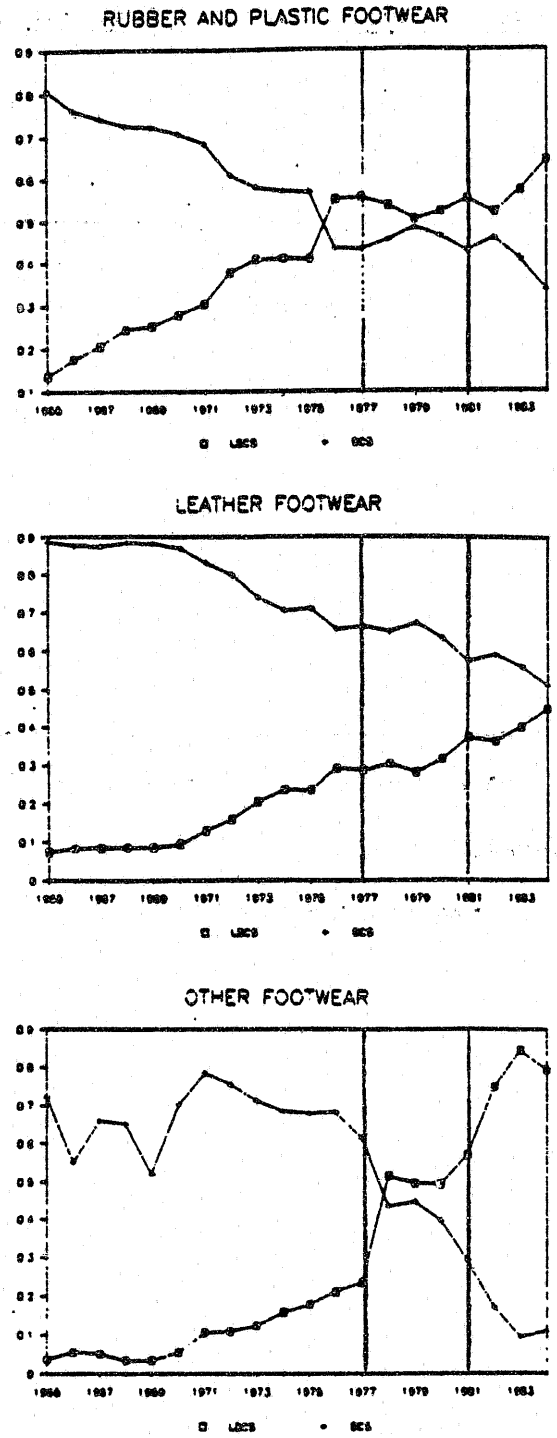

SOURCES: Same as Tables 2 and 3.

a/ Shares do not add up to 1.0 because CPEs are excluded.

restricted exporters will tend to shift towards unrestricted footwear categories is suggested by the data and deserves further scrutiny. Indeed the category "other footwear" grew the most rapidly during the restricted years. Of all categories, "other footwear" experienced the most rapid increase in its growth rate during the period of increased protectionism. 20/

Developing countries started to raise their share in world footwear trade around 1970 (see Table 3). Up until 1970, over 80% of world trade in footwear originated among developed countries. Furthermore, trade shares were stable during the 1963-69 period. Then, between 1970 and 1976, developing countries dramatically raised their share in world trade. Their average share more than doubled during these six years and, by 1976 the developing countries' share in footwear exports was three times higher than in 1970. Interestingly, market penetration did not slow down during 1977-81 as hoped by those who applied for protectionist pressures in developed countries.

Did protectionism halt developing country market penetration in developed country markets? Figure 2 shows that penetration was only briefly halted in rubber + plastic and in leather footwear until 1979. But note how developing countries raised their share of other footwear in 1978! The jump suggests that production was shifted towards non-constrained footwear categories or that product categories were redefined. In sum what was observed with protectionism under the MFA agreements repeated itself in the case of footwear: protectionism only temporarily slowed the relocation of footwear from developed to developing countries. 21/ These developments fit well Bhagwati's (1987) "porous protection" model of VERs, i.e. that VERs are ineffective when applied to undifferentiated products with low start up costs like textiles and footwear.

To sum up the results so far, the shift in the location of the footwear industry towards developing countries started around 1970. Comparative advantage shifted rapidly towards developing countries until footwear protectionism rose sharply in the second half of 1976. Analysis of the aggregate data reveals that, for developing countries as a whole, restrictions only briefly slowed this shift in comparative advantage.

5. Adjustment by the Restricted Countries

Though footwear protectionism was widespread during the late seventies, most VER negotiations were with Korea and Taiwan. 22/ We also add Brazil because of the VE-Price-restraint on women's (leather) footwear exports to the community. The examination of Brazil during the period when the US imposed restrictions only on nonrubber footwear exports from Korea and Taiwan is also useful to see whether Brazil displaced the restricted countries in the US market.

The analysis proceeds with the constant-market-share formula:

$$\hat{V}_i V_i^0 = \underset{(1)}{\hat{V} V_i^0} + \underset{(2)}{\sum_{jk}\sum (\hat{V}_{jk} - \hat{V}_k) V_{ijk}^0} + \underset{(3)}{\sum_{jk}\sum (\hat{V}_{jk} - \hat{V}_j) V^0_{ijk}} \qquad (1)$$

$$+ \underset{(4)}{\sum_{jk}\sum V_{ijk}^0 (\hat{V}_{ijk} - \hat{V}_{jk})}$$

$i \varepsilon$ Brazil, Korea, Taiwan, Other LDC
$j \varepsilon$ US, EEC, Other DC, other LDC + CPE
$k \varepsilon$ Rubber + Plastic, Leather, Other footwear

Where a "^" denotes a growth rate (e.g. $\hat{V}_i = ((V_i^1 - V_i^0)/ V_i^0)$ and:

V_{ijk} = exports of commodity k by country i to country j, $j \neq k$

$\hat{V}jk$ = growth of imports of commodity k by country j

$\hat{V}$ = world growth of footwear exports (g_w)

$\hat{V}_i$ = growth of total footwear exports of country i (g_i)

All values are expressed in constant dollars, using as before, the industrialized country CPI index (IFS) as deflator.

The constant-market-share formula decomposes the change in a country's exports into four terms: (1) a world term which states by how much a country's exports must grow to maintain constant market share; (2) a market term which indicates whether the country's exports were directed to fast or slow growing markets; (3) a commodity term which states whether the country's export composition has been in commodities growing faster or slower than average; (4) a residual. A negative (positive) residual reflects increases (losses) in market share. 23/ The residual is often named the "competitiveness" effect (see Leamer and Stern, 1970) even though it reflects more than changes in relative prices. In particular, the residual indicates quality changes and other effects such as changes in marketing efficiency, etc. In Tables 4 and 5 we express the contribution of each term in the decomposition as a percentage of the total change in country i's exports so that the figures add up to 1.

It is clear from the trend analysis of changing comparative advantage that trends established up until 1976 were broken during the years of NTBs. To smooth the fluctuation in the data, we report the decompositions based on averages of two adjacent years. 24/ In particular, the years covered by NTBs include in the averaging the year before restrictions were applied (1976) and the year before the restrictions were lifted (1980).

Table 4 summarizes the results of the constant-market-share decomposition for all footwear. Several results show up clearly. First Korea and

Table 4

Constant Market Share Decompositions: All Footwear [1/]

Term	Period															
	Korea				Taiwan				Brazil				Other LDCs			
	1	2	3	4	1	2	3	4	1	2	3	4	1	2	3	4
Growth rate (g_1)	4.28	1.36	.49	.14	1.89	.64	.77	.11	4.46	.35	.72	.46	.60	.19	.55	-.27
World (1)	.11	.19	.84	-.93	.25	.41	.53	-1.17	.11	.73	.57	-.28	.80	1.34	.75	.48
Commodity (2)	.01	-.04	0.00	-0.00	.06	-.25	.03	-.17	-.01	.27	-.04	.02	.03	.03	-0.00	-.11
Market (3)	-.04	-.01	-.23	1.18	-.09	.12	-.08	1.06	-.04	-.11	-.14	.54	.06	-.07	-.004	.02
Competitiveness (4)	.91	.86	.39	.75	.78	.73	.52	1.29	.94	.11	.61	.72	.11	-.30	.26	.60

1/ Decomposition given in equation 1. Terms defined in text.

Definitions of time periods (world growth rate, g_1, in parenthesis)

Period 1: 70/71 - 73/74 (48%)
Period 2: 73/74 - 76/77 (26%)
Period 3: 76/77 - 80/81 (41%)
Period 4: 80/81 - 83/84 (-13%)

Table 5

Constant Market Share Decompositions: Leather Footwear [1/]

Term	Period															
	Korea				Taiwan				Brazil				Other LDCs			
	1	2	3	4	1	2	3	4	1	2	3	4	1	2	3	4
Growth rate (g_1)	5.56	1.88	.67	.01	2.46	1.26	.82	.15	4.54	.36	.69	.47	.71	.25	.47	-.23
World (1)	.08	.19	.57	-17.01	.17	.28	.46	-.89	.09	.99	.55	-.29	.60	1.41	.81	.59
Market (3)	-.03	-.02	-.16	24.49	-.02	-.01	-.07	.72	-.04	-.11	-.14	.53	.03	-.03	.04	.10
Competitiveness (4)	.95	.83	.59	-6.48	.85	.73	.61	1.18	.94	.12	.59	.76	.37	-.39	.15	.31

1/ Decomposition given in equation 1. Terms defined in text.

Definitions of time periods as in Table 4. World growth rates in leather footwear exports were: 42%; 36%; 38%; -13% for periods 1-4, respectively.

Taiwan were gaining market share most among the group followed by Brazil. The rate at which both countries were gaining market share slowed down during period 3, in part because of the VERs, in part because their share in world trade was already quite high at the end of period 2. Other LDCs lost market share during period 2 and would have had to grow by 35 percent more than they did during that period to maintain their beginning of period market share. Did Brazil benefit from the VERs negotiated between the US and Korea and the US and Taiwan? Clearly during period 3 when VERs were imposed, Brazil was gaining more market share than Korea (a lower value for the world term) compared to period 1. Also it is clear that other LDCs did relatively better during that period compared with their performance during the pre-NTB period. Finally both Korea and Taiwan continued to gain market share in period 3, with Taiwan gaining market share most of all the groupings, perhaps because its exports were less concentrated in leather footwear than Korea's. Finally a comparison of the contribution of the market term during the last two periods shows that Korea and Taiwan were indeed concentrating their exports on slow growing markets (i.e. the US) during the VER period. However, both more than recouped during the post-VER period as the US was the only growing market during the early eighties as recession in Europe curtailed demand there.

Surprisingly, the decomposition in Table 5 for leather -- which is our closest proxy for restricted footwear -- indicates not only that Korea and Taiwan continued to gain market share in that footwear category but that they gained more than other LDCs in period 3. Korea gained market share virtually as much as Brazil and Taiwan more than Brazil. The figures however do not capture the impact of VERs on plastic shoes which are not separated out in the sample.

TABLE 6

Competitiveness Effect [1/]
(Millions 1980 US$)

Country		Period 1	2	3	4
Korea	All	68.5	108.8	31.6	3.4
	Leather	46.8	90.9	49.5	-14.3
Taiwan	All	87.7	80.6	85.3	71.2
	Leather	36.5	55.7	51.4	44.3
Brazil	All	51.2	2.6	29.8	51.6
	Leather	50.8	2.8	27.6	54.2
Other LDCs	All	7.5	-10.6	23.5	-54.0
	Leather	21.4	-13.8	9.2	-18.0

Sources: Tables 4 and 5.

1/ The competitiveness effect is expressed in terms of its yearly contribution to country i's change in exports during each relevant period.

All terms in the decomposition, other than the competitiveness effect, largely reflect exogenous factors. The competitiveness effect thus summarizes mostly the effect of changing comparative advantage induced by relative price shifts including those due to quality upgrading. Table 6 shows the yearly value of the competitiveness effect. The values show that the VERs slowed down Korea but not Taiwan and that Brazil and other LDCs showed a greater gain in competitiveness when Korea and Taiwan were restricted. In sum, the figures confirm that restrictions were not very successful in slowing down the shift in comparative advantage towards Korea and Taiwan.

6. Conclusions

NTBs differ from tariff protection in several respects. An important difference stems from the practice that NTBs are usually not extended on a multilateral basis and the product categories over which the restrictions are negotiated are usually loosely defined. As a result, when NTBs are applied to relatively undifferentiated products like footwear it is relatively easy for the restricted countries to adjust to the restrictive measures.

These principles were shown to be applicable in our preliminary analysis of how the global patterns of footwear trade by major product categories were affected by the numerous orderly marketing arrangements that were negotiated during 1977-81. Our case study of footwear showed that Korea and especially Taiwan continued to expand their market shares during the period of restrictions, though at a slower pace. Other developing countries which had been losing market share in the three years preceding the restrictions were able to regain some market share when the restrictions were in effect. However, according to the constant-market-share decompositions,

the competitiveness of Korea and especially of Taiwan continued to prevail during the restrictions. Although the results are preliminary because the data are not sufficiently disaggregated to single out precisely the categories of footwear that were subject to restrictions, we tentatively conclude that protectionism faded partly because the restrictions were ineffective and the footwear industry continued to decline in developed countries.

Footnotes

1/ The implications of market structure considerations for the breakdown of the equivalence propositions between price and non-price restrictive measures is analyzed in Takacs (1978). Under our assumptions, equivalence propositions hold so long as general equilibrium repercussions through changes in the terms-of-trade can be neglected. Thus the fact that NTBs are quantity rather than price measures is irrelevant.

2/ This is the system used by Australia to allocate import licenses.

3/ This equivalence is shown in Bark and de Melo (1987b). There the analysis is carried out from the point of view of two-tier license allocations on the export side where the criteria for allocation of licenses depends on (1) export shares in the restricted market ("basic" quota); (2) export volumes to nonquota countries ("open" quota).

4/ A Two-tier quota allocation in which a fraction of licenses are auctioned off is not discussed here since it is not done in practice. However conclusions are the same as in Figure 1a.

5/ Another reason why VERs are not opposed by exporters is that they are typically only negotiated for a few years at a time.

6/ Another interesting implication of spillovers, relevant for the footwear VERs discussed below in Section 3, is the case where some members of a customs union (e.g. the UK) or of a free trade area (e.g. Sweden) negotiate a VER unilaterally. Hamilton (1986b) discusses this case and shows that, compared with a global supply restriction, a VER leads to a greater efficiency loss as partner imports rise more than in the global restriction case.

7/ However, in the differentiated product case, Feenstra (1986) reaches ambiguous conclusions when quality is treated as a variable that can be continuously varied (the "hedonic" approach). Theoretical analyses in the hedonic vein yield the result that a quota will raise (lower) quality if consumers purchasing the lower quality products receive the smallest (largest) surplus.

8/ This section draws on Hamilton (1986a) who also discusses the justifications officially provided for the measures taken.

9/ Excluded are the smaller countries like Ireland, Norway, Denmark and Greece and EEC members like Benelux and Italy which only resorted to NTBs for a short while. Also excluded are EEC members like West Germany which did not take measures beyond those imposed at the Community level.

10/ Brazil introduced an export ban on hides and an export tax of 18 percent on finished leather to keep input prices low. When pressure was exerted, Brazil apparently moved towards a 15 percent export subsidy on all footwear which led the European Footwear Confederation to seek for imposition of countervailing duties from the EC Commission. In November 1981, Brazilians agreed to impose an export tax on women's leather footwear to counteract the full effect of the subsidy.

11/ Hamilton (1986b) analyses the economics of tender bids with an application to Hong Kong.

12/ The Australian system of trade in quotas is detailed in Hamilton (1986a). For an analysis of the US quotas in cheese see Anderson (1985).

13/ If a quota leads to a change in market structure from one of competition to one characterized by a producer-importer monopolist, and the quota falls in the inelastic portion of the demand curve, then the quota will not be filled. There is no information about quota fulfillment rates in Japan.

14/ The domino effect worked in reverse as well since Canada lifted its quota shortly after the US did.

15/ In the US case Yoffie's account makes it clear that the US footwear industry interests were not adequately represented in the negotiations. His account of the negotiations suggests that US negotiators favored "the" national interest.

16/ Bhagwati (1987) dubs this case the "porous protection" model to distinguish it from the more standard "rent transfer" model for VERs in differentiated products. The ineffectiveness of restriction is also forcefully made in Baldwin (1982).

17/ Footwear technology at the micro level is described in Boon (1980). His visits to factories in Spain and Mexico and his comparisons with developed countries suggest similar choice of technique. Boon also shows (chp. 3) that at all observed factor price ratios across countries machines operated solely on human energy were obsolete in the early seventies.

18/ The categories correspond to the following SITC codes: Rubber and Plastic (85101); Leather (85102), other (85103-5). It is unfortunate that data does not allow us to construct a nonrubber footwear category, since such a category would approximate more closely the footwear category most subject to NTBs.

19/ 1981 is excluded from the samples years of restrictionism because it corresponded the first year of recession and it is believed that NTBs were no longer binding. See Hamilton (1986a).

20/ "Other footwear is an aggregation of the following three footwear categories: wood & cork; footwear NES (i.e. mostly parts); and gaiters. In this group gaiters accounted for 10% of LDC exports in 1977 and parts 50%. Up until 1980 parts increased 3.75 fold and wood & cork 2.75 fold so both categories shared equally. However the second surge during 1981-82 was completely dominated by parts as wood & cork exports returned to their 1977 level.

21/ This comparison is made by Yoffie in his study of the negotiations of NTBs in textiles and footwear in the US case. He concludes that in both instances protectionism only temporarily slowed market penetration.

22/ When the US negotiated VERs with Korea and Taiwan, 25% of domestic nonrubber footwear sales was accounted for by imports from these two countries. The US negotiated for 1977 a 25% decline in the volume of nonrubber footwear imports from 1976 levels for both countries and a 2% yearly increase in volume for the following four years.

23/ If world trade growth is negative, then a positive (negative) residual reflects losses (increases) in market shares.

24/ In terms of equation (1); $V_i^0 = V_i^1 = \frac{V_i^t + V_i^{t+1}}{2}$

Appendix

Figure A1 shows the origin and destination of footwear trade for the footwear categories defined in the text. Note the following. First, intra-developing country footwear trade was not stimulated during the period of footwear protectionism. Second, intra-developed country trade started to decline in 1978-79. This is what one would expect from protection which renders sales in the domestic market more profitable than export sales. Third, the sharp rise in "other" footwear trade during the years when protectionism was spreading was not solely a developing country phenomenon. Hence this shift may partly reflect a change in fashion (e.g. women's boots).

Does the shift in comparative advantage reflect relative price shifts? With little success we fitted import share equations for developed countries. For all footwear our results were (t - values in parenthesis):

$$\ln m_t = \underset{(-5.38)}{-22.42} + \underset{(0.26)}{0.34 \ln P_t^{LDC}} \underset{(-0.91)}{0.36 \ln P_t^{DC}} + \underset{(4.20)}{4.02 \ln Y_t^{DC}}$$

$$\bar{R}^2 = 0.96 \qquad\qquad D\text{-}W =$$

Where $m_t \equiv \frac{M_t^{LDC}}{M_t^{DC}}$, P^{LDC} and P^{DC} are trade-weighted manufacturing wholesale price indices (expressed in dollars) and Y^{DC} is real GDP of OECD countries. The highly significant coefficient for the income term indicates that homotheticity by country of origin is rejected by the data, a result that is to be expected at this level of aggregation. Likewise, the lack of statistical

Figure A1

Footwear Trade: Origin and Destination

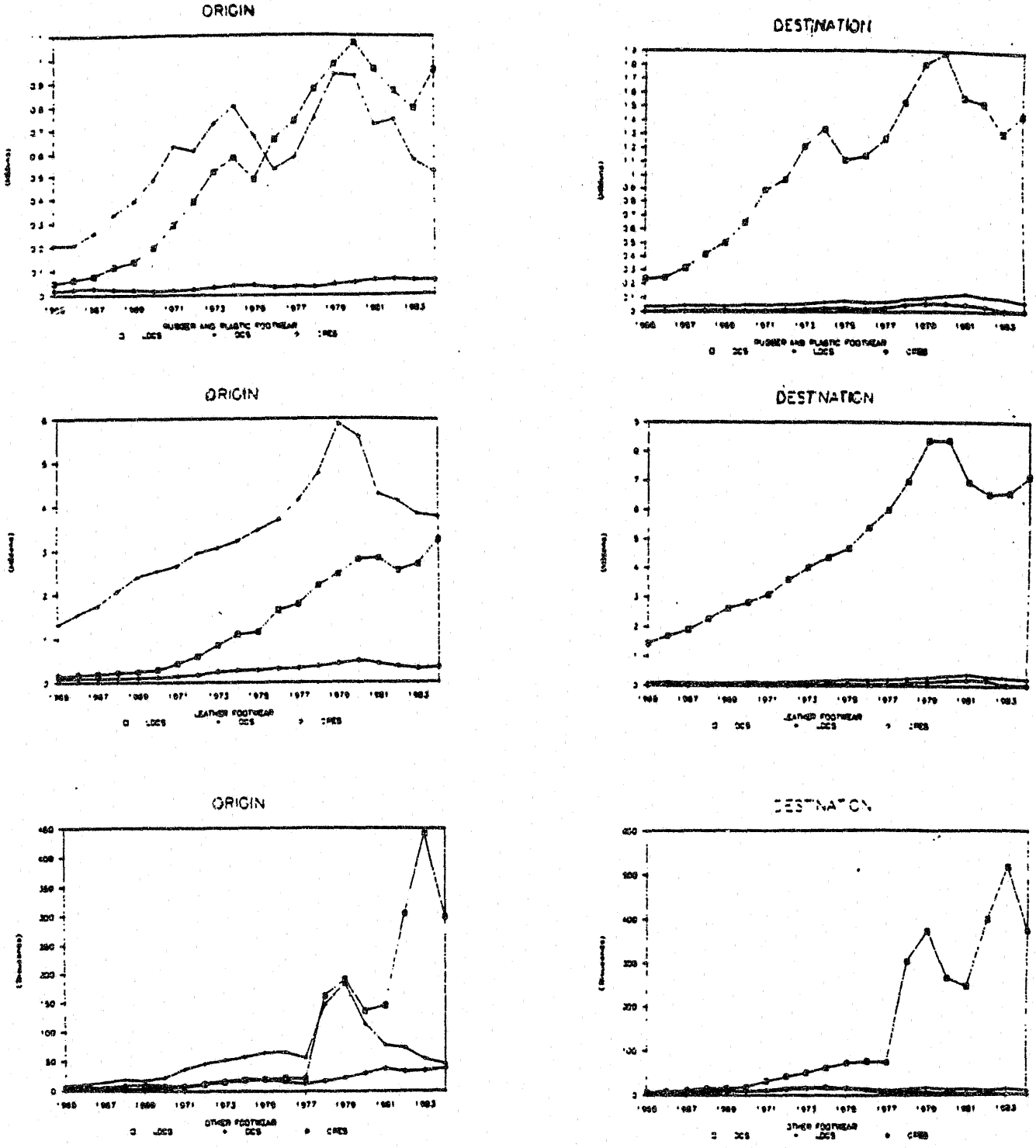

NOTES: Millions 1980 $US: Rubber, leather
Thousands 1980 $US: Other

SOURCES: See Text.

significance of the price indices in explaining the shift in comparative advantage is not surprising since the price indices are not good proxies for relative costs. Insignificance of the price indices was also found for similar regressions for each of the three footwear categories.

References

Anderson, J. 1985. "The Relative Inefficiency of Quotas: the Cheese Case," American Economic Review, pp. 178-90.

Aw, B. and M. Roberts. 1986. "Measuring Quality Change in Quota Constrained Markets: The Case of US Footwear," Journal of International Economics.

Aw, B. and M. Roberts. 1987. "Price and Quality Level Comparisons for US Footwear Imports: An Application of Multilateral Index Numbers." Mimeo. Pennsylvania State University.

Bark, T. and J. de Melo. 1987a. "Export Mix Adjustment to the Imposition of VERs: Alternative Allocation Schemes," DRD Discussion Papers No. 214, World Bank.

Bark, T. and J. de Melo. 1987b. "Export Quota Allocations, Export Earnings and Market Diversification." Mimeo. World Bank.

Boon, G. K. 1980. Technology and Employment in Footwear Manufacturing. The Netherlands: Sijthoff and Noordhoff.

Bhagwati, J. 1987. "VERs Quid Pro Quo DFIs and VIEs: Political-Economy-Theoretic Analysis," International Economic Journal, 1(1), pp. 1-15.

Falvey, R. 1979. "The Comparison of Trade Within Import-Restricted Categories," Journal of Political Economy, pp. 1142-65.

Hamilton, C. 1985. "Economic Aspects of Voluntary Export Restraints" in D. Greenwawy, ed., Current Issues in International Trade. London: Macmillan.

Hamilton, C. 1986a. "The Rise and Fall of Footwear Protectionism." Mimeo. World Bank.

Hamilton, C. 1986b. "An Assessment of Voluntary Restraints on Hong Kong Exports to Europe and the USA," Economia, pp. 339-50.

Hamilton, C. 1986c. "The Upgrading Effects of Voluntary Export Restraints," Review of World Economics, pp. 358-64.

Hufbauer, G., D. Berliver, K. Elliott. 1985. Trade Protection in the US: 31 Case Studies. MIT Press.

Leamer, E. and R. Stern. 1970. Quantitative International Economics. Boston: Allyn and Bacon.

Morkre, M. and D. Tarr. 1980. "Effects of Restrictions on United States Imports: Five Case Studies and Theory." USFTC, Bureau of Economics, Washington, D. C.

Nogués, J., A. Olechowski, and A. Winters. 1986. "The Extent of Nontariff Barriers to Industrial Countries' Imports," World Bank Economic Review, 1(1), pp. 181-99.

Rodriguez, C. 1979. "The Quality of Imports and the Differential Welfare Effects of Tariffs, Quotas, and Quality Controls as Protective Devices," Canadian Journal of Economics, pp. 439-49.

Takacs, W. 1978. "The Non-Equivalence of Tariffs, Import Quotas, and Voluntary Export Restraints," Journal of International Economics, pp. 565-73.

Takacs, W. 1986. "Import Quota Permit Auctions: An Analytical Approach and Discussion of Issues." Mimeo. Washington, D. C.: IIE.

Yoffie, D. 1983. Power and Protectionism. Columbia University Press.

Some Recent DRD Discussion Papers

280. Labour Allocation Across Labour Markets Under Different Informational Schemes and the Costs and Benefits of Signalling, by O. Stark and E. Katz.

281. Mobility, Skill and Information, by O. Stark and E. Katz.

282. Labour Mobility and Intrafamilial Income Transfers: Theory and Evidence from Botswana, by O. Stark and R. Lucas.

283. Labour Migration, Income Inequality and Remittances: A Case Study of Mexico, by O. Stark, J.E. Taylor and S. Yitzhaki.

284. Female Labour Mobility, Skill Acquisition and Choice of Labour Markets: Theory and Evidence from the Philippines, by O. Stark and J. Lauby.

285. Market Structure, Jobs, and Productivity: Observations from Jamaica, by P.B. Doeringer.

286. Coordination of Taxes on Capital Income in Developing Countries, by P.B. Musgrave.

287. The Effects of Labor Regulation Upon Industrial Employment in India, by P.R. Fallon.

288. Factor Substitution in Production in Industrialized and Less Developed Countries, by D. Demekas and R. Klinov.

289. On the Effect of Subsidies to Basic Commodities on Inequality in Egypt, by S. Yitzhaki.

290. Implementing a Computable General Equilibrium Model on GAMS - The Cameroon Model, by T. Condon, H. Dahl, and S. Devarajan.

291. Effects of Exchange Rate Changes in Developing Countries, by B. Balassa.

292. Public Enterprise in Developing Countries: Issues of Privatization, by B. Balassa.

293. Inter-Industry and Intra-Industry Specialization in Manufacturing Goods, by B. Balassa and L. Bauwens.

294. The International Monetary System and Exchange Rate Policies in the Developing Countries, by B. Balassa.

295. The Economics of Divestiture: Ex Ante Valuation and Ex Post Evaluation, by L.P. Jones, P. Tandon and I. Vogelsang.

296. The Labor Market in Zimbabwe: Historical Trends and an Evaluation of Recent Policy, by P.R. Fallon.

297. Costs and Returns to Liberalization - The Jamaican Case, by R. Klinov.