33515
v 6

The World Bank

Bank-Netherlands Water Partnership

Seawater and Brackish Water Desalination in the Middle East, North Africa and Central Asia

Final Report

Annex 5

Malta

December 2004

DHV Water BV, the Netherlands

BRL ingénierie, France

Table of Contents

List of Appendices

List of Tables

List of Figures

Map of Malta


Gozo
Kemmuna
Malta
Mediterranean Sea
Mediterranean Sea
Fliegu ta' Ghawdex
Fliegu ta' Malta
Valletta
Malta
National capital
Built-up area
Road
0 1 2 3 Kilometers
0 1 2 3 Miles
Base 800013 (A03280) 9-84

Summary

Water Resources. There are no rivers of any significance in Malta. The rainfall mostly infiltrates into the groundwater aquifers. The groundwater is taken from 95 boreholes in Malta and 43 boreholes in Gozo. Some water is recovered from the sewage treatment plant and used for irrigation and industrial activities.
There is a water deficit in Malta. It occurs especially in summer when there is a great demand from the farmers for their irrigation, but also from the tourism sector to satisfy the needs of the many tourists that flock to the island. In order to bridge the gap between supply and demand has Malta has long ago started desalination of seawater.
The increased availability of more potable water (due to desalination) has greatly facilitated the development of the island in recent years. Tourism and industry have developed and at the same time, the quality of life of the population has been enhanced by allowing a bigger per caput water use.

Energy. Malta has no fossil fuel resources of its own and to date imports heavy fuel oil, coal and gas oil to generate electrical power. Moreover, Malta is not connected to any existing electricity grid in Europe or Africa. Harvesting of renewable energy, though not directly for desalination is receiving attention, not least by the country's obligation as a new EU member. There is no great potential in the application of renewable energy to desalination in Malta.

Institutions. The Water Services Corporation (WSC) is responsible for the supply of water to the population. It is an independent body wholly owned by the government.
The WSC has over the years carried out a rigorous programme of reducing water losses. This has been very successful. The program started with establishing exactly where the network was located. Existing drawings were found to be totally inadequate. Following this, a leakage reduction programme was instituted. This is on going.
Malta Desalination Services Ltd. (MDS), which was set up in 1997 as a subsidiary to the Water Services Corporation, is charged with the design, construction, operation and maintenance of the desalination plants.

Water Supply Sector Performance.
Water conservation is high up on the agenda in Malta. Education programmes were started at primary schools. Tariffs were set in different ways; the subsidy that was given in the past was almost scrapped. Rather now water is subsidised with a view to the social needs of certain groups in the community. There is an effective programme for leakage control. The greatest emphasis was placed the control of losses but an understanding of metering accuracy was also obtained through investigations. The population is encouraged to use private wells and to apply that water for toilet flushing and gardening, so that first class water can be freed from that.

Current Status of Desalination. There are three desalination plants in operation: Lapsi and Cirkewwa, Pembroke. They are all run by the Malta Desalination Services. All are reverse osmosis plants using sea water from beach wells. The first two seawater plants were initially operated by the company that constructed them under a management contract with the WSC. By the time the last plant was being considered, the Maltese decided to take over the running of the plants themselves.
Up until the Pembroke plant was commissioned demand was racing ahead of supply and the island had a permanent water crisis. This was due to the continuing success of the tourist industry and the associated prosperity which it brought to the citizens of Malta. The building of Pembroke provided the government with some breathing space and the opportunity of taking stock. Water demand was continuing to increase. The government was faced with the possibility of having to install more desalination capacity or of attempting to modify consumption. The leakage control programme paid of and no new desalination plant was needed for the time being.

Private Sector Participation.
After completion of the construction of the desalination plant the government awarded a management contract to the company that built the plants. This contract ran for 15 years from 1982. Upon expiration of the contract the government felt that the local staff had learned sufficient about all aspects of plant operations and decided it was more economic to manage the plants themselves. A government owned company was set up for this purpose. Thus there is at present no private sector involvement in the desalination sector in Malta.

Capacity Building.
The Malta Desalination Services successfully runs the desalination plants in Malta. It also designs, manufactures and maintains plants for some of the larger hotels on the island. It also has undertaken major plant refurbishment and modifications. MDS has also undertaken major development projects to reduce energy costs and improve operational efficiency. All training and capacity building is done in-house.

Environmental Impact.
Malta has in place comprehensive environmental legislation. It has an Environmental Protection Act, issued in 2001, with a further 74 associated legal notices. Enforcement of this legislation is now of utmost importance. EIA is fully operational in Malta.

Future Plans for Desalination. There are no current plans for any new seawater desalination plants in the immediate future. Upgrading and improvement of existing plants will continue. The leakage control programme is ongoing and success here will in part match increase in consumption. The government is also pursuing other initiatives to reduce or moderate water consumption.

1 Country Profile

Malta is an archipelago consisting of three inhabited islands, Malta, Gozo and Comino and two other uninhabited islands, Cominotto and Filfla. The Maltese Islands are situated in the middle of the Mediterranean Sea. The total area of the islands is 316 km^2 (Malta 246, Gozo 67, Comino 2.7). The longest distance in Malta from south-east to north-west is about 27 km and, at its widest point in an east-west direction, measures 14.5 km. Malta is characterized by a series of low hills and slopes towards the North East and low lying land to the South East. The highest point in the islands is 252 m. Malta's coastline has many harbours, bays, creeks, sandy beaches and rocky coves.
Malta has a very attractive, typical Mediterranean climate, offering warm dry summers and mild winters. The island enjoys 300 days of sunshine each year and the average rainfall is 590 mm. Average temperatures range between 12°C in the winter months to around 30°C during the summer. The hottest period is from mid-July to mid-September. The island is seldom too hot even in the height of summer as hot summer days and nights are regularly tempered by cool breezes from the sea.

The islands have a combined population of approximately 400,000. The population density of Malta, which stands at 1,174 persons per sq. km, is one of the highest in the world. Maltese society is homogenous, having its own identity and language. Some 97% of the population are Roman Catholic which is the state religion; however there is full freedom for all religious beliefs. The natural population growth has in recent years been supplemented by the arrival of Maltese who had previously emigrated to America, Canada, Australia and the United Kingdom. Maltese, the national language, results from an interaction and fusion of North African Arabic and the Sicilian form of Italian, and is written in Latin script. Maltese became an official language of Malta in 1934. English is the other official language and is spoken fluently by most Maltese citizens along with Italian. Business correspondence is mainly in English. Maltese society is stable and this may largely be attributed to the following factors: strong family ties and the extended family system, high levels of church attendance and strong value systems, good standard of living, and low unemployment. Although Maltese society is undergoing a process of modernization, the persistance of old values make Malta an attractive permanent or temporary base for many visitors from abroad, who seek a secure and comfortable way of life.

Due to the small size of the Maltese Islands, the small and terraced land holdings, the shortage of rainwater and the poor quality of the soil, agriculture offers very limited opportunities. 40% of the land is currently under cultivation and the main crops include potatoes, tomatoes, citrus fruits and grapes. Although Malta exports potatoes, flowers, seeds, plants and fish, it is a net importer of food. In recent years, the local fish farming industry has been expanding which has encouraged foreign companies to set up shop in Malta. Within just five years, Malta's output has reached 1 million kg of fish per year and it estimated that the output for 1996 will reach 2 million kg.

Malta has traditionally been viewed as a country with very limited natural resources, but this depends on how natural resources are defined. Malta's lack of mineral resources is compensated by its wealth of climatic resources. With recent developments in science and technology, Malta now has the opportunity to tap the abundance of sun and wind as alternative energy sources. These resources, being renewable, are in fact far more valuable than finite, mineral resources. Surrounded by the sea, Malta also has at its disposal a vast supply of marine and coastal resources. Its strategic location at the centre of the Mediterranean makes it not only an important military axis but also a point of convergence of cultures and religions. This is reflected in Malta's wealth of archaeological and cultural resources and the strong community value system which makes the Maltese not only highly resourceful but also particularly skilled in adapting to and promoting change. Malta's secure yet dynamic environment is perhaps its most important resource, attracting foreign investors in every sector as well as those international organizations seeking an inspiring meeting place or a secure base of operations.

Table 1.1 A Statistical Profile of Malta

Topic	
Geographical region	Mediterranean Sea
Area	316 km2
Climate	Mediterranean with mild rainy winters and hot, dry summers
Natural resources	limestone, salt
Land use: arable land	31.25 %
permanent crops	3.12 5
other	65.62 %
Irrigated lands	20 km2
Environment - current issues	very limited natural fresh water resources
Population	400,000 (2003)
Population growth	0.73 % (2003)
Languages spoken	Maltese, English
Capital city	Valletta
Inhabitants	
Other cities, inhabitants	
Economy	foreign trade, manufacturing, tourism
GDP	USD 7 billion
GDP per capita	USD 17,000
GDP composition	agriculture - 2.8 % industry - 25.5 % services - 71.7 %
Industries	tourism, electronics, ship building, food and beverages, textiles, footwear, tobacco
Agriculture	potatoes, grapes, wheat, barley, citrus, flowers, milk, poultry, eggs
Administrative divisions	none
Water Resources/Capita	131 m3
Energy Consumption/Capita	7,140 kWh
Minimum wage (annual)	5,300 ECU
Level of unemployment	3.4 %

Source: CIA - The World Factbook 2002 and 2003

2 Water Resources

2.1 Water availability

There are no rivers of any significance on either Malta or Gozo. The rainfall mostly infiltrates into the groundwater aquifers. There are two types of aquifers: perched aquifers and mean sea level aquifers. The perched aquifers are very small. They are almost exclusively used by the farmers to irrigate their crops. The water is abstracted from these aquifers through springs and underground galleries. The flow is however seasonal, intermittent and highly variable. They normally dry up in spring.

The main aquifer lies in the pores of the limestone at mean sea level. It owes its existence to the fact that every winter rainfall adds more freshwater to the underground storage than can be dissipated by direct discharge around the coast to the sea. The water is extracted through a system of galleries situated in the central axis of the island. 36 km of galleries yield an average of 13.2 MCM per year. Over 130 boreholes tap into the aquifer; their annual yield is 6.6 MCM. The salinity of the water in this aquifer has increased. This is mainly due to over abstraction. Pollution from farming activity is a cause for concern in certain areas.
Although 19.8 MCM is tapped annually the safe yield with an acceptable TDS of around 800 ppm is rather in the order of 14 MCM.

2.2 Water demand

Water production capacity in Malta and Gozo is approximately 145,000 m^3 per day. Of this some 58% is produced by seawater desalination using reverse osmosis and 42% from groundwater sources. The groundwater is produced from 95 boreholes in Malta and 43 boreholes in Gozo. Some water is recovered from one sewage treatment plant and used for irrigation and industrial activities. So called first class supplies in Malta are for domestic supply, hotels, small industries and the commercial activities including offices. All of the urban population have access to safe drinking water, sanitation and health services.
Domestic demands are 15 MCM per year, the other first class demands amount to 7 MCM per year. Farmers do not use first class supplies. They have normally their own ground water boreholes from which they tap 6.6 MCM per year. In winter the demand is negligible, in summer it can reach 40,000 m3 per day.
Treated waste water is also used in Malta. The sewage treatment plant provides 1.3 MCM per year. This is applied in the agricultural and industrial sectors.
The total water demand amounts to nearly 30 MCM per year.

2.3 Water balance

As stated above 14 MCM of water is available for Malta from ground water sources. Some 50 % of this amount can become available as second class water after wastewater has been treated appropriately. This would bring the total available water to 21 MCM per year. This is less than the total demands.
The water deficit occurs especially in summer when there is a great demand from the farmers for their irrigation, but also from the tourism sector to satisfy the needs of the many tourists that flock to the island. Storage of water, if at all possible, is a too expensive solution for Malta. In order to bridge this gap has Malta has long ago started desalination of seawater.

In a situation of competing for scant resources where timely investments could not always be made and where domestic supplies needed to be fulfilled first water management practice in Malta was not always guided by the concepts of integrated management of the resources as they are done

today. There was also hardly an incentive to conserve water, this was fed by the fact that first class water was even subsidised.
When the situation grew out of hand the Government decided that more expensive solutions needed to be found. Desalination of sea water was the most certain option. Since then four large desalination plants have been built.
Other means and projects to conserve water were also used. Education programmes were started at primary schools. Tariffs were set in different ways; the subsidy that was given in the past was almost scrapped. Rather now water is subsidised with a view to the social needs of certain groups in the community. There is an effective programme for leakage control. The greatest emphasis was placed the control of losses but an understanding of metering accuracy was also obtained through investigations. The population is encouraged to use private wells and to apply that water for toilet flushing and gardening, so that first class water can be freed from that.

2.4 Water re-use

Some 15 % of the sewage produced in Malta is now being treated in the sewage treatment plant in the south of the island. It is used in some industrial processes and for irrigation. The remainder is discharged into the sea. However given the strain on the water resources it is now being looked at how all wastewater can be treated and used. Policies on the application of sewage are being developed. Health considerations are of paramount importance in this respect.
There are plans to significantly increase this supply when new sewage treatment plants are brought into operation. The possibility is being considered of treating recovered sewage water to a higher standard and injecting it back into the ground to re-charge the aquifer.

2.5 Desalination

Though desalination is an expensive way of obtaining potable water, it has enabled Malta to bridge the gap between supply and demand. The increased availability of more potable water (due to desalination) has greatly facilitated the development of the island in recent years. Tourism and industry have developed and at the same time, the quality of life of the population has been enhanced by allowing a bigger per caput water use.

3 Water Resources Management

In Malta the Water Services Corporation (WSC) is responsible for the supply of water to the population. It is an independent body wholly owned by the government.
The WSC has six departments. They deal with Groundwater operations, Distribution operations, Distribution Works, Technical Services. There is a separate department of the WSC responsible for all operations in Gozo.
The WSC has over the years carried out a rigorous programme of reducing water losses. This has been very successful.

Malta Desalination Services Ltd. (MDS) which was set up in 1997 as a subsidiary to the Water Services Corporation is charged with the design, construction, operation and maintenance of the desalination plants in Malta. MDS is presently in charge of the operation of four desalination plants. Three seawater desalination plants are at Ghar Lapsi, Cirkewwa and Pembroke and a brackish water plant at Marsa. The latter plant is no longer in operation.

4 Desalination

4.1 Background

Throughout its history Malta has always been short of water. In modern times desalination has been used to supplement the natural water supply which is from groundwater.

The Maltese have been involved in seawater desalination for over a hundred years and have played an important role in the development of desalination technology. A small seawater distillation plant was installed on the island in 1886. The building associated with this project is still standing. However, it is only the last forty years that are really relevant. During the sixties, tourism to Malta from Europe started to develop. In order to meet with the increased demand from this and from domestic pressure the Government decided to invest in seawater desalination using newly developed technology. At that time the only viable technology was the newly developed MSF distillation process which had been pioneered in Kuwait and the Channel Islands by Weir Westgarth, a UK company. This first plant was followed by three more units, each of 4540 m^3/day, the last being completed in 1969. Further demand in the seventies was met from borehole drilling in the aquifer. These plants were owned by the government and operated by staff in the Water Department.

Water demand continued to grow partly because of increased tourism. To meet the continuing increase in demand the Government decided in 1981 to invest in more desalination capacity. Experience in Malta with the MSF process had not been good. The units suffered from severe corrosion problems, were heavy energy uses and had high maintenance costs. The water cost using this technology was therefore high. The newly developed RO process used half the energy and offered the promise of lower maintenance costs. Consequently the Government decided to invest in the construction of a 20,000 m^3/day RO plant which was installed at Ghar Lapsi on the south side of the island of Malta. As the Water Department staff had no experience with this new technology a contract to operate the plant for 5 years was negotiated with the company that built the plant. In 1992 a government owned corporation, Water Services Corporation (WSC) was formed to supervise the water production and to manage the distribution system throughout the country. WSC was also responsible for billing. In 1988 a further plant at Cirkewwa of 18,600 m^3/day was brought into operation. Lastly between 1991 and 1994 another plant at Pembroke of 54,000 m^3/day was commissioned in two equal phases of 27,000 m^3/day each. A brackish water desalination plant of 4500 m^3/day was installed at Marsa in 1983. These are listed in Table 4.1.

For strategic reasons, the three major plants are located at three different parts of the island. Malta is in the centre of a major marine thoroughfare and any major oil spillage could result in damage to the desalination plants. By locating them at different points on the island this risk is minimised.
The water from the RO plants is blended with brackish ground water and distributed through the network to the entire island. About 50% of the potable water in Malta is from desalination. Desalinated water is estimated to cost around USD 0.72 per m^3.

4.2 Present Situation

In 2000/2001, desalination contributed 49.3% (16.6 million m^3) of the water supplied into the public distribution system. The balance is from groundwater sources. Currently the WSC through its subsidiary company Malta Desalination Services (MDS) Ltd. operate three seawater reverse osmosis plants and one brackish water reverse osmosis plant. Malta today has one of the longest and best track records of reverse osmosis plant operation in the Mediterranean region with high output levels and reliability

Figure 4.1. Plant location on Malta

There are three desalination plants in operation: Pembroke, Lapsi and Cirkewwa (according to the SoER, 2002, there are four, including Marsa, a smaller brackish water plant that is currently not in operation due to problems with the feed water). They are all run by the Malta Desalination Services. All are Reverse Osmosis plants (Table 4.1).

Table 4.1. Characteristics of desalination plants in Malta (SoER, 2002)

Location	Commissioned	Feedwater type	Nominal Capacity m^3/day	Number of trains	Recovery %
Lapsi	1986 – 20,000m^3 /day 1986 increased to 24,000 m^3/day	Seawater	24,000	12 x 2,000 m^3/ day	33
Marsa	1983	Brackish water	4,500	1 x 4,500 m^3/ day	70
Cirkewwa	1989	Seawater	18,600	2 x 3,000 m^3/ day 3 x 4,200 m^3/ day	42
Pembroke	Phase 1 (17,600 m^3/day) in 1991 Phase 2 (further 8,800 m^3/day) in 1993 Completion – 1994	Seawater	54,000	6 x 4,400 m^3/ day 6 x 4,600 m^3/ day	45

The first two seawater plants were operated by the company that constructed them under a management contract with the WSC. By the time the last plant was being considered, the Maltese decided to take over the running of the plants themselves. A new company called Malta Desalination Services Ltd (MDS) was set up. This is wholly owned by WSC and is structured like a private sector company. MDS currently runs all four plants on the island.

Apart from the plants operated by MDS there are a number of small plants scattered around the island owned and operated by the private sector for industrial use or to supply hotels. As part of the planning consent, Maltese government encouraged new large hotels to have their own desalination plants. There are also desalination plants at the two powers stations to supply boiler feed make-up water. A complete list of the desalination plants on Malta is given in Appendix A.

Up until the Pembroke plant was commissioned demand was racing ahead of supply and the island had a permanent water crisis. This was due to the continuing success of the tourist industry and the associated prosperity which it brought to the citizens of Malta. The building of Pembroke provided the government with some breathing space and the opportunity of taking stock. Water demand was

continuing to increase. The government was faced with the possibility of having to install more desalination capacity or of attempting to modify consumption.

A campaign to reduce unaccounted losses and demand was embarked upon. The program started with establishing exactly where the network was located. Existing drawings were found to be totally inadequate. Following this, a leakage reduction programme was instituted. This is on going. Much of their network was old and needed to be replaced. Apart from leakage, a major source of loss was from un-metered usage. Research into metering was carried out. The outcome of this was the replacement of existing meters by better quality meters (Class C to Class D). There is now an on going program of meter maintenance and replacement. They have also instituted tariff reforms that have further reduced demand. Details of all of this work have been recorded and details published in various WSC annual reports.

Figure 4.2 Simple flow diagram of Malta RO process.

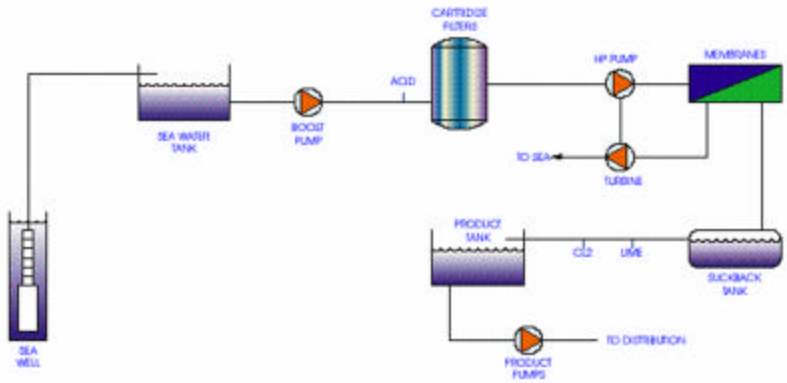

Figure 4.2 is a simplified diagram illustrating the main features of RO in Malta. The success of the RO process to a large extent hinges on the quality of water supplied to the membranes. Malta is particularly fortunate in that the entire island is composed of a porous limestone rock. This has allowed the Maltese to draw seawater feed from wells in the rock adjacent to their desalination plants. The porous rock acts as a filter saving the Maltese the cost of having to do this in multi-media filters.

Figure 4.3 Beach Well-field

Figure 4.4 Beach-well Pump-house

These wells vary in depth from 30-60 meters and are 43 cm in diameter. Submerged pumps are used to pump the naturally filtered seawater into a feed storage tank. Each well provides between 4000 and 6000 m^3/day of high quality feed-water. The quality of the seawater feed is so good that it

has almost eliminated any further pre-treatment. In addition the life of the membranes is extended. 30% of the membranes in the original plant at Lapsi are still in operation 20 years later.Figs. 4.3 and 4.4 show parts of the well field system at Pembroke. The wells are connected to a collection header visible in the background. The Pembroke plant operates the membranes at 80 Bar with 42-45% of the feed being converted to potable water.

In their efforts to reduce water costs, WSC have striven to reduce the costs of desalination by all means at their disposal. Of particular interest is the reduction in energy that has been achieved by retrofitting energy recovery devices instead of the original reverse pumps that were fitted in the original design. These include Pelton wheels and pressure exchangers developed by ERI. MDS now has running a 4,800 m3/day unit with a specific energy consumption of 3.2kWh/m^3 using ERI pressure exchangers (Figure 4.5). This is excellent for such a large unit. This has been running for 3 months and if it continues to function satisfactorily, it is planned to modify all units on the island as funds permit. MDS have also constructed and tested a 100m^3/day unit with and energy consumption of 2.4kWh/m^3. They currently supply and maintain similar small units to various hotels on the island.

Figure 4.5 Pressure Exchangers at Ghar Lapsi

4.3 Ongoing situation

There is an ongoing programme to re-engineer plants with more efficient equipment where this can be shown to be cost effective. Also the programme to reduce the unaccounted-for losses continues. Total leakage is currently around 25%. The target figure is 15%. Plans are now being made to treat ground water to improve water quality at the consumer's tap and to recover wastewater to meet increased future demand.

4.4 Conclusion

The Maltese have learnt valuable lessons that may be of interest to others. Malta is not a rich country. It has no indigenous sources of energy. Consequently it has been of the greatest importance to have desalination plants which were cheap to construct and to operate. This it has achieved. Tariff changes were a political issue of great sensitivity. It has instituted tariff reforms that have resulted in reduced water consumption with no hardship to the less affluent sections of the community.

5 Energy

5.1 Conventional Energy

Malta has no fossil fuel resources of its own and to date imports heavy fuel oil, coal and gas oil to generate electrical power. Moreover, Malta is not connected to any existing electricity grid in Europe or Africa. The national organization responsible for power generation is the Enemalta Corporation, a state-owned entity set up in 1977, which is committed to progressive, efficient and safe energy management and environmentally-friendly power generation. At present, the total generating capacity stands at 466 MW, produced by two oil-fired power stations, based at Marsa and Delimara, generating 195 MW and 245 MW respectively. The Delimara power station, with the provision of two gas turbines, has a relatively high level of efficiency. The Corporation's fifteen year energy plan for the Maltese Islands (1994-2010) includes plans currently underway for further extension of generating capacity and the reinforcement of the transmission and distribution network. Increased energy efficiency and the development of alternative, renewable sources of energy are dual national priorities which were tackled in a National Conference entitled *An Energy Policy for the Year 2000* which was organized by the Malta Council for Science and Technology in June 1996.

5.2 Renewable Energy

Harvesting of renewable energy, though not directly for desalination is receiving attention, not least by the country's obligation as a new EU member. There is no great potential in the application of renewable energy to desalination in Malta. Malta has a good solar energy resource by virtue of its position in the Mediterranean. Solar energy for desalination would require large tracts of land to be set aside for energy collection if meaningful quantities of water are to be produced. Malta is a very small island, heavily populated and this would be unacceptable. There are a small number of wind driven water pumps in operation. There are also a small umber of PV powered communication relay stations.

6 Capacity building

The government awarded a management contract to the company that built the desalination plants. This contract ran for 15 years from 1982. Upon expiration of the contract the government felt that the local staff had learned sufficient about all aspects of plant operations and decided it was more economic to manage the plants themselves. For this purpose a commercially structured, but fully Government-owned company was created (Malta Desalination Services - MDS). MDS now successfully runs the desalination plants in Malta. It also designs, manufactures and maintains plants for some of the larger hotels on the island. It also has undertaken major plant refurbishment and modifications. MDS has also undertaken major development projects to reduce energy costs and improve operational efficiency. This is a step beyond private sector involvement, which is rather unique to the knowledge of the Consultant, but can be compared to plans of the Jordan government to take over the operations of the water supply system, which is currently run by a private operator under a management contract.

From one point of view this is the reverse policy to that taken in Cyprus. In Cyprus there is a high probability that when the current operation contract ends after 10 years, that the government will ask the private sector to bid for extended management contracts to run the desalination plants. Should the Maltese government decide to follow a similar route, it would be relatively simple to transform MDS into three independent desalination companies feeding water into the trunk mains which would remain in government control.

7 Environmental Issues

7.1 Environmental Impacts

As indicated in the SoER, 1998, in spite of its limited dimensions, the Maltese coastline provides 190 km of highly varied topography, geology, numerous sites of significant ecological importance such as sea-cliffs, sand dune (remnants), saltmarshes, and coastal clay slopes, as well as a rich and diverse wildlife. Moreover, the coastal areas are being exploited by multi users (often conflicting in nature) including touristic establishments, sports amenities; fish farming, desalination plants, urbanisation and others.

Malta has made great strides in its approach toward accession with the European Union; it will be one of the new Member States as of 2004, and therefore it should have completely harmonised its environmental legislation, and the methods by which the legislation is implemented, by this time.

The SoER (2002) discusses issues associated with seawater desalination in detail (pages 413-418). This document is referenced several times in the following sections.

The below impacts are described in general in Chapter 8 of the Main Report; these impacts are also valid for the situation in Malta. More specific impacts for the situation in Malta are presented in the following sections. In Malta, impacts on tourism and the landscape from a visual perspective should be examined carefully before proceeding.

7.1.1 Operational Stage

Energy Use and Air Quality
In 2000/2001, the energy demand to produce and distribute desalinated water was 103.562 MWh, amounting to 8.8% of the total energy sales of Enemalta. The emissions of pollutants (contributing to air pollution) and CO_2 (contributing to global warming) that result from the extra power production would add to the country's total emissions. Malta signed the Kyoto Protocol in 1998 and ratified it in 2001 (UNFCCC, 2003).

Marine Environment
An indication of the chemicals used at the desalination plants on Malta is provided in the table below. A number of these are toxins and at certain levels could impact on the environmental health of the seabed (organisms in benthic and pelagic communities).

Table 7.1 Chemicals used in Malta desalination plants in 2000/2001

Chemicals Used	Pembroke	Cirkewwa	Lapsi	Marsa	Total
Ammonia Kgs	2,606	1,201	955		4,762
Citric Acid Kgs	10,856	4,314	2,922		18,092
Caustic Soda Kgs	325	125	150	1,286	1,886
Sodium Bisulphite Kgs	2,000	600	1,125	1,140	4,865
Ultrasil Detergent Kgs	3,341	1,248	1,478		6,067
Polyvinyl methyl ether Kgs	63	20	20		103
Tannic acid Kgs	310	182	86		578
Lime Kgs	282,400	57,350	61,932		401,682
Sulphuric Acid Kgs	1,346,600	424,233	238,505	32,938	2,042,276
Chlorine Cl_2 Kgs	6,111	3,808	2,420	639	12,978

In Malta it is not clear exactly what the impacts of brine release are on benthic communities;

however, these are being studied (SoER, 2002). A Maltese university has carried out studies that examined brine discharges from desalination plants there which concluded that the brine mixed quickly and that few environmental impacts were to be expected. Brine discharges for the desalination plants in Malta are seen in the following table:

Table 7.2 Brine discharges from Maltese desalination plants, 2000/2001

	Quantity - m^3	Conductivity $uScm^{-1}$
Pembroke	12,997,959	96,837
Cirkewwa	5,467,197	89,364
Lapsi	5,787,438	81,689
Marsa	16,180	52,663
Total	24,268,774	

Beach wells should only be used in areas where the impact on aquifers has been studied and saltwater intrusion of freshwater aquifers will not occur. In Malta, all desalination feedwater comes from beach wells: seawater is extracted from coralline limestone, which produces water that is free of silt and organic material (MDS, ca. 2000).

Increased Development
The potential long-term impacts of extending the life of projects that are presently intended for short-term use should also be considered. However, Malta is likely looking to increase its tourism sector; as in Cyprus, water is needed for this development goal.

7.2 Recommendations for Mitigation

7.2.1 Institutional and Management Mitigation

Proper enforcement of any existing environmental or water laws or regulations
Malta has in place comprehensive environmental legislation. It has an Environmental Protection Act, issued in 2001, with a further 74 associated legal notices. Enforcement of this legislation is now of utmost importance.

The Malta Environment and Planning Authority has three environmental "technical" units: the Pollution Control Section, the Waste Management Section and the Biodiversity Protection Section. In addition, the department has a number of "horizontal" sections, dealing with Legal and Multilateral issues, Environment Impact Assessment, Communications and Administration. Moreover, the Authority in conjunction with the Department of Industry and the University of Malta set up the Cleaner Technology Centre (CTC), which is concerned with the promotion of cleaner technologies in local industry.

EIA is fully operational in Malta.

Effective water resources management planning with environmental aspects
It is not mentioned by name, but in the document SoER (2002), it is very clear that water resources management and an associated plan are in play.

Properly developed environmental institutions; ensuring that environmental responsibilities are not divided over too many institutions; clear mission statements regarding environment for involved institutions
The Environmental and Planning Authority was formed when the Environmental Protection Department merged with the Planning Authority to form a policy formulating, regulating and monitoring body that, in collaboration with other agencies, endeavours to achieve sustainable

development in Malta. It is clear that much thought has gone into the development of these institutions, and likely further development is unnecessary.

The Water Services Corporation was set up in 1992 (Chapter 355), with the mandate to be responsible for all aspects of production, sale and distribution of potable and non-potable water, treatment and disposal of wastewater, reuse of stormwater, among others. As well, the Malta Resources Authority Act was set up in 2001, with its mandate to perform regulatory functions regarding natural resources in Malta, including aspects of water covered in the Water Services Corporation Act. The Environment Protection Act, enacted in 2001, regulates discharges/emissions into the (water) environment. It is out of the scope of this section to remark upon how these organisations interact with one another, but notable that they have all been set up 1) under the condition of joining the EU in the short term, and 2) after having had a Ministry or equivalent in place for approximately 30 years.

Further awareness-raising for water conservation
The National Commission for Sustainable Development (provided by the Environment Protection Act) in Malta has the responsibility in general for public awareness-raising as regards sustainability issues in general. The idea of public awareness is completely integrated into the SoER (2002); most activities undertaken by the newly-formed water and environment authorities have this element built right into their mandates. It is safe to say that future activities in this field will be taken where required.

7.2.2 Physical Mitigation

For the purpose of water conservation

Use of drip irrigation for agriculture
According to EU laws, overuse of agricultural chemicals should largely be mitigated by now in Malta.

For the purpose of desalination plant mitigation

Construction
No new desalination plants are planned for Malta. The refurbishments planned at Lapsi and Cirkewwa for the next years should take the construction measures into consideration.

Operational
Energy Use and Air Quality
According to the SoER (2002), “extensive” efforts are being taken by the MDS Ltd. in order to minimise to the extent possible energy use for the RO plants. Since 1997-98, energy usage in the plants has consistently decreased per unit production, and energy recovery technologies have been incorporated (for example, Pelton turbines at Pembroke are estimated to have reduced energy use by 20%). Pressure exchangers have been planned at Lapsi and Cirkewwa plants, which are expected to reduce energy use by 20% and 12% respectively.

Marine Environment
In terms of use of pre-treatment techniques that minimize or eliminate the need for hazardous chemicals, the use of formaldehyde was recently phased out completely in Maltese desalination plants.

8 Future Developments

There are no current plans for any new seawater desalination plants in the immediate future. Upgrading and improvement of existing plants will continue. The leakage control programme is ongoing and success here will in part match increase in consumption. The government is also pursuing other initiatives to reduce or moderate water consumption.

There are plans for a two or three new plants to polish groundwater to better water quality. There are also plans to treat sewage waste water such that it can be used for irrigation with restricted usage.

9 References

1. A. Riolo, Maltese experience in the application of desalination technology. EDS Conference on Desalination Strategies in Southern Mediterranean Countries. Jerba, Tunisia 2000
2. The Development and management of desalination Operations in Malta. Robert Schembri.
3. MDS Ltd. Ca. 2000. *Beating the Drought: Sea and Brackish Water Desalination.* Brochure.
4. Ministry of Home Affairs and the Environment. 2002. State of the Environment Report for Malta.
5. Riolo, A. 2001. *Maltese experience in the application of desalination technology*. Desalination 136: 115-124.
6. Water Services Corporation of Malta, Extracts from the Water Services Corporation Annual Reports 1996-2002, 2003

Appendix A List of existing desalination plants

List of existing desalination plants

Malta											
Location	**Total Capacity m3/d**	**Units**	**Process**	**Equipment**	**Feature**	**Customer**	**Water Qual**	**User**	**Con.Year**	**Plant Supplier**	**Membrane Supplier**
Gozo	3000	1	MSF	FLASH	*Unknown	Government	SEA	MUNI	1970	BABCOCK HIT. JP	*Unknown
Mriehel	140	1	RO	MTU	*Unknown		BRACK	INDU	1976	HUBERT STAVO NL	*Unknown
	196	1	RO	MTU	*Unknown		BRACK	INDU	1979	AQUA MEDIA US	*Unknown
	100	1	RO	HFM	*Unknown	DACOUTROS	BRACK	INDU	1982	SATEC GB	DUPONT US
Ghar Lapsi	20000	10	RO	HFM	ER	Government	SEA	MUNI	1982	POLYMETRICS US	DUPONT US
Marsa	4500	1	RO	HFM	*Unknown	Government	BRACK	MUNI	1982	USFILTER US	DUPONT US
	152	1	RO	MTU	*Unknown	GENERAL SOFT DR	BRACK	INDU	1985	PWT PORTALS GB	*Unknown
Ghar Lapsi	4000	2	RO	HFM	ER/PRE	Government	SEA	MUNI	1985	POLYMETRICS US	DUPONT US
	568	1	RO	HFM	*Unknown	PANTA LESCO	SEA	INDU	1986	POLYMETRICS US	DUPONT US
	151	1	RO	MTU	*Unknown	PORTANIA	BRACK	INDU	1986	PWT PORTALS GB	*Unknown
Comino	305	2	RO	SWM	*Unknown	Hotel	SEA	TOUR	1986	VILL. MARINE US	DOW FILMTEC US
Marsa	1453	1	RO	HFM	ER	Government	BRACK	MUNI	1986	USFILTER US	DUPONT US
Tigne	15000	5	RO	HFM	ER	Government	SEA	MUNI	1986	POLYMETRICS US	DUPONT US
	550	1	ED	FM	EDR		BRACK	INDU	1989	IONICS US	IONICS US
Cirkewwa	18600	5	RO	HFM	ER	Government	SEA	MUNI	1988	POLYMETRICS US	DUPONT US
	1400	2	VC	HTE	TVC	ENEMALTA	SEA	POWER	1990	SASAKURA JP	*Unknown
	240	1	RO	SWM	*Unknown		BRACK	TOUR	1991	BKG WASSER DE	DOW FILMTEC US
Pembroke	17600	4	RO	HFM	ER	Government	SEA	MUNI	1990	POLYMETRICS US	DUPONT US
	120	1	RO	SWM	*Unknown		BRACK	INDU	1992	BKG WASSER DE	DOW FILMTEC US
Malta	1500	2	VC	HTE	TVC	ENEMALTA	SEA	POWER	1991	SIDEM FR	*Unknown
Pembroke	8800	2	RO	HFM	ER	Government	SEA	MUNI	1993	POLYMETRICS US	DUPONT US
Pembroke	27600	6	RO	HFM	ER	Government	SEA	MUNI	1993	POLYMETRICS US	DUPONT US
Qormi	210	1	RO	SWM	*Unknown	GENERAL S DRINK	BRACK	INDU	1994	USFILTER US	DOW FILMTEC US
	300	2	RO	MTU	*Unknown	EXCELSIOR HOTEL	SEA	TOUR	1996	WEIR TECHNA GB	*Unknown
Belgrad	108	1	RO	MTU	*Unknown		BRACK	MUNI	1996	SETEC NL	*Unknown
Delimara	1300	1	VC	HTE	TVC	ENEMALTA	SEA	POWER	1997	SASAKURA JP	*Unknown
Total	127893	57									

Source: 2002 IDA Worldwide Desalting Plants Inventory No. 17, Wangnick Consulting GMBH and IDA