SFG2842 V3

MINISTRY OF NATURAL RESOURCES AND ENVIRONMENT

PROJECT MANAGEMENT UNIT

HCFC Phase-out Project (Stage II)

GENERIC ENVIRONMENTAL MANAGEMENT PLAN

(For Foam Production Sector)

November, 2016

Table of content

1 Project Description

The project development objective is to reduce HCFC consumption in order to assist Vietnam meet its HCFC phase-out obligations under the Montreal Protocol, and to reduce greenhouse gas emissions arising from the replacement of these HCFCs while promoting energy savings if any from the newer refrigeration and air-conditioning equipment.

1. Vietnam became one of the Bank's first two partner countries to receive approval of Stage II HPMP funds at US$14.64 million by the MLF in May 2016. Vietnam is to reduce HCFC consumption by 35% of its baseline by 2020 in the three remaining manufacturing sectors, residential AC, refrigeration and foam, as well as in the servicing sector. It agreed to a total elimination of HCFCs in the AC sector and in imported pre-blended polyols by January 1, 2022. The total phase-out of HCFC-22 and HCFC-141b in imported pre-blended polyol agreed to be achieved under the Stage II project would be 1,005.6 MT (55.31 ODP tons) and 684 MT (75.26 ODP tons)[1] respectively. Japan will join the Bank as a "cooperating agency" to specifically provide technical assistance to the AC sector through its refrigeration and AC industry association (JRAIA). The Stage II project is a continuation of the ongoing Stage I project and the project duration is expected to be from 2017 to 2022. The project consists of three proposed components described below.

Component 1: HCFC Consumption Reduction

AC manufacturing and servicing sector. The project will finance incremental capital costs (ICC) needed for converting to non-HCFC based AC production including procurement of new production equipment, performance testing of new AC models, and technician training for installation and servicing, and incremental operating cost (IOC) based on MLF financing guidelines at four enterprises (consuming a total 175 MT of HCFC-22 in 2014). After conversion at the four enterprises, no HCFC-22 will be used for AC production in the entire sector, i.e. 251 MT of HCFC-22 will be completely phased out. The approved funding is US$2.18 million. The lower GWP alternatives to HCFC-22 in the AC sector are HFC-32 with a GWP 675 or R-290 with a GWP of 5, however both are flammable which will require special safety precautions and investments.

Due to its classification as an A2L refrigerant, mildly flammable refrigerant, HFC-32 requires that certain measures be put into place before its wider use in Vietnam, including in manufacturing. TA will be needed specifically for effective adoption of this technology. Given its recent experience in this area including related to HFC-32 regulation, Japan has been approved under the MLF to provide TA as the Cooperating Agency while drawing practical expertise from Japanese AC manufacturers through JRAIA. TA activities are proposed at a total cost of $233,630: development of A2L policy measures, TA to the AC manufacturers, and TA for good practice in installation and operation. An additional 66.3 MT in HCFC-22 phase-out is expected from the AC servicing and Japan TA activities.

Refrigeration manufacturing sector. The project will finance conversion of priority industrial refrigeration systems where cost-effective and low GWP alternatives (e.g. ammonia, hydrocarbons, HFC-32, etc.) are available through ICC (for system, component and process redesign, new equipment, performance verification, and safety training) and IOC at about 34 enterprises which are

[1] Remaining HCFC-141b consumption that is eligible for MLF.

eligible for MLF funding.[2] Approved funding is US$3.64 million. A reduction of 303 MT will be achieved by project closing. The implementation of HCFC phase-out in the refrigeration sector will be phased, whereby 6-10 demonstration subprojects for applications including ice making units, stand-alone refrigeration units, cold storage rooms, and condensing units will be started at the beginning of the Stage II project. As soon as a body of experience has been accumulated, the knowledge will be used by experts to inform remaining companies.

Refrigeration servicing sector. The project will finance the following activities in the refrigeration servicing sector: training and certification in good servicing and maintenance practices, provision of servicing tools to selected vocational training centers to enable training in the handling of alternative flammable refrigerants and to selected servicing shops to inform the sector on alternatives and prepare for Stage III, TA demonstration for 10 selected industrial refrigeration end users on HCFC leakage management. The approved funding is US$1.37 million for an HCFC-22 phase-out impact of 285.3 MT.

Foam sector. The project will finance ICC needed for foam production conversion to hydrocarbon, methyl formate or HFO (hydrofluoroolefin) alternatives at about 44 enterprises. After completion of conversion at these enterprises, it will be prohibited to use HCFC-141b contained in pre-blended polyol for foam production in the whole sector. About 2035 MT of HCFC-141b will be completely phased out. In order to allow SMEs (consuming less than 20MT of HCFC-141b) to convert to non-HCFC production in a cost-effective way, the project will also finance upgrading of two to four system houses to be competitively selected among existing foam producers or chemical suppliers that have established the basic system house infrastructure. These system houses would supply non-HCFC pre-blended polyol to SMEs. In addition, the project will finance conversion at an enterprise which used HCFC-22 of 100 MT in 2014 for XPS foam production. The approved funding for HCFC-141b phase-out and HCFC-22 phase-out in the foam sector is US$5.52 million and US$613,568 respectively.

Implementation in the foam sector will also be phased due to the limited funding approved in contrast to the large amount of HCFCs used. The largest consumer of pre-blended HCFC-141b polyol systems in Vietnam is the insulated roofing panel manufacturing industry. This subsector is made up of primarily SMEs in real terms. Therefore, four demonstration projects including establishment of system houses for the roofing subsector will be initiated first at the beginning of the Stage II project.

Component 2: Technical Assistance and Policy Actions

This component aims to support sector-wide technology and knowledge transfer, TA and exchange of best practices, as well as to create a policy and market environment that will enable and sustain sector transformation. TA activities focusing on the AC, refrigeration and foam manufacturing sectors will include training workshops on subproject preparation, approval and implementation procedures and requirements, international and national technical consultant services for subproject appraisal and technical support for the PMU and enterprises, development of technical standards of alternatives, training for government officials, training on the safe use of alternatives, study tours on HCFC alternatives, a joint study on integrating HCFC phase-out and EE improvement in the industrial refrigeration manufacturing and food process sectors, and others as needed.[3]

[2] Companies established before September 2007, the ExCom's cut-off date for determining total eligible funding. A total of 71 refrigeration manufacturing enterprises were identified during the 2015 survey.

[3] TA for the AC and refrigeration servicing sector is included in Component 1 as it results in HCFC phase-out impact.

On policies, this component will cover the annual HCFC import quota issuance and the development and issuance of sector-specific policy and regulations by project completion, including a ban on local production and import of HCFC-22 based ACs, and a ban on import and use of pre-blended HCFC-141b polyol in foam production.

Component 3: Project Management

The PMU currently implementing the Stage I HCFC Phase-out Project will most likely continue with financial, procurement, and safeguard management as well as monitoring and reporting responsibility. This component will finance the PMU staff including one project coordinator, two project officers, one procurement officer, one accountant and one administrative officer, project launch and completion workshops, financial audits, annual HCFC consumption verification, public awareness activities, and incremental operating cost (of the PMU).

Project location and salient physical characteristics relevant to the safeguard analysis.

The project covers 71 enterprises of which at least 44 foam enterprises will get direct support through this programme. They are located in various industrial areas throughout Viet Nam.

Six enterprises are located in the industrial area and four in the residential area. The four enterprises in the residential area have intentions to move to industrial areas before or during the project implementation stage expected from January 2012 to December 2014. These enterprises' land has been acquired from the IZ Management Bodies for at least three years already. And another enterprise is to build a new and larger factory on the same site where the local government has decided to turn it from a farming area into an IZ. The remaining enterprise is located in a residential area but relocation to an IZ is not needed because the HCFC alternative technology that will be applied in this case does not have safety issues as would be the case for HC technology.

The background and intended technology for the future activities of the foam enterprises is summarized in the table below.

Table 1: Foam Enterprise Information

No.	Name	Sector	Consumption HCFC-141b (kg/a)	Conversion	Address
1	So Truong Phuong Nam Distribution JSC (block foam)	Mixed	4285	HFO	Floor 2, No 5 Nguyen Gia Thieu, 6 ward, 3 District, Hochiminh City
2	Luoi Cau Hai Dang Co., Ltd (Buoy for fishing rods)	Mixed	5100	Water	329 Quang Trung Street, Vinh Quang ward, Rach Gia City, Kien Giang
3	Ferroli Indochina	EWH & SWH	9020	HFO	Thach That Inddusstrial Zone, Quoc Oai, Ha Noi
4	Tan a Hung Yen Production and Trading Co., Ltd	EWH & SWH	60000	HFO	Factory: Km.6, Highway 39, Yen My town, Yen My district, Hung Yen Province - Pham Thi Ha 0946.999.070 Office: 124 Ton Duc Thang, Dong Da District, Ha Noi;
5	Nam Dai Thanh Production and Trading Co.,Ltd	EWH & SWH	13608	HFO	No. 416-418-420, Ly Thuong Kiet district, Ward 7, Tan Binh district, Ho Chi Minh city
6	Vietronic Tan Binh	Dom. F&R	18000	c-pentane	No. 248A, No Trang Long street, Binh Thanh district, Ho Chi Minh city
7	Darling refrigeration	Dom. F&R	42000	c-pentane	Factory: Di An town, Bình Dương province Office: 37A Luong Huu Khanh, Pham Ngu Lao ward, District 1, Hochiminh City,
8	Viet Nhat (Sanaky) Electronics and Refrigeration Co., Ltd	F&R	149440	c-pentane	No. 6, An Thanh Hamlet ,An Tay Commue, Ben Cat District, Binh Duong Province
9	Jinwwo Vietnam Electronic Co., Ltd	Dom. R&F	1900	HFO	Lot 94, Street No 5, Linh Trung II Industrial Zone and Export Processing Zone, Trang Bang District, Tay Ninh
10	Hoang Tam Co., Ltd	SP	1848	HFO	Lot No II-6A, Street 13, Industrial group II, Tan Binh Industrial zone, Tay Thanh ward, Tan Phu District, Hochiminh City
11	Tan Huy Hoang Co.,Ltd	SP	3520	HFO	Trinh Ngoc Dai, 129/143 Trương Chinh, Kien An, Hai Phong
12	Thanh Thai	SP	3520	HFO	Nhan Vinh Hamlet, Di Su Commue, My Hao District, Hung Yen
13	Quang Thang Refrigeration Co., Ltd (est 1997)	SP	10000	HFO	Km 5, Highway No.5, My Tranh hamlet, Nam Son commune, An Duong district, Hai Phong city
14	Sai Gon Refrigeration Co. Ltd (saree)	SP	17496	HFO	Office: 35/7 Be Van Can tress, Tan Kieng ward, District 7, Ho Chi Minh city; Tel: 083 872 7007 Factory: Mr. Huynh Nhat Vu Lot 25, Tan Tao street, Tan Tao Industrial Zone, Binh Tan district, Ho Chi Minh city

No.	Name	Sector	Consumption HCFC-141b (kg/a)	Conversion	Address
15	Ngo Long (2 lines)	IRP	20400	c-pentane	Lot 79, Street No 10, Song Than 1 Industrial, Di An ward , Di An Town, Binh Duong province
16	Yantaimoon VN Co.,Ltd	SP	56992	c-pentane	Lot 55 Linh Trung 3 Industrial and export processing Zone, An Thinh Commue, Trang Bang District, Tay Ninh province
17	Ngoc Dan Co., Ltd (2 lines)	IRP	256960	c-pentane	Office: 45D Giang Vo Str. Hanoi, Vietnam. Factory: Km 14, 1A Road, Ngoc Hoi Industrial Zone, Thanh Tri district, Ha Noi
18	Tien Duc Technology and Equipment Supply Co., Ltd	SP	156	HFO	E49 Nguyen Oanh, ward 17, Go Vap District , Hochiminh City
19	Viet Hai	SP	6080	HFO	P314 CT5-DDN, My Dinh II New Town, My Dinh II ward, Nam Tu Liem District, Ha Noi
20	Viet Nhat Production and Trading Co., Ltd	SP?	17784	HFO	A6/165 EG, Steet 10, Hamlet 1, Tan Nhut Commue, Binh Chanh District, Hochiminh
21	TECO Long An Chemical and Equipment Trading and Manufacturing Co., Ltd (REACTOR E-10, E-20, A25, EPX2)	SP & Spray	7040	HFO	Lot I-1, 4 street, Hai Son industrial area, Ap Binh Chien 2, Duc Hoa commune, Duc Hoa district, Long An
22	Bi Ta Co Co., LTD	SP	8000	TBD	64/27 KP Binh Phuoc B, Binh Chuan, Thuan An,Binh Duong
23	Vat Lieu Xanh Viet Nam Co., Ltd	IRP &	400	c-pentane	Floor No 6, No 42, To Hien Thanh, Bui Thi Xuan ward, Hai Ba Trung District, Ha Noi;
24	Thanh Tuyet Production and Trading Co., Ltd	SP	300	TBD	Km4 Quoc lo 3, Loc Ha, Mai Lam, Đong Anh, Ha Noi
25	METECNO (Vietnam) Co., Ltd	SP	12642	TBD	Factory: No. 13, 16A Street, Bien Hoa II Industrial Zone, Dong Nai. Address: Office: Floor No.3 - F34 No 40 Ba Huyen Thanh Quan, ward 6, District 10, Hochiminh
26	Bach Khoa Refrigeration Co.,Ltd (Beverage tanks)	Spray & Injection	11040	HFO	Office: No 24 Dai Co Viet, Le Dai Hanh ward, Hai Ba Trung District, Ha Noi
27	T.E.C.O Chemical Trading and Service Co., Ltd	Spray & distributor	81600	HFO and TBD	Office: 19/1 Phan Van Hon, Tan Thoi Nhat ward, 12 District, Hochiminh City
28	Viet Nhat HD Company	IRP	2765	c-pentane	Group 11, Binh Han ward, Hai Duong city, Hai Duong province
29	Austnam JSC	IRP	3080	c-pentane	109 alley, Truong Chinh Str. Hanoi.
30	Tham Thuy Co., Ltd	IRP	3520	c-pentane	Group 17, Doan Ket street, Tien Cat ward, Viet Tri city, Phu Tho province
31	Hien Vuong Trading Co., Ltd	IRP	4004	c-pentane	No. 192, Dien Bien street, Cua Bac ward, Nam Dinh city, Nam Dinh province
32	Hung Ha Tuyen Quang Enterprise Company	IRP	4800	c-pentane	Group 3, Y La ward, Tuyen Quang city
33	Thinh Ngo Production and Trading Company	IRP	5516	c-pentane	Vinh Tuy ward, Hai Ba Trung district, Ha Noi

No.	Name	Sector	Consumption HCFC-141b (kg/a)	Conversion	Address
34	Phuong Nam Co., Ltd	IRP	9351	c-pentane	Tam Quan commune, Tam Dao district, Vinh Phuc province
35	Dai Hoang Nam	IRP	10560	c-pentane	Vo Cuong Industrial Zone, Vo Cuong ward, Bac Ninh Town, Bac Ninh Province
36	Thang Thanh Co., Ltd	IRP	15447	c-pentane	No. 365 Hai Ba Trung, Cat Dai ward, Le Chan district, Hai Phong city
37	Long Phu Production and Trading Co., Ltd	IRP	37600	c-pentane	No. 365 Hai Ba Trung, Cat Dai ward, Le Chan district, Hai Phong city
38	Phuc Thanh Investment and Service Co., Ltd	IRP	40000	c-pentane	Office: No 46 Lot 7 Tran Nhan Tong Street, Tran Quang Khai ward, Nam Dinh City; Factory: Road No.3, An Xa Industrial Zone,
39	HMC Production and Trading Co., Ltd	IRP	45760	c-pentane	229 Tay Son, Nga Tu So ward, Dong Da District, Ha Noi
40	Long Giang	IRP	49280	c-pentane	48 Block 2a, Dong Anh Town, Dong Anh District, Ha Noi
41	Dau Tu Thay Ho	IRP	52800	c-pentane	Lot 38H Quang Minh Industrial, Me Linh, Ha Noi
42	Hung Nam Production and Trading Co., Ltd	IRP	63280	c-pentane	Km22+600, QL 5A Ban Yen Nhan Town, My Hao District, Hung Yen
43	Doan Minh Trading and Production JSC	IRP	178138	3 x c-pentane	Street 70, Mieu Nha Hamlet, Tay Mo Commue, Tu Liem District, Ha Noi
44	Anh Phuc Co., Ltd	IRP	4752	c-pentane	Long Boi hamlet, Dong Hop commune, Dong Hung district, Thai Binh province
45	Hoa Minh Investment and Trading Co. Ltd	IRP	5000	c-pentane	So 828 đuong 30/4, Vung Tau, Ba Ria- Vung Tau
46	Thai Thinh Trading and Service JSC	IRP	8554	c-pentane	Kieu Ky hamlet, Kieu Ky commune, Gia Lam district, Ha Noi
47	Xuan Hoan Trading and Production Co., Ltd	IRP	8712	c-pentane	To hamlet, Tay Mo ward, Nam Tu Liem district, Ha Noi
48	Ngoi Sao Viet Trading and Technology Co., Ltd	IRP	17336	c-pentane	Hamlet 10, Nhu Quynh town, Van Lam district, Hung Yen province
49	Gia Long	IRP	42240	c-pentane	Tran The Khoi, TS21 Street, Tien Sơn, Tu Sơn, Bac Ninh
50	Van Dat Thanh Co., Ltd	IRP	80000	c-pentane	No 665, Vu Van Hieu street, Ha Tu, Ha Long, Quang Ninh province
51	Ha Tan Co., Ltd	IRP	1000	c-pentane	No 665, Vu Van Hieu street, Ha Tu, Ha Long, Quang Ninh province
52	My Viet Trading Co., Ltd (Also roofing)	EWH & IRP	12000 (EWH) 119960	HFO & c-pentane	Factory: Pho Noi A Industrial Zone - Van Lam district, Hung Yen province Head Office: 36 Cat Linh, Dong Da district, Ha Noi
53	Tran Huu Duc Co., Ltd	IRP	17226	c-pentane	1156 National road 1A, Ward Tan Tao A, Binh Tan Dist. HCM city

No.	Name	Sector	Consumption HCFC-141b (kg/a)	Conversion	Address
54	SAPAI Production-Trading-Service Co., Ltd Clean Room panel manufacturer	Clean Room SP	10000	HFO or TBD	Lot B1-1, Area A3, Street D9, Rach Bap industrial park, Ben Cat district, Binh Duong province
55	Son Ha Energy Development JSC	SWH	8526	HFO	Lot CNI, Tu Liem Industrial Zone, Minh Khai ward, Bac Tu Liem district, Ha Noi
56	Dong Tam Plastic Company (Graco E10&E20)	TW	780	HFO	No. 28/5A - Luong Van Can, Ward 15, District 8, Ho Chi Minh city
57	Thinh Hoa Plastic Company	TW	1027	HFO	Group 14, Thuan Tien B Hamlet, Thuan An commune, Binh Minh town, Vinh Long province
58	Phuoc Thanh Plastic Co., Ltd	TW	1760	HFO	1250-1252 Vo Van Kiet, ward 10, District 5, Hochiminh City
59	Tan Hung Thai	TW	15795	HFO	Lot H1, Street No 1, Le Minh Xuan Inddustrial Zone, Binh Chanh Provice, TPHCM,
60	Mien Tay Plastic JSC	TW	1760	HFO	288A, CMT8 Street, Bui Huu Nghia ward, Binh Thuy District, Can Tho City
61	Ty Lien Plastic	TW	54508	HFO	130B Long Hoa Hamlet, Phuoc Long Town, Phuoc Long District, Bac Lieu Provine,
62	Phan Bach Refrigeration Co., Ltd	Mixed (spray)	40000	HFO	16 Nguyen Thien Thuat, 2 ward, 3 District, Hochiminh City
63	Hoang Dat Refrigeration JSC	Mixed (spray)	32000	HFO	75B Ton Duc Thang, Quoc Tu Giam ward Dong Da District, Ha Noi
64	Hoang Gia Anh Co., Ltd	Not identified	20000	TBD	No. 94-96-98, Ha Huy Tap street, Ha Tinh city
65	Dich Vu Ky Thuat Hang Khong JSC	Not identified	126	TBD	Lot 43A, Quang Minh Industrial, Me Linh, Ha Noi
66	Nasage Viet Nam Co., Ltd	Not identified	10000	TBD	Room 1203, Cornerstone building, No.16 Phan Chu Trinh street, Hoan Kiem district, Ha Noi
67	Thanh Hung	Not identified	168960	TBD	No 105, Hoa Binh 4 Alley, Minh Khai ward, Hai Ba Trung Districh, Ha Noi,
68	Hoang Gia	Notifiedt iden	40000	TBD	No 42, Alley 157, Phao Dai Lang, Dong Da, Ha Noi
69	Ngoc Trung Refrigeration JSC	Not identified	10000	TBD	No. 133, Street 5, KP 3, Tan Quy ward, District 7, Ho Chi Minh city
70	Ha Linh Production and Trading Co., Ltd	Not identified	60000	TBD	Lot B2, No. 26-27, Road No. 3, Tan Dong Hiep B Industrial Zone, Tan Dong Hiep Ward, Di An Town, Binh Duong Province

No.	Name	Sector	Consumption HCFC-141b (kg/a)	Conversion	Address
71	Sibari JSC	Ref.	105600	TBD	39 Street No 17, street group No 4, Tan Thuan Tay ward, 7 District, Hochiminh City, Tel: 083 8721821; 0903913864; sibari.vn@gmail.com

2 Applicable Environmental Legislative Framework

2.1 Relevant International legal documents:

The Vienna Convention for the protection of the Ozone Layer and it's the Montreal Protocol on substances that deplete the Ozone Layer as well as the London (1990), Copenhagen (1992), Beijing (1997) and the Montreal (1999) Amendments to the Protocol.

The Agreement between Government of Vietnam and the Executive Committee of the Multilateral Fund for the implementation of the Montreal Protocol for the Reduction in Consumption of HCFCs.

The Trust Fund Grant Agreement between Vietnam Government and The International Bank for Reconstruction and Development (The World Bank) for the implementation of Vietnam National HCFC Phase-out Management Plan Stage I that was approved by the Executive Committee of the Multilateral Fund at its 63rd Meeting.

2.2 National laws and regulations

National law and regulations listed below should be applied for the environmental management of the conversion to cyclo-pentane in the foam manufacturing enterprises.

Table 2: Relevant National Laws and Regulations

National Laws and Regulations	Effective Date	Remarks to enterprises
Regulations on Environment and Safety		
Law on Environment Protection No 55/2014/QH13 dated 23 June 2014	01/01/2015	Change on EIA/EMP Requirement
Decree No. 18/2015/ND-CP dated 14 February 2015 by Government, providing details regulations on environmental protection plan, strategic environmental assessment, environmental impacts assessment and environmental protection plan	01/04/2015	Enterprises required to Prepare the EIA/EMP should follow new Decree.
Decree No. 19/2015/ND-CP dated 14 February 2015 by Government on implementation guidance for environmental law	01/04/2015	
Circular No. 27/2015/TT-BTNMT dated 29 May, 2015 by MONRE on guidance of implementation of Decree No.18.	06/2015	Enterprises required to prepare the EIA/EMP should follow new Circular
Circular 36/2015/TT-BTNMT dated 30 June 2015 on hazardous waste management		Public the hazardous waste owner registration book
Decree No.38/2015/ND-CP on Management of Waste and Discarded Materials		Management of hazardous waste
National Technical Standard QCVN 07: 2009 on thresholds of hazardous waste		
Circular No 48/2011/TT- BTNMT dated 28 February 2011 on the Environment Management and Protection at industrial Zones		Refer on changes of waste management and EIA approval for enterprises located in industrial zones

National Laws and Regulations	Effective Date	Remarks to enterprises
Decree No. 179/2013/ND-CP on the Sanction of Administrative Violations in the Domain of Environmental Protection		Maximum fine of 01 billion VND for individuals and 02 billion VND for organization
Law on occupational safety and hygiene No.84/2015/QH13 dated 25 June 2015		Regulate safety and hygiene conditions applied for all enterprises and individual worker
Regulations on chemicals		
Chemical law No. 06/2007/QH12 dated 21 November, 2007	01/07/2008	
Decree No. 108/2008/ND-CP dated 07 October, 2008 by Government on implementation of chemical law	05/11/2008	
Decree No 26/2011/ NĐ-CP dated 8 April 2011 on the modification of the Decree 108/2008/ND-CP on the implementation of the Law on Chemicals	01/06/2011 Appendix IV and Appendix VII	Cyclo-pentane Cas No. 287-92-3 is the chemical No.640 in the list of chemicals which require the measures on precautions, chemical emergency response (Appendix VII)
Circular No.04/2012/BCT dated 13 February 2012 on classification and labels of chemicals	30/03/2012	
Circular No. 20/2013/TT-BCT dated 5 August, 2013 on the implement of Decree No.26/2011 and regulation of plans and measures on precautions, chemical emergency response for industrial sectors	15/10/2013	According to Article 12, chapter 3, the enterprises need to prepare the measures and submit to Department of Industry and Trading for approval
TCVN 5507:2002 – Hazardous chemical – Safety regulation in production, trade, utilization, storage and transport		
Regulations on fire prevention and protection		
Law on fire prevention and protection No. 27/2001/QH10 dated 29 June 2001	04/10/2001	All articles, fire prevention and protection
Decree No. 35/2003/ND-CP dated 04 March 2003 by Government on implementation of the Law 27/2001/QH10 on fire prevention and protection		
Law No.40/2013/QH13 dated 22 November, 2014 on amended law of fire prevention and protection	01/07/2014	
Decree No.79/2014/ND-CP by Government on implementation of amended laws	31/07/2014	
Circular No 11/2014/TT- BCA of the Ministry of Police on Fire prevention and protection dated 12 March, 2014 on detailed regulations in Decree No. 35/2003/ND-CP dated 04 March 2003, Decree No. 46/2012/ND-CP dated 22 May 2012	12/03/2014	Enterprises should prepare the Fire prevention and protection document following the PC-10

National Laws and Regulations	Effective Date	Remarks to enterprises
		template mentioned in this circular
Circular No. 66/2014/TT- BCA of the Ministry of Police on Implementation of Decree No. 79/2014		
TCVN 3890:2009 on fire prevention and fight equipment for house and structures – Equipment, installation, inspection and maintenance		
Law on Standards and Technical Regulations of Vietnam No. 68/2006/QH11 dated on June 29, 2006, ratified by 11th National Assembly of Vietnam Socialist Republic	Applicable standards/national technical regulations	

2.3 Applicable National Technical Guidelines/Standards

QCVN 07:2009/BTNMT: National technical regulation on hazardous waste thresholds.

National Technical Standard TCVN 5507: 2002 regarding Hazardous chemicals – Code of practice for safety in production, commerce, use, handling and transportation.

Discharge, emission, and Waste management shall meet minimum requirement as stated on the QCVN 06:2009/BTNMT; QCVN 07:2009/BTNMT, QCVN 14:2006/BTNMT; QCVN 40:2011/BTNMT, QCVN 08-MT:2015/BTNMT requires that the licensed factories shall always comply with the established standard for discharging waste and emitting pollution.

In general, refrigeration production processes do not generate waste water and emission of air contaminants directly except the factory that has pre-treatment process of the metal parts for powder coating. In the refrigeration factory that has waste water from metal cleaning pits, must ensure the quality of discharged effluent always within the limits.

There are regulations on management of waste and discarded material (Decree No.38/2015/ND-CP) and hazardous waste management (Circular 36/2015/TT-BTNMT) on guidance for transportation, storage, handling and disposal of chemical and hazardous substance packages (TCVN07:2002).

2.4 WB Policies and Guidelines

Of the 10 safeguards policies of the Bank, only Environmental Assessment OP 4.01 is triggered. In addition, the implementation of the EMP must follow the World Bank Group EHS (Environment, Health and Safety) Guidelines to address safety requirements associated with the hydrocarbon technology. The relevant content of World Bank OP 4.01 and EHS is described below:

Table 3: Word Bank Safeguard Policies [4]

[4] *For more details about WB guidelines and Policies, please visit Bank websites:* *http://web.worldbank.org/WBSITE/EXTERNAL/PROJECTS/EXTPOLICIES/EXTSAFEPOL/0,,menuPK:584441~pagePK:64168427~piPK:64168435~theSitePK:584435,00.html* and *http://www.ifc.org/ifcext/sustainability.nsf/Content/EHSGuidelines*

Word Bank Safeguards	Abstracts/Descriptions
Environmental Assessment (OP 4.01)	EA is a process whose breadth, depth, and type of analysis depend on the nature, scale, and potential environmental impact of the proposed project. EA evaluates a project's potential environmental risks and impacts in its area of influence; examines project alternatives; identifies ways of improving project selection, siting, planning, design, and implementation by preventing, minimizing, mitigating, or compensating for adverse environmental impacts and enhancing positive impacts; and includes the process of mitigating and managing adverse environmental impacts throughout project implementation. The Bank favors preventive measures over mitigatory or compensatory measures, whenever feasible. The project will have a positive impact on the global environment by reducing the use of HCFCs, which are ozone-depleting substances and greenhouse gases with a global warming potential (GWP) ranging from several hundred to several thousand times that of CO_2. While HCFCs have an impact on the global environment, they have no adverse local impact as these chemicals are stable and not considered toxic or otherwise dangerous for the environment. The project will include a series of investment activities with 71 foam producers. No closure of these 71 foam enterprises is expected, but some enterprises may build a new factory. Hydrocarbon, HFO optimized (reduced) and water blowing has been selected as a blowing agent to replace HCFC-141b that is being used in the foam sector. Hydrocarbon has a Global Warming Potential of less than 25. Hydrocarbon (cyclopentane) is classified as a Volatile Organic Compound (VOC), but its use results in very low levels of emissions of about 2-3% of the blowing agent, which is minuscule compared, for example, to emissions from two-stroke motorcycle traffic in countries such as Vietnam. Therefore, there is no significant environmental impact from the chemical Hydrocarbon itself. HFO-1233zd(E) or (trans-1-Chloro-3,3,3-trifluoropropylene), Molecular Formula: C3H2ClF3; CAS Number: 102687-65-0, EC-No. 700-486-0, has a Global Warming Potential 1, and it has on exempt of VOC. Thus, it results very low levels of emissions. The other chemicals involved in foam production are MDI, amine catalysts and fire retardants. The 71 foam enterprises purchase pre-formulated polyol (blended with HCFC-141b) and polymeric MDI (isocyanates) for their rigid foam production. The probability that a spill of polymeric MDI- a liquid at room temperature- contaminates the soil and water is very low, because the floor of the foam production areas consists of cement coated with an anti-leakage, low permeability\chemical layer such as epoxy. In the case that MDI leaks into the soil, it will react with the moisture/water, and the reaction would result in CO_2 and insoluble polyurea compounds, which are not biodegradable but chemically inert. Fire retardant and amine catalysts (very limited amount) are mixed/pre-formulated in the polyol at the system houses (pre-blended polyol suppliers), from which the foam enterprises purchase pre-blended polyol and MDI, so the foam enterprises will not handle these toxic chemicals directly. Fire retardant and amine catalysts will remain in the final foam products and are not likely to be emitted to the environment during the foam production or later. Therefore, there are no anticipated legacy environmental contamination issues that are associated with the production at the 71 foam enterprises. However, safety requirements associated with hydrocarbons (cylco-pentanes under the project) due to the flammability may still present operational challenges for smaller foam enterprises. Therefore, the Environmental Assessment (OP/BP 4.01) policy is triggered.

	Based on the above, it is not considered necessary to prepare an Environmental Impact Assessment, but an Environmental Management Plan for enterprises' use during the project implementation stage was determined to address the safety concerns of hydrocarbon. In addition, an environmental due diligence review was also carried out for the existing sites of the enterprises that will relocate to IZs, no potential environmental contamination resulting from existing PU rigid foam production in these enterprises were identified. In addition to this overall EMP, the enterprises have also been requested to prepare their site-specific EMPs as an integrated part of their subproject proposals in order to participate in the Project and receive access to any funding. The enterprises' managers and operational staff will be trained annually on environment and health/safety requirements during the foam conversion under the Project. Safety audits before the start-up of normal foam production using hydrocarbons will be carried out by technical consultants hired by the PMU. World Bank supervision missions will also follow up on implementation of the EMP.
The World Bank Group Environmental , Health & Safety(EHS) General Guidelines	The Environmental Health and Safety Guidelines (EHS) are technical reference. The EHS Guidelines are technical reference documents with general and industry-specific examples of Good International Industry Practice (GIIP), as defined in IFC's Performance Standard 3 on Pollution Prevention and Abatement. The EHS Guidelines contain the performance levels and measures that are normally acceptable to the World Bank Group and are generally considered to be achievable in new facilities at reasonable costs by existing technology. When host country regulations differ from the levels and measures presented in the EHS Guidelines, projects are expected to achieve whichever is more stringent. If less stringent levels or measures are appropriate in view of specific project circumstances, a full and detailed justification for any proposed alternatives is needed as part of the site-specific environmental assessment. This justification should demonstrate that the choice for any alternate performance levels is protective of human health and the environment. In this EMP, relevant guidelines from the World Bank Group EHS guidelines are incorporated into mitigation measures.

2.5 Stakeholder Consultation and Public Disclosure

The Project Stakeholder Consultation of Generic Environmental Management Plan (EMP) for the foam sector under HCFC Phase out Project stage II was organized at 2 rounds such as: (i) be consulted by surveyed enterprises during the Bank due diligent; and (ii) the stakeholder consultation meeting hold at meeting room of the World Bank on 17 November, 2016.

The first consultancy, aimed at exploring the potential risks and challenges for converting the refrigerants, was addressed during the due diligent mission of the World Bank team from 6 to 10 November, 2015; 26 January, 2016, and from 12 August to 16 September, 2016. There were 9 participants from relative agencies (different sectors) attending this consultation, including Phuong Nam, SAREE, REE, Midea, Metero, Darling, Ngo Long, 6M, VietTrust meeting.

The main objective of the second stakeholder consultation meeting was to present the content and goal of the EMP for each sector comprising of general risk assessment for each sector, local regulations applicable for enterprises, local regulations specific for cyclopentane and HFO and proposed

mitigation measures for the conversion from HCFC-22 to cyclopentane and HFO. More details of the consultation and stakeholders recommendations are provided in Annex 6.

All the comments from stakeholders was included in the final generic EMPs, which was disclosed on the website and office of the Bank, PMU and enterprises from 18 November, 2016.

Due diligence: A due diligence review of Environmental and Social Safeguard on occupational health and safety measures, fire and exposure risk will be conducted during the commission of subprojects and the early operation phase by the PMU. The Bank team will also selectively visit some subprojects to carry out safety and environmental review as well to ensure the full EMP implementation. When the site EMP is prepared, it will be disclosed at their offices and factories.

3 Overview of Adverse Impacts and Mitigate Measures

3.1 Potential impacts in construction phase

In phase 2, project will target to 44 foam enterprises and one Extruded polystyrene (XPS) foams use CO2 với Alcohol/DME/ u-HFC. Of which 4 enterprises located in the residential areas and intended to relocate in the industrial zones and 1 enterprise (Dien An) planed to re-built their factory at the extend area nearby existing factory.

The construction of foam factories mostly occur in the industrial zone, therefore the impacts are not significantly and can be managed. The enterprises will applied the Environmental Codes of Practice (ECOP) in Annex 1 to minimize and mitigate the adverse impacts.

3.2 Potential impacts in operation phase due to gas conversion

The conversion to cyclo-pentane (hydrocarbon) at circa 33 rigid foam producers, to HFO-blown in circa 27 rigid foam producers and to HFO or water blow in remaining 11 PU foam manufacturer will have a positive impact on the global environment by phasing out the use of HCFC- 141b - ozone-depleting substances. HCFC-141b is also greenhouse gases with a global warming potential (GWP) of 725 times that of CO_2 equivalent. While HCFCs have an impact on the global environment, they have no adverse local impacts as these chemicals are stable and not considered toxic or otherwise dangerous for the environment.

Hydrofluoro-olefine, HFO-1233zd(E) or (trans-1-Chloro-3,3,3-trifluoropropylene), Molecular Formula: C3H2ClF3; CAS Number: 102687-65-0, EC-No. 700-486-0, has a Global Warming Potential 1, and it has on exempt of VOC. Thus, it is not classified as Volatile Organic Compound (VOC) and it results very low levels of emissions.

Hydrocarbon has zero ODP and GWP of less than 25. Hydrocarbon (cyclo-pentane) is classified as a VOC, but its use results in very low levels of emissions of about 2-3% of the blowing agent. However, hydrocarbon is flammable and explosive and safety requirements associated with hydrocarbons due to its flammability and explosion may still present operational challenges for the foam companies. For all operating sites, occupational health and safety (OHS) measures (such as prevention from inhalation of MDI vapors which may cause skin irritation); spill prevention, control, and countermeasures; and fire risks (particularly due to the presence of flammable chemicals) have been identified and

appropriate emergency preparedness and response measures have been proposed. Staff, including technicians must be trained on handling with hydrocarbon. The Table 4 below summarizes the adverse impacts of chemicals used for the foam production, key mitigation measures and residual impacts. More details are attached in Annex 2.

Table 4: Summary of Chemical Impacts, Key Mitigation Measures and Residual Impacts

Chemical	Theoretical impact	Potential impact in foam production	Key mitigation measures	Residual impacts
MDI diphenylmethane-4,4'-diisocyanate CAS No. 26447-40-5	ENVIRONMENT IMPACTS **Acute Fish toxicity:** diphenylmethane-diisocyanate, isomers and homologues LC0 > 1.000 mg/l Species: Danio rerio (zebra fish) Exposure duration: 96 h Method: OECD Test Guideline 203 **Acute toxicity for daphnia:** diphenylmethane-diisocyanate, isomers and homologues EC50 > 1.000 mg/l Species: Daphnia magna (Water flea) Exposure duration: 24 h Method: OECD Test Guideline 202 **Acute bacterial toxicity:** diphenylmethane-diisocyanate, isomers and homologues EC50 > 100 mg/l Tested on: activated sludge Duration of test: 3 h Method: OECD Test Guideline 209 **Persistence and degradability** **Biodegradability:** diphenylmethane-diisocyanate, isomers and homologues	ENVIRONMENT IMPACTS In the aquatic and terrestrial environment, MDI reacts with water, forming insoluble polyureas that are chemically and biologically inert. This reaction limits the movement of MDI in soil and water. OHS • Harmful by inhalation • Irritating to eyes, respiratory system and skin • May cause sensitisation by inhalation and skin contact	-Avoid any spills during the storage and production by means of constructing storage facilities, pipelines and polyurethane foaming machine according to strictest machine construction standards. - Efficient and adequate extract ventilation - Chemical goggles should be used when working with MDI and an eye wash fountain should be located in the immediate work area. - Hazard communication and training programs to prepare workers to recognize and respond to workplace chemical hazards	None

Chemical	Theoretical impact	Potential impact in foam production	Key mitigation measures	Residual impacts
	Biodegradation: 0 %, 28 d, i.e. not degradable Method: OECD Test Guideline 302 C <u>OHS IMPACTS</u> ***Skin contact*** – Skin contact may cause an allergic skin reaction. Animal studies have shown that skin contact with isocyanates may play a role in respiratory sensitization. ***Eye contact*** – MDI may cause moderate eye irritation and slight, temporary corneal injury. ***Inhalation*** – At room temperature, MDI vapors are minimal due to low volatility. However, certain operations may generate vapor or mist concentrations sufficient to cause respiratory irritation and other adverse effects. Such operations include those in which the material is heated, sprayed or otherwise mechanically dispersed such as drumming, venting or pumping. Excessive exposure may cause irritation to upper respiratory tract (nose and throat) and lungs. MDI inhalation exposure may cause pulmonary edema (fluid in the lungs.) Effects may be delayed. Decreased lung function has been associated with overexposure to isocyanates. MDI inhalation may cause an allergic respiratory response.			

Chemical	Theoretical impact	Potential impact in foam production	Key mitigation measures	Residual impacts
	MDI concentrations below the exposure guidelines may cause allergic respiratory reactions in individuals already sensitized. Asthma-like symptoms may include coughing, difficult breathing and a feeling of tightness in the chest. Occasionally, breathing difficulties may be life threatening. ***Ingestion*** – MDI products have low acute oral toxicity. Small amounts swallowed incidentally as a result of normal handling operations are not likely to cause injury; however, swallowing larger amounts may cause injury. Good personal hygiene practices must be observed and hands washed before eating. Food should not be stored or consumed where MDI is used. ***Other*** – Lung tumours have been observed in laboratory animals exposed to respirable aerosol droplets of MDI/Polymeric MDI (6 mg/m3) for their lifetime. Tumors occurred concurrently with respiratory irritation and lung injury. Current exposure guidelines are expected to protect against these effects reported for MDI. MDI has been toxic to the fetus in laboratory animals at doses toxic to the mother. MDI did not cause birth defects in laboratory animals.			
Polyol - Polyol	ENVIRONMENT IMPACTS	ENVIRONMENT IMPACTS	- Avoid any spills during the storage and production by means of	None

Chemical	Theoretical impact	Potential impact in foam production	Key mitigation measures	Residual impacts
component is a mixture of various polyols combined with polyamines, fire-retardant, catalysts and cross-linking agents	***Ecotoxicity*** - Data for Component: Phenol, polymer with formaldehyde, propylene oxide and ethylene oxide: Material is harmful to aquatic organisms (LC50/EC50/IC50 between 10 and 100 mg/L in most sensitive species). <u>OHS IMPACTS</u> ***Skin Contact*** - Prolonged contact may cause slight skin irritation with local redness. ***Eye Contact*** - Many polyols cause only slight temporary irritation if they contact the eyes. Safety glasses are recommended for minimum eye protection when these polyols are handled or used. Amine-initiated and Mannich-based polyols can cause moderate to severe irritation and injury to the eyes. Therefore, chemical goggles are recommended for handling these materials, as stated on the MSDS and product label. ***Inhalation*** - Because of their low vapor pressure, polyols do not pose a significant inhalation hazard when handled at room temperature. Under most conditions of use, good general ventilation will be adequate and no respiratory protections are needed. If materials are heated, or if a fine mist is being generated, local ventilation and respiratory protection may be required.	• No bio-concentration is expected because of the relatively high molecular weight (MW greater than 1000). • Based largely or completely on information for similar material(s). No bio-concentration is expected because of the relatively high water solubility. <u>OHS IMPACTS</u> The principal hazard associated with polyol is a safety hazard—spilled material can be very slippery	constructing storage facilities, pipelines and polyurethane foaming machine according to strictest machine construction standards. - Use magnetic couplings always when possible to avoid polyol spill / leakages from the pumps - Adequate ventilation - Hazard communication and training programs to prepare workers to recognize and respond to workplace chemical hazards	

Chemical	Theoretical impact	Potential impact in foam production	Key mitigation measures	Residual impacts
	Ingestion - Polyols are low to very low in acute oral toxicity. Most LD50 values range from 2.0 grams to greater than 10 grams per kilogram of body weight for laboratory animals. A few have oral LD50 values between 1,000 and 2,000 mg/kg. Swallowing small amounts of these polyols is not likely to cause injury. Although swallowing large amounts of polyols may cause toxic effects, the possibility of such ingestion is unlikely with proper industrial handling and use.			
Cyclo-pentane Cas No. 287-92-3 Usage from 70 kg to 280 kg/day Normal release to the environment during production operation in 33 factories is from 7kg/day to 30 kg/day	ENVIRONMENTAL IMPACTS • Harmful to aquatic organisms, may cause long-term adverse effects in the aquatic environment. • Given its physical and chemical characteristics, the product shows very little mobility in the ground. ***Eco-toxity*** – Cyclo-pentane is water insoluble and cannot move readily in soil and water; evaporation is rapid, reducing the likelihood of soil or water contamination ***Aquatic Toxicity*** EC50 (Crustacea, 48hr) 19.6mg/litre (artemia salina), 10.5mg/litre (daphnia magna) EC50 (Algae, 3hr) 124mg/litre (chlamydomonas species), 116mg/litre (chlorella vulgaris)	ENVIRONMENTAL IMPACTS ***Bioaccumulation*** - cyclo-pentane is poorly absorbed but may bioaccumulate moderately ***Biodegradation*** – cyclo-pentane degrades slowly in the presence of oxygen ***Abiotic Degradation*** – cyclo-pentane reacts with atmospheric hydroxyl radicals; its estimated halflife in air is 66 hours	- Avoid any spills during the storage and production by means of constructing storage facilities, pipelines and polyurethane foaming machine according to strictest machine construction standards. - Hazard communication and training programs to prepare workers to recognize and respond to workplace chemical hazards - Avoid uncontrolled reactions and conditions resulting in fire or explosion. Recommended prevention practice include the following: + Use magnetic couplings always when possible to avoid spill / leakages from the pumps	None

Chemical	Theoretical impact	Potential impact in foam production	Key mitigation measures	Residual impacts
	Marine pollutant – not marine pollutant <u>OHS IMPACTS</u> Highly flammable Vapor/air mixtures are explosive Dizziness. Headache. Nausea. Unconsciousness. Weakness.	<u>OHS IMPACTS</u> Explosion, if not handled correctly Lower explosive limit: 1.1 vol-% = 32 g/m^3 Upper explosion limit: 8.7 vol-% = 267g/m^3 (Evaporation rate at 20°C – 30°C > 2.4 kg/h per m^2 surface) Vapor has higher density than air (accumulates on the lowest point of the workshop)	+ Always use non-sparking bronze or aluminum hand tools. All electrical and mechanical equipment (including lighting, switchgear and forklift trucks) used with or around this product must be explosion-proof according to the zoning. + Always ground or electrically bond both the source container and the receiving container, and transfer pump before transferring contents. + Avoid splashing by ensuring that the product nozzle is below the surface in the receiving container. + For indoor storage, only store a minimum quantity in a cool (below 30 °C / 86 °F) environment, away from sources of ignition, heat and oxidizing agents. + Bulk storage should be outdoors, but under a roof to prevent exposure to the sun. Tanks must be vented, and the vents equipped with spark arrestors. Drums must be kept away from oxidizers and corrosives. Drums should have pressure/vacuum relief venting. Drums should be bonded or grounded – contact with an	

Chemical	Theoretical impact	Potential impact in foam production	Key mitigation measures	Residual impacts
			appropriately conductive concrete floor may is supposed to be adequate. Drum storage area must be well ventilated – with floor level venting! Storage area should have raised sills to contain spills. + Storage area must be kept clean and free of rags, mops, and similar equipment. + Never use a cloth dampened with this product for wiping or cleaning surfaces! The friction of wiping is likely to generate a static charge which may ignite the cyclo-pentane. + Prohibition of all sources of ignition from areas near storage tanks. Never cut, drill, weld or grind on or near this container. - Good extract ventilation is necessary for the OHS - Avoid breathing product vapor. Use with adequate ventilation. If dealing with a spill, and ventilation is impossible or impractical, wear a suitable respirator with organic vapor cartridge. An air-supplied respirator may be necessary because cyclo-pentane is so volatile that it may	

Chemical	Theoretical impact	Potential impact in foam production	Key mitigation measures	Residual impacts
			displace oxygen, potentially asphyxiating an unprotected worker. - Avoid contact with skin and wash work clothes frequently. An eye bath and safety shower must be available near the workplace. - Prepare Emergency Preparedness and Response Plan to cope with fire risk which include the following: + Training staff/workers on release prevention including drills to specific to fire explosion + Implementation of inspection programs to maintain the mechanical integrity and operability of pressure vessels, tanks, piping systems, relief and vent valve systems, containment infrastructure, emergency shutdown systems, controls and pumps, and associated process equipment +Identification of locations of cyclo-pentane and associated activities on emergency plan site map + Description of response activities in case of fire explosion include: o internal and external notification procedures	

Chemical	Theoretical impact	Potential impact in foam production	Key mitigation measures	Residual impacts
			○ specific responsibility of individual or groups ○ facility evacuation routes	
Methylene Chloride CAS No: 75-09-2	<u>ENVIRONMENTAL IMPACTS</u> Impact is very limited due its fast evaporation rate LC 50, 96 Hrs, FISH mg/l 224 EC 50, 48 Hrs, DAPHNIA, mg/l 480 IC 50, 72 Hrs, ALGAE, mg/l 662 Combustible under specific conditions. Gives off irritating or toxic fumes (or gases) in a fire. <u>OHS IMPACT</u> MC can affect the body if it is inhaled or if the liquid comes in contact with the eyes or skin. It can also affect the body if it is swallowed Short-term Exposure: MC is an anesthetic. Inhaling the vapor may cause mental confusion, light-headedness, nausea, vomiting, and headache. Continued exposure may cause increased light-headedness, staggering, unconsciousness, and even death. High vapor concentrations may also cause irritation of the eyes and respiratory tract. Exposure to MC may make	<u>ENVIRONMENTAL IMPACTS</u> ***Bioaccumulation*** - The product has poor water-solubility. ***Biodegradation*** - The product is not expected to be biodegradable <u>OHS IMPACT</u> MC can affect the body if it is inhaled or if the liquid comes in contact with the eyes or skin. It can also affect the body if it is swallowed	- Avoid any spills. - New foaming machines to be purchased do not require use of Methylene Chloride for cleaning the foam mixing head. Thus the use of methylene chloride should be avoided and minimized so much as possible. - Small spills should be absorbed onto sand and taken to a safe area for atmospheric evaporation.	None

Chemical	Theoretical impact	Potential impact in foam production	Key mitigation measures	Residual impacts
	the symptoms of angina (chest pains) worse. Skin exposure to liquid MC may cause irritation. If liquid MC remains on the skin, it may cause skin burns. Splashes of the liquid into the eyes may cause irritation. Long-term (chronic) exposure: The best evidence that MC causes cancer is from laboratory studies in which rats, mice and hamsters inhaled MC 6 hours per day, 5 days per week for 2 years. MC exposure produced lung and liver tumors in mice and mammary tumors in rats. No carcinogenic effects of MC were found in hamsters. There are also some human epidemiological studies which show an association between occupational exposure to MC and increases in biliary (bile duct) cancer and a type of brain cancer. Other epidemiological studies have not observed a relationship between MC exposure and cancer. OSHA interprets these results to mean that there is suggestive (but not absolute) evidence that MC is a human carcinogen.			
Trans-1-Chloro-3,3,3-Trifluoropropene	<u>ENVIRONMENTAL IMPACTS</u> Fast evaporation, however should not be released to environment. Acute oral toxicity : not applicable Acute dermal toxicity : not applicable Acute inhalation toxicity : LC50	Eye irritation : not applicable Sensitisation : Result: Does not cause skin sensitisation. Classification: Patch test on human volunteers did not demonstrate sensitisation		

Chemical	Theoretical impact	Potential impact in foam production	Key mitigation measures	Residual impacts
CAS Number: 102687-65-0 See also attached MSDS	Species: rat Value: 120000 ppm Exposure time: 4 h Skin irritation : Species: rabbit Result: No skin irritation Exposure time: 4 h Method: OECD Test Guideline 404 Species: dogs Cardiac sensitisation threshold (dog): 25000 ppm. Repeated dose toxicity : Species: rat Application Route: Inhalation Exposure time: 90 d NOAEL : 4000 ppm Method: OECD Test Guideline 413 Note: Subchronic toxicity Species: rabbit Note: No-observed-effect level - 15,000 ppm Species: rat Note: No-observed-effect level - 10,000 ppm	properties. Sensitisation : Cardiac sensitization		
	<u>ECOLOGICAL INFORMATION</u> Toxicity to fish LC50 Species: Oncorhynchus mykiss (rainbow trout) Value: 38 mg/l Exposure time: 96 h Method: OECD Test Guideline 203 Toxicity to aquatic plants EC50 Growth inhibition	Biodegradation: 0 % Exposure time: 28 d Result: Not readily biodegradable		

Chemical	Theoretical impact	Potential impact in foam production	Key mitigation measures	Residual impacts
	Species: Pseudokirchneriella subcapitata (green algae) Value: 106,7 mg/l Exposure time: 72 h Method: OECD Test Guideline 201 Acute toxicity to aquatic invertebrates EC50 Immobilization Species: Daphnia magna (Water flea) Value: 82 mg/l Exposure time: 48 h Method: OECD Test Guideline 202			

4 Safety Operations for C5 Technology

The following measures and operation are required to work with C5 technology in terms of safety, sustainability and efficiency:

1. As C5 is a highly flammable chemical, danger zone must be identified and classified as Zone 0, Zone 1 and Zone 2. The identification of these zones will help in the design of the Safety devices to use the kind of precautions/preventions to take for safe operation.
    - Zone 0: area in which an explosive gas, mist or vapour atmosphere is presence continuously, or long periods; i.e. C5 room;
    - Zone 1: area in which an explosive gas, mist or vapour atmosphere is likely to occur in normal operation occasionally; i.e. Premix room;
    - Zone 2: area in which an explosive gas, mist or vapour atmosphere is not likely to occur in normal operation but if it occurs will persist for a short period only; i.e. Pressing machines.
2. After classifying the hazardous areas, select the electrical apparatus
3. Safety devices includes the 5 main factors:

    - Explosion proof component: Heaters, Mag-coupling, sensors for the heating chemicals, driving of chemical pump, checking chemical levels, etc.
    - Leak gas and heat detectors such as float switch, gas sensors, heat sensors, etc. for the detection of C5 leakage, C5 gas and extremely heat at specific areas.
    - Ventilation; N2 blanketing system: for the suction of C5 leakaged gas, and purging of oxygen in tanks, products and surroundings.
    - Grounding system to prevent any static charges generated and draining it into ground; and
    - Safety monitoring/Warning system to monitor, check and control of the C5-leaked equipment gas, area, etc.
4. Precautions: Other than the mentioned safety device in place, precautions still needed to be taken when handling C5 and related operation.
    - Prohibited items in C5 area such as welding, smoking, mobile phone, loitering, etc.
    - Protective outfit t be worn. Operating should avoid wearing and using static changes clothing
    - Operating personal should avoid wearing and using static charges clothing or tools

5. C5 handling:
    - C5 drums must be placed on trays to collect any accidental pillage and purge with N2,
    - Assigned operator must be trained on the handling. C5 must be stored in open-air and well ventilated security warehouse
6. Chemical contacts
    - Cleaning, medical consult doctor
    - Wash the eyes thoroughly when chemical gets into it accidentally
    - Take a shower to clean off any chemical when body is covered with chemical
    - See a doctor at the nearest clinic or hospital after wash up where necessary
7. When there is outbreak of fire:
    - Cut off equipment main power and activate fire extinguishing system
    - Evacuate personnel to designated safe area through escape route and heat count
    - Fire-fighting tam to isolate and extinguish the fire area with CO2 powder of foam type of extinguisher.
8. Prepare the safety report regularly and chemical response measures

9. Certification for good practice.

5 Institutional Arrangement

5.1 Organizations

As defined above, the foam chemicals are used for a long time in all countries and all foam producers are experienced in safe handling these chemicals such as, HCFC-141b, MDI, Polyol and methylene chloride. There was neither occupational health nor environment accident related to these chemical observed in the foam manufacturing in the country, except the adverse impact of the HCFC-141b on the Ozone Layer; however, the preventive measures must be put in place to mitigate the risk of occupational health and environment in using chemicals and the risk of fire and explosion in using cyclo-pentane for foam productions. The following institutions are involved in the implementation of environment protection for the foam production conversion:

44 foam producers that are eligible for funding under the Vietnam HPMP Stage II to convert HCFC based foam production to cyclo-pentane, HFO or water-blown technology will conduct the conversion in accordance with sub-grant agreement to be signed between the Vietnam HPMP PMU and the beneficiary. The beneficiary will play the main role in implementing the environment management plan and in carrying out the mitigation measures during the conversion and after conversion operation, and to prepare an Annual Environment Report as requested by the Law and Regulations of the Country.

The Vietnam HPMP PMU, set up by MONRE and the Vietnam National Ozone Unit will manage and coordinate implementation of the HPMP and sub-projects in foam sector phase out plan. The PMU or its hired consultant will also monitor the subproject implementation and the beneficiary's compliance with the occupational health and environment requirements.

The equipment supplier who will be awarded the contract for providing equipment and service for the conversion will provide the foam equipment and installation in the safe environment manners

The local government including the Environment Protection Agency, Fire Protection Police and Industrial Zone Management Body, the Department of Industrial Safety Techniques and Environment (DISTE) and the Department of Chemicals (DC) of MOIT to be invited by the MONRE/PMU will participate in controlling the company's compliance with the environment/fire protection regulations as per their functions defined by the Vietnam Laws.

The correlation among these stakeholders is described by a chart as follows:

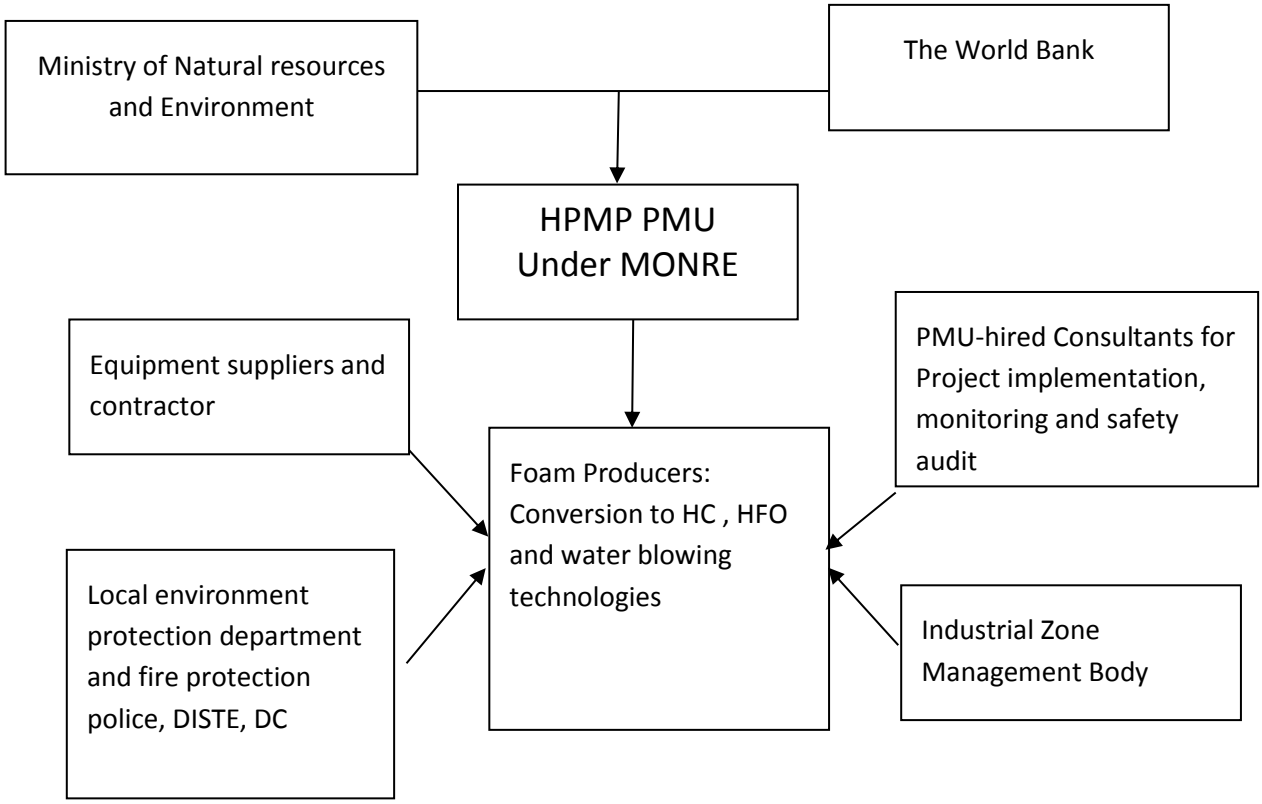
Ministry of Natural resources and Environment
The World Bank
HPMP PMU Under MONRE
Equipment suppliers and contractor
PMU-hired Consultants for Project implementation, monitoring and safety audit
Foam Producers: Conversion to HC , HFO and water blowing technologies
Local environment protection department and fire protection police, DISTE, DC
Industrial Zone Management Body

5.2 Responsibilities

Table 5: Responsibilities of Stakeholders for Implementation and Supervision of this EMP

Organization	Responsibilities
71 or 43 foam producers	To bear all responsibilities, but under monitoring and supervision of the World Bank and the PMU, for the conversion from HCFC-141b to Cyclo-pentane, HFO or to water blowing in foam manufacturing. Technical assistance will be provided through the Project to these enterprises. To request the chemical supplier to provide safety data sheets for each chemical and full guidance and training on safety handling these chemicals To follow stringently the safety data sheets when handling these chemicals To assign technical staff to (i) monitor the compliance with the safety occupational health and environment requirements on using chemicals and (ii) monitor the compliance with safety requirements when working with cyclo-pentane and fire protection rules during the conversion process and after conversion operation. To have safety audit and fire safety certificate from the fire protection authority. To keep the workers continuously trained, in cooperation with PMU and chemical and equipment suppliers on the safe foam production; To take all necessary measures to prevent leakage of the foam chemicals during the manufacturing process. To carry out the mitigation measures described in the section 4 above for each chemical and each case of chemical leakage. To have contract with local environment servicing company for collection and disposal of waste and empty chemical drums. To prepare the Site-specific mitigation measures for each sub-project as well, in addition to following the generic EMPs, as part of the subproject proposal during the project implementation stage To prepare an EIA following the national regulations in case that a new plant will be constructed to implement the HCFC phase-out subproject. To prepare and submit documents on fire prevention and protection to Department of Police To prepare and submit the measures on precautions and chemical emergency responses (guidance in Annex 4) to submit to Department of Industry and Trading. To prepare Annual Environment Report and send it to the local government environment agencies as requested by the Laws and copy to the PMU for monitoring purposes. To fulfil with Environment Protection Commitment made by the Company as defined by the Government regulations.
The PMU of Vietnam HPMP and NOU	To sign the subproject grant agreement (GA) with each participating foam enterprise. The sub-GA will list enterprise responsibilities and documents / plans it is obligated to adhere to on implementation of the EMP. To coordinate and supervise the subproject implementation, including all environmental and safety requirements listed in Section 3 by hiring technical consultants as necessary To ensure the project implementation will achieve the HCFC-141b phase-out target and safety requirements for the used chemicals and cyclo-pentane in accordance with the National Law and regulations and the World Bank safeguard policies and guidelines

	To cooperate with Department of Industry Safety Techniques and Environment and the Department of Chemicals under MOIT and Local Environment Protection Agencies, Local Fire Protection Police, and the Industrial Management Body to carry out the enforcement measures for the environment protection for each foam producer involved in the conversion. To prepare the project progress and environmental monitoring reports
Equipment Suppliers	To provide the environmentally safety design and installation of the foam production line using cyclo-pentane. To provide adequate training and guidance on safe operation of the supplied equipment, including the environmental and health risks and mitigation measures To provide good after-sale service and warranty in the case of accident due to the technical faults.
Enforcement Agencies:	Local Environment Protection Agencies, Local Fire Protection Polices, Department of Industry Safety Techniques and Environment, Department of Chemicals and Local IZ Management Body to be invited by the MONRE/MU to carry out the enforcement control and monitoring of the occupational health, environment and fire safety at each foam company.

6 Monitoring and Reporting

6.1 Environmental and Safety Monitoring Requirements and Monitoring Plan

The main environment and safety monitoring requirement for the HCFC phase out subproject is to assure negative impacts of the conversion on the occupational health and local environment could be reduced or prevented.

The Explosion Protection Document (EPD) is the main instrument to monitor explosion mitigation measure for the property of each enterprise and occupational safety. EPD shall be formulated for each beneficiary company by the management of each beneficiary company under guidance of the project technical consultant. The EPD will have to be prepared prior to the start-up of the production operation in each beneficiary company. EPD Guidelines are attached in the Annex 3.

The environment monitoring for the conversions to the cyclo-pentane at the foam producers eligible for the Project funding should be in accordance with Decree 80/2006/NĐ-CP dated August 09th, 2006; Circular 05/2008/TTBTNMT dated December 12th 2008 of MONRE; Circular of the Ministry of Industry and Trade No 28/2010/TT-BCT dated 28 June 2010 on the implementation of the Gov. Degree 108/2008/ND-CP on the implementation of the Law on Chemicals; the Circular No 08/2009/TT-BTNMT dated 15 July 2009 of the Ministry of Natural Resources and Environment on the Environment Management and Protection at industrial zones; and Circular of the Ministry of Police No 04/2004/TT-BCA on Fire Protection**,** and the Environment Protection Commitments of the company.

As practice, the surrounding environment at the Industrial Zones is monitored by the IZ management body and local environment agencies, and the Environment Monitoring Report is to be sent to the City/Provincial Department of Natural resources and Environment annually. In the case of large scale pollution or serious violation of the environment protection law and regulations, the environment police will conduct investigation and identify the responsibility of the personnel or organizational entities.

The monitoring will be conducted **during all phases** of the conversion to cyclo-pentane (and also the enterprise to convert HCFC-141b to water blowing technology when applicable) at each enterprise by

the enterprises, the PMU, local accredited agencies, and local authorities, it includes design and construction of the foam production workshop to meet safety requirement of cyclo-pentane usage, preparation of technical specifications of the equipment, installations and commissioning of procured equipment, trial, safety audit and production start-up, and the collection and disposal of the foam waste and empty chemical drums during foam production using cyclo-pentane or water blowing agent.

The Monitoring Plan is proposed as below for each of the 44 enterprise. The annual Environment Monitoring Report prepared by each company and reported by the PMU to the Bank team should include the progress on all mitigation measures proposed in the table 6 to address the environmental and safety impacts raised in Section 3 and Annex 2.

Table 6: MONITORING PLAN DURING CONVERSION AND OPERATION PHASES

Parameters to be monitored	**Place/ location**	**Method of monitoring**	**Time of monitoring**	**Standard applied**	**Monitoring Cost**	**Responsibility**	**Report to**
Design of the foam production workshop	for foam production sites	Verification done by foam technical consultant hired by the PMU and local authorities if applicable	Before the construction of the foam workshop and accepted by the enterprises	Safety requirements when working with cyclopentane (Explosion Protection Document and Annex 5)	Included in the conversion cost to be financed by the enterprise counterpart funding	Enterprises and PMU-hired foam technical consultant	PMU and the Bank team (it should be included in the sub project proposal)
Technical specifications and appropriate installation of the equipments	for foam production sites	Verifications done by PMU-hired consultant and/or by enterprises	Before procurement of the equipments	Equipment suppliers standard	Included in the conversion cost to be financed by the enterprise counterpart funding	Enterprises to prepare; installation will be included in the equipment purchase contract.	PMU and the Bank team (it should be included in the sub-project proposal)
Preparation of Explosion Protection Document (EPD)	For foam production sites	Prepared by each enterprise and reviewed by PMU consultant	Before foam production start-up	International experience	Included in the conversion cost to be financed by the enterprise counterpart funding	Enterprises to prepare and PMU-hired consultant to review	local authorities, PMU and the Bank team
For the new factories EIA is required.	Enterprises	EIA needs to be prepared by an accredited agency hired by enterprises	Before the construction of new factories	Local regulations	EIA preparation will be part of the conversion cost and	Enterprises to hire accredited agencies/ individuals; PMU to ensure that the EIA is	Local authorities for approval of the EIA

Parameters to be monitored	Place/ location	Method of monitoring	Time of monitoring	Standard applied	Monitoring Cost	Responsibility	Report to
					can be financed by the Project	approved by relevant authorities	
Spills and leakage of MDI, Polyol, blowing agent, MC (if any)	Chemical storage and foam production area	Visually	Continuously	Chemical suprplier's or as described in Section 3 above and Explosion Protection Document	5,000,000 VND per month for one technician/ staff to be financed by the enterprise counterpart funding	Enterprises and its assigned staff	Enterprise management body and to local authority in case of accident
Concentration of cyclo-pentane (not applicable to the shoe sole enterprise)	Storage, mixing and production area	Control panel and HC sensors	Continuously	Explosion Protection Document		Enterprises and its assigned staff	Enterprise management body
Chemical empty drums and foam wastes	Enterprises	Neutralize the remaining chemicals in the drums and having contractors for collection of waste and empty drums	As per contract weekly or monthly	Annex 2	1,500,000 VND per month to be financed by the enterprise counterpart funding	Enterprises to have a contract with qualified waste company and PMU will verify the contract.	IZ Management body or local authorities and included in the sub-project proposal
Safety audit	Enterprise foam production workshops	Local authorities to review documentation and pay site visits	Before foam production start-up	International experience and local requirements	Eligible expenditures to be financed by the project	Enterprises to be prepared for the safety audit; PMU-hired consultant to review and local authorities to approve the safety measures	local authorities, PMU, and the Bank

6.2 Supervision of sub-project implementation and environment requirements

The Vietnam HPMP PMU will be responsible for supervision of the implementation of the conversion sub-projects. A PMU-hired foam monitoring technical consultant will undertake supervision and prepare quarterly Environmental Monitoring Reports.

6.3 Implementation Schedule and Reporting Procedures

The PMU would carry out supervision of the implementation of the conversion sub-project during the implementation period of 2017 – 2021. After receiving enterprises' Project Progress Report, all mentioned conversion activities would be reviewed by PMU and the details of conversion activities such as time of conversion, testing, trials, and the project Environmental Monitoring Report should be included in the Project Progress Report. All activities of enterprises' conversion would be reported to PMU and the World Bank. The report is to submit semi-annually to the World Bank by January 31 and July 30 each year and annually to MONRE.

During conversion period of 2016– 2019, enterprises should detail all activities of conversion in the Progress Report such as implementation timing, testing, trials and proto sample to be produced, and progress and results of mitigation and monitoring measures. Frequency and duration of mitigation measures and monitoring as well as remedial actions, if any, showing consequences in accordance with the phasing-out targets and schedule should be inclusive. A breakdown timetable consisting of detailed activities should be inclusive in the report. Besides, the Annual Environmental and Safety Report prepared by enterprises should be submitted to provincial DONRE. A copy should be sent to PMU.

The implementation schedule and reporting procedure will be the following:

Table 7: Implementation Schedule and Reporting Procedure

Stakeholder/ Organization	Implementing schedule	Report on/to	Time	Frequency
PMU	2017 -	**The Project Implementation Progress Reports** of the conversion sub-project and submit to MONRE/World Bank **The Project Environment Monitoring Report** (with inputs from the enterprises), including environment monitoring requirements/indicators listed in Table 6 and submit to the Bank	31 July and 31 January by the end of each quarter	Semi-annually Quarterly
Enterprises	2017-	-**Annual Environment Monitoring Report** required by the national and local regulations prepared by the enterprise to Local Department of Natural Resources and Environment and copy to PMU. - **Subproject Implementation Progress Report** to PMU - Environment and safety issues, if any, to local authority and to PMU - Notification to the chemicals and equipment suppliers and copy to the PMU on any faults happened during the conversion and after conversion operation - Site-EMP report for existing enterprises or EIA report for enterprises to build new factories for implementation of subprojects	By 31 December each year By 30 June and 31 December When needed When the fault takes place One-time reporting before construction or installation starts and EIA should be	Yearly Semi-annually One time

		- Plans or Measures on chemical precautions and emergency response	approved by local EPA One time before commissioning and approved by DOIT	One time

6.4 Environmental Compliance Framework

Warranty of the equipment supplier and its responsibility in case of fire risk, accidents happening due to the fault of the system will be defined in the contract for equipment supply.

7 Training Plan

The training for the enterprise technical staff and all workers of each foam company on the safe foam production using cyclo-pentane will be conducted by the Vietnam HPMP PMU in cooperation with chemical and equipment suppliers and local fire polices and local EPAs. The training courses will be conducted regularly, particularly one is at the beginning of the Project in early 2017 (to help equipment procurement), one before the production start-up and several ones during the conversion and one at the completion of the Project in late 2020 when a project completion report is prepared by the enterprise and accepted by the PMU and the Bank.

In the case the foam enterprises request more training for the new technical staff and workers, the Vietnam PMU will provide funding for additional training courses as it deems necessary.

Table 8: Training Plan

Organizer	Number of Courses	Participants	Frequency	Duration	Content	Budget
PMU in cooperation with chemical and equipment suppliers and local fire polices/EPAs	10 – 12 for 43 or 71 foam enterprises	All technical staff and workers of foam companies	One at the beginning of the project in early 2012 Before production start-up and after conversion operation About twice a year from 2017 to 2021	1-2 days	The Montreal Protocol and HCFC phase out; Environment and fire risk during the conversion and after conversion operations Environment and OHS risk mitigations measures Safe handling of chemical and cyclo-pentane Chemical and foam waste collection and treatment Emergency Responses in case of accidents Formulation of Explosion Protection	USD 25,000

					Document for each enterprise (guidance takes about one day per company – however can be done at one work shop)	

8 Budget

8.1 Estimated cost for environmental management during design and foam workshop construction phase

The sub-project beneficiary and selected equipment supplier will be responsible for the design of the foam production workshops that must meet all the environment, occupational health (in regards to safe handling of MDI) and safety requirements to the conversion to cyclo-pentane technology in 27 PU foam producers and to the HFO and water based foaming system in the manufacture of polyurethane foam in various applications.

The technical staff of the foam beneficiary and the PMU foam technical consultant for the sub project implementation will undertake the supervision of the workshop design and construction.

The cost for these phases will be borne by the beneficiary from their counterpart funding, except that the PMU consultant cost will be borne by the PMU.

8.2 Estimated annual cost for environmental management during operation phase

During the operation phase, the foam producer should assign a technical staff to control the chemical spill and leakage, if any and the cost for this assignment should be monthly salary of average 5,000,000 VND for the whole operation cycle.

For the waste collection, including empty chemical drums and foam wastes, the monthly cost should be 1,000,000 – 1,500,000 VND depending the location and contract with local environment servicing company.

These costs will be borne by the beneficiary from their counterpart funding.

8.3 Cost for training activities

The training cost will be covered by the Project under the Project Component 2. It is estimated that the funding for these training activities will be 25,000 USD.

ANNEX 1: ENVIRONMENTLA CODES OF PRACTICE (ECOP) for SMALL CIVIL WORKS

1. Objectives

The Environmental Codes of Practice (ECOP) is prepared to manage small environmental impacts during construction. The ECOPs will apply to manage small scale infrastructure investments subproject. ECOP will be a mandatory part of construction contract or bidding documents so that contractor complies with environmental covenants. PMU/VCIC and construction supervisors will be responsible for monitoring of compliance with ECOP and preparing the required reports.

There are a number of national technical regulations related to environmental, health and safety that apply to construction activities below:

- *Water Quality*: (QCVN 01:2009/BYT, QCVN 02:2009/BYT, QCVN 08:2008/BTNMT, QCVN 09:2008/BTNMT, QCVN 10:2008/BTNMT, TCVN 5502:2003; TCVN 6773:2000, TCVN 6774:2000, TCVN 7222:2002)
- *Wastewater (*QCVN 14:2008/BTNMT; QCVN 40:2011/BTNMT)
- *Air Quality* (QCVN 05:2013/BTNMT, QCVN 06:2008/BTNMT)
- *Soil Quality (QCVN 03:2008/BTNMT)*
- *Solid Waste Management* (TCVN 6696:2009, QCVN 07:2009)
- *Vibration and Noise* (QCVN 27:2010/BTNMT, QCVN 26:2010/BTNMT)
- *Labor Health and Safety*: Decision No.3733/2002/QĐ-BYT issued by Ministry of Healthcare dated on 10/10/2002 about the application of 21 Labor health and safety standards that concerned about microclimate, noise, vibration, Chemicals – Permitted level in the working environment

2. Responsibilities

The SME owner and Contractors are the key entities responsible for implementation of this ECOP. Key responsibilities of PMU/VCIC and the contractors are as follows:

(a) PMU

- PMU/VCIC is responsible for ensuring that the ECOP is effectively implemented. The PMU/VCIC will assign a qualified staff to be responsible for checking implementation compliance of Contractors, include the following: (a) monitoring the contractors' compliance with the environmental plan, (b) taking remedial actions in the event of non-compliance and/or adverse impacts, (c) investigating complaints, evaluating and identifying corrective measures; (d) advising the Contractor on environment improvement, awareness, proactive pollution prevention measures; (e) monitoring the activities of Contractors on replying to complaints; (f) providing guidance and on-the-job training to field engineers on various aspects to avoid/mitigate potential negative impacts to local environment and communities during construction.

(b) Contractor

- Contractor is responsible for carrying out civil works and informs PMU, local authority and community about construction plan and risks associated with civil works. As such, contractor is responsible for implementing agreed measures to mitigate environmental risks associated with its civil works.

- Contractor is required to obey other national relevant legal regulations and laws.

Part 1 – Contractor's Responsibilities

This is an example and is not necessarily a full treatment of all requirements for a specific project. For example, there might be reason to have contractor deal with sexually transmitted diseases, medical and hazardous waste s (e.g., oil from vehicle or furnace repair and similar, oily rags).

Issues/Risks	Mitigation Measure
1) Dust generation/ Air pollution	• The Contractor implement dust control measures to ensure that the generation of dust is minimized and is not perceived as a nuisance by local residents, maintain a safe working environment, such as: - water dusty roads and construction sites; - covering of material stockpiles; - Material loads covered and secured during transportation to prevent the scattering of soil, sand, materials, or dust; - Exposed soil and material stockpiles shall be protected against wind erosion.
2) Noise and vibration	• All vehicles must have appropriate "*Certificate of conformity from inspection of quality, technical safety and environmental protection"* following Decision No. 35/2005/QD-BGTVT; to avoid exceeding noise emission from poorly maintained machines.
3) Water pollution	• Portable or constructed toilets must be provided on site for construction workers. Wastewater from toilets as well as kitchens, showers, sinks, etc. shall be discharged into a conservancy tank for removal from the site or discharged into municipal sewerage systems; there should be no direct discharges to any water body. • Wastewater over permissible values set by relevant Vietnam technical standards/regulations must be collected in a conservancy tank and removed from site by licensed waste collectors. • At completion of construction works, water collection tanks and septic tanks shall be covered and effectively sealed off.
4) Drainage and sedimentation	• The Contractor shall follow the detailed drainage design included in the construction plans, to ensure drainage system is always maintained cleared of mud and other obstructions. • Areas of the site not disturbed by construction activities shall be maintained in their existing conditions.
5) Solid waste	• At all places of work, the Contractor shall provide litter bins, containers and refuse collection facilities. • Solid waste may be temporarily stored on site in a designated area approved by the Construction Supervision Consultant and relevant local authorities prior to collection and disposal. • Waste storage containers shall be covered, tip-proof, weatherproof and scavenger proof.

Issues/Risks	Mitigation Measure
	• No burning, on-site burying or dumping of solid waste shall occur. • Recyclable materials such as wooden plates for trench works, steel, scaffolding material, site holding, packaging material, etc. shall be collected and separated on-site from other waste sources for reuse, for use as fill, or for sale. • If not removed off site, solid waste or construction debris shall be disposed of only at sites identified and approved by the Construction Supervision Consultant and included in the solid waste plan. Under no circumstances shall the contractor dispose of any material in environmentally sensitive areas, such as in areas of natural habitat or in watercourses.
6) Chemical or hazardous wastes	• Used oil and grease shall be removed from site and sold to an approved used oil recycling company. • Used oil, lubricants, cleaning materials, etc. from the maintenance of vehicles and machinery shall be collected in holding tanks and removed from site by a specialized oil recycling company for disposal at an approved hazardous waste site. • Unused or rejected tar or bituminous products shall be returned to the supplier's production plant. • Store chemicals in safe manner, such as roofing, fenced and appropriate labeling.
7) Disruption of vegetative cover and ecological resources	• Areas to be cleared should be minimized as much as possible. • The Contractor shall remove topsoil from all areas where topsoil will be impacted on by rehabilitation activities, including temporary activities such as storage and stockpiling, etc; the stripped topsoil shall be stockpiled in areas agreed with the Construction Supervision Consultant for later use in re-vegetation and shall be adequately protected. • The application of chemicals for vegetation clearing is not permitted. • Prohibit cutting of any tree unless explicitly authorized in the vegetation clearing plan. • When needed, erect temporary protective fencing to efficiently protect the preserved trees before commencement of any works within the site. • The Contractor shall ensure that no hunting, trapping shooting, poisoning of fauna takes place.
8) Traffic management	• Before construction, carry out consultations with local government and community and with traffic police. • Significant increases in number of vehicle trips must be covered in a construction plan previously approved. Routing, especially of heavy vehicles, needs to take into account sensitive sites such as schools, hospitals, and markets. • Installation of lighting at night must be done if this is necessary to ensure safe traffic circulation.

Issues/Risks	Mitigation Measure
	• Place signs around the construction areas to facilitate traffic movement, provide directions to various components of the works, and provide safety advice and warning. • Employing safe traffic control measures, including road/rivers/canal signs and flag persons to warn of dangerous conditions. • Avoid material transportation for construction during rush hour. • Signpost shall be installed appropriately in both water-ways and roads where necessary.
9) Interruption of utility services	• Provide information to affected households on working schedules as well as planned disruptions of water/power at least 2 days in advance. • Any damages to existing utility systems of cable shall be reported to authorities and repaired as soon as possible.
10) Restoration of affected areas	• Cleared areas such as disposal areas, site facilities, workers' camps, stockpiles areas, working platforms and any areas temporarily occupied during construction of the project works shall be restored using landscaping, adequate drainage and revegetation. • Trees shall be planted at exposed land and on slopes to prevent or reduce land collapse and keep stability of slopes. • Soil contaminated with chemicals or hazardous substances shall be removed and transported and buried in waste disposal areas.
11) Worker and public Safety	• Training workers on occupational safety regulations and provide sufficient protective clothing for workers in accordance with applicable Vietnamese laws. • Install fences, barriers, dangerous warning/prohibition site around the construction area which showing potential danger to public people. • The contractor shall provide safety measures as installation of fences, barriers warning signs, lighting system against traffic accidents as well as other risk to people and sensitive areas. • If previous assessments indicate there could be unexploded ordnance (UXO), clearance must be done by qualified personnel and as per detailed plans approved by the Construction Engineer.
12)Solid waste generated from rehabilitation	• The Contractor shall develop a solid waste control procedure (storage, provision of bins, site clean-up schedule, bin clean-out schedule, etc.) before construction and strictly comply with developed procedure during construction activities. • The Contractor shall provide litter bins, containers and waste collection facilities at all places of work. • The Contractor store solid waste temporarily on site in a designated place prior to off-site transportation and disposal through a licensed waste collector. • The Contractor shall dispose of waste at designated place identified and approved by local authority. Opened burn or bury of solid waste in hospital shall

Issues/Risks	Mitigation Measure
	not be allowed. Under no circumstances shall the contractor dispose of any material in environmentally sensitive areas, such as watercourses • Recyclable materials such as wooden plates for trench works, steel, scaffolding material, site holding, packaging material, etc shall be segregated and collected on-site from other waste sources for reuse or recycle (sale). • The removal of asbestos-containing materials or other toxic substances shall be performed and disposed of by specially trained and certified workers.
13) Communication with local communities	• The contractor shall coordinate with local authorities (leaders of local communes, leader of villages) for agreed schedules of construction activities at areas nearby sensitive places or at sensitive times (e.g., religious festival days). • Copies in Vietnamese of these ECOPs and of other relevant environmental safeguard documents shall be made available to local communities and to workers at the site. • Disseminate project information to affected parties (for example local authority, enterprises and affected households, etc) through community meetings before construction commencement. • Provide a community relations contact from whom interested parties can receive information on site activities, project status and project implementation results. • Inform local residents about construction and work schedules, interruption of services, traffic detour routes and provisional bus routes, blasting and demolition, as appropriate. • Notification boards shall be erected at all construction sites providing information about the project, as well as contact information about the site managers, environmental staff, health and safety staff, telephone numbers and other contact information so that any affected people can have the channel to voice their concerns and suggestions.
14) Chance find procedures	• If the Contractor discovers archeological sites, historical sites, remains and objects, including graveyards and/or individual graves during excavation or construction, the Contractor shall: • Stop the construction activities in the area of the chance find; • Delineate the discovered site or area; • Secure the site to prevent any damage or loss of removable objects. In cases of removable antiquities or sensitive remains, a night guard shall be arranged until the responsible local authorities or the Department of Culture and Information takes over; • Notify the Construction Supervision Consultant who in turn will notify responsible local or national authorities in charge of the Cultural Property of Viet Nam (within 24 hours or less); • Relevant local or national authorities would be in charge of protecting and preserving the site before deciding on subsequent appropriate procedures. This

Issues/Risks	Mitigation Measure
	would require a preliminary evaluation of the findings to be performed. The significance and importance of the findings should be assessed according to the various criteria relevant to cultural heritage; those include the aesthetic, historic, scientific or research, social and economic values; • Decisions on how to handle the finding shall be taken by the responsible authorities. This could include changes in the layout (such as when finding an irremovable remain of cultural or archeological importance) conservation, preservation, restoration and salvage; • If the cultural sites and/or relics are of high value and site preservation is recommended by the professionals and required by the cultural relics authority, the Project's Owner will need to make necessary design changes to accommodate the request and preserve the site; • Decisions concerning the management of the finding shall be communicated in writing by relevant authorities; • Construction works could resume only after permission is granted from the responsible local authorities concerning safeguard of the heritage.

Part 2 – Contractor's Workers Environmental Code of Conducts

This is an example for typical project, but for a specific project, some other requirements might be relevant. For example, washing hands protocol, or agreeing to attend STDs (Sexually Transmitted Diseases) workshops.

Do:	Do not
◆ Use the toilet facilities provided – report dirty or full facilities ◆ Clear your work areas of litter and building rubbish at the end of each day – use the waste bins provided and ensure that litter will not blow away. ◆ Report all fuel or oil spills immediately & stop the spill from continuing. ◆ Smoke in designated areas only and dispose of cigarettes and matches carefully. (Littering is an offence.) ◆ Confine work and storage of equipment to within the immediate work area.	◆ Remove or damage vegetation without direct instruction. ◆ Make any fires. ◆ Poach, injure, trap, feed or harm any animals – this includes birds, frogs, snakes, etc. ◆ Enter any fenced off or marked area. ◆ Drive recklessly or above speed limit ◆ Allow waste, litter, oils or foreign materials into the stream ◆ Litter or leave food lying around. ◆ Cut trees for any reason outside the approved construction area ◆ Buy any wild animals for food; ◆ Use unapproved toxic materials, including lead-based paints, asbestos, etc.; ◆ Disturb anything with architectural or historical value ◆ Use of firearms (except authorized security guards)

◆ Use all safety equipment and comply with all safety procedures. ◆ Prevent contamination or pollution of streams and water channels. ◆ Ensure a working fire extinguisher is immediately at hand if any "hot work" is undertaken e.g. welding, grinding, gas cutting etc. ◆ Report any injury of workers or animals. ◆ Drive on designated routes only. ◆ Prevent excessive dust and noise	◆ Use of alcohol by workers during work hours ◆ Wash cars or machinery in streams or creek ◆ Do any maintenance (change of oils and filters) of cars and equipment outside authorized areas ◆ Dispose trash in unauthorized places ◆ Have caged wild animals (especially birds) in camps ◆ Work without safety equipment (including boots and helmets) ◆ Create nuisances and disturbances in or near communities ◆ Use rivers and streams for washing clothes ◆ Dispose indiscriminately rubbish or construction wastes or rubble ◆ Spill potential pollutants, such as petroleum products ◆ Collect firewood ◆ Do explosive and chemical fishing ◆ Use latrines outside the designated facilities; and ◆ Burn wastes and/or cleared vegetation.

ANNEX 2: ADVERSE IMPACTS AND MITIGATION MEASURES OF CHEMICALS USED IN FOAM PRODUCTION

1. **Predicted Environmental and OHS Impacts from Chemicals in Foam Production:**

The project includes foaming technology conversion in 71 PU foam manufacturing enterprises. The PU Foam production process is illustrated below:

For the 71 PU Rigid Foam producers and one shoe sole manufacturing: mixing process

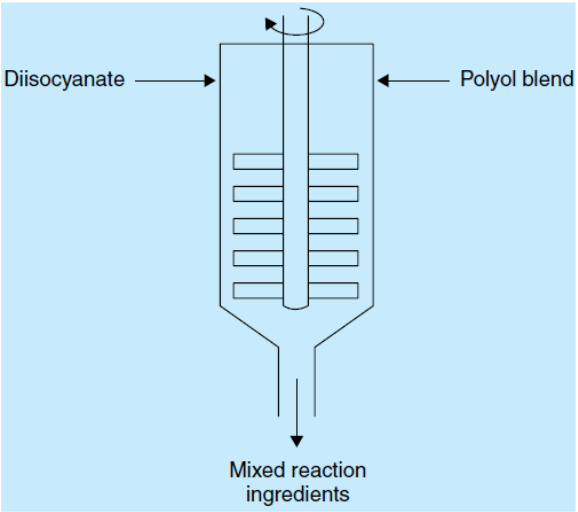

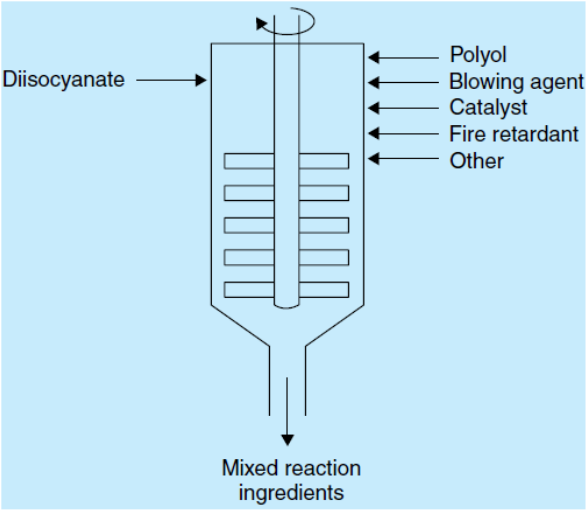

Two-stream processing: Polyol blend contains as premixed; polyol, HCFC-141b, (in future HFO-1233zd(E), one catalyst or blend of several (amine based), fire retardants (TCEP or TCEP), water, silicone etc.	Multi-stream processing

Adverse impacts of the chemicals used in the polyurethane foam manufacturing process (see a summary in Table 3):

MDI (4,4'-Methylenediphenyl diisocyanate)

<u>ENVIRONMENT IMPACTS</u>

Movement & Partitioning

- In the aquatic and terrestrial environment, movement is expected to be limited by its reaction with water forming predominantly insoluble polyureas.

Persistence and Degradability

- In the aquatic and terrestrial environment, material reacts with water forming predominantly insoluble polyureas which appear to be stable. In the atmospheric environment, material is expected to have a short tropospheric half-life, based on calculations and by analogy with related diisocyanates.

Eco-toxicity

- The measured eco-toxicity is that of the hydrolyzed product, generally under conditions maximizing production of soluble species. Material is not classified as dangerous to aquatic organisms (LC50/EC50/IC50 greater than 100 mg/L in most sensitive species).

OHS IMPACTS

- Harmful by inhalation
- Irritating to eyes, respiratory system and skin
- May cause sensitisation by inhalation and skin contact

Where do you find these impacts?

- Drums –decontamination
- Spray applications
- High temperature operations
- Foam curing area
- Polyol/ Isocyanate stored together
- Bulk off-loading of wrong chemical into a bulk tank
- Spillage into a drain
- MDI in eyes or other soft tissue
- MDI in wet disposal (waste) drums

POLYOLS

The major ingredient in polyol resin blends is a polyol or a mixture of several polyols. Although polyols differ in molecular weight, and somewhat in chemical structure, all are very large alcohol-type molecules. Polyols typically make up about 90% by weight of a polyol resin blend. While some polyols may be slightly irritating to the eyes and skin, most are not. In addition to the relatively non-toxic polyol, polyol resin blends contain a number of additives that may be more hazardous (see below). This makes it important to avoid skin and eye contact with the blend.

Note: The principal hazard associated with polyol is a safety hazard—spilled material can be very slippery.

Pre-blended polyols, which are used by foam manufacturers in Vietnam, include also following chemicals in small quantity.

Catalysts (0.5 to 3%)

Some amine catalysts and various metal catalysts (e.g., tin, potassium, bismuth) can be strongly basic. Catalysts may be respiratory irritants and/or irritants to the eyes and skin. Some amine catalysts are skin sensitizers, causing persistent dermatitis and skin problems, and/or are corrosive to the skin. Each catalyst package may vary depending upon the application and manufacturer. Vietnamese foam manufacturers, users of "systems" do not handle the catalyst package separately. It is already incorporated into the polyol resin blend at typically less than 5% by weight. Therefore, the hazards associated with the catalyst package itself are reduced greatly.

Surfactants (0 – 2 %)

There are many commercial silicone surfactants whose structure and/or composition have been varied to obtain specific properties in the finished polyurethane foam. Surfactants, in general, are minimally or non-irritating and of low order toxicity by all typical routes of administration. However, some

surfactants may be eye and/or skin irritants. Surfactants generally are a minor constituent of the polyol resin blend formulation (0 to 2% by weight).
Some surfactants are flammable; appropriate fire safety precautions must be taken.

Colorants (Shoe sole manufacturer)
The coloring of polyurethane foam is obtained with pigment pastes, dyes, or dispersions, collectively called "colorants." Their presence at low levels (typically less than 1% by weight) in the blended polyol resin minimizes the potential for significant exposure. Again, skin and eye contact with the blend should be avoided.

Blowing Agents
A blowing agent is the ingredient that forms the cells in polyurethane foam. Blowing agents that currently are used include HCFC-141b, and in the future c-pentane, HFO-1233zd(E) or FEA-1100 and water (reacts with diisocyanate to form CO2).

Like CO2, many blowing agents are heavier than air. In high concentrations, they can displace oxygen available for breathing. HCFCs and HFOs in high concentrations can cause irregular heartbeat. Use general and/or local ventilation as necessary to prevent over exposure. Some blowing agents also are irritants to the eyes and skin.

Flame-Retardants
Some of the polyol resin blends used to make polyurethane foam for building construction contain flame-retardants. Because a variety of chemicals are used as flame retardants, it is difficult to offer more than general guidelines. Flame-retardants are incorporated into the polyol resin blend at low concentrations (typically less than 10% by weight). Avoiding skin and eye contact with the resin blend will minimize exposure to these materials.

ENVIRONMENT IMPACTS

Movement & Partitioning

- No bioconcentration is expected because of the relatively high molecular weight (MW greater than 1000).
- Based largely or completely on information for similar material(s). No bioconcentration is expected because of the relatively high water solubility.

Persistence and Degradability

- Based largely or completely on information for similar material(s). Material is expected to biodegrade only very slowly (in the environment). Fails to pass OECD/EEC tests for ready biodegradability.

Ecotoxicity

- Data for Component: Phenol, polymer with formaldehyde , propylene oxide and ethylene oxide: Material is harmful to aquatic organisms (LC50/EC50/IC50 between 10 and 100 mg/L in most sensitive species).

OHS IMPACTS

Eye Contact

- Many polyols cause only slight temporary irritation if they contact the eyes. Safety glasses are recommended for minimum eye protection when these polyols are handled or used. Amine-initiated and Mannich-based polyols can cause moderate to severe irritation and injury to the eyes. Therefore, chemical goggles are recommended for handling these materials, as stated on the MSDS and product label.

Inhalation

- Because of their low vapor pressure, polyols do not pose a significant inhalation hazard when handled at room temperature. Under most conditions of use, good general ventilation will be adequate and no respiratory protections are needed. If materials are heated, or if a fine mist is being generated, local ventilation and respiratory protection may be required.

Ingestion

- Polyols are low to very low in acute oral toxicity. Most LD50 values range from 2.0 grams to greater than 10 grams per kilogram of body weight for laboratory animals. A few have oral LD50 values between 1,000 and 2,000 mg/kg. Swallowing small amounts of these polyols is not likely to cause injury. Although swallowing large amounts of polyols may cause toxic effects, the possibility of such ingestion is unlikely with proper industrial handling and use.

CYCLO-PENTANE

- Flash point -40C to -20C (lowest temperature at which liquid releases sufficient vapor to ignition
- Auto ignition temperature ca. 280°C (where the vapor-air mixture ignites a hot surface)
- Explosive vapor –air mixtures:
  - Lower explosive limit: 1.1 vol-% = 32 g/m^3
  - Upper explosion limit: 8.7 vol-% = 267g/m^3
  - (Evaporation rate at 20°C – 30°C > 2.4 kg/h per m^2 surface)
  - Vapor has higher density than air (accumulates on the lowest point of the workshop)
- Easy built up of static electric charge
- Highly flammable

<u>ENVIRONMENT IMPACTS</u>

- Harmful to aquatic organisms, may cause long-term adverse effects in the aquatic environment.
- Given its physical and chemical characteristics, the product shows very little mobility in the ground.

<u>OHS IMPACTS</u>

- Highly flammable
- Vapor/air mixtures are explosive
- Dizziness. Headache. Nausea. Unconsciousness. Weakness.

HFO-1233zd(E)

This chemical will be mainly used as a physical foaming agent of the pre-blended polyol system like HCFC-141b in the present foam / polyol formulations.

Honeywell Solstice® and Arkema 1233zd(E), trans-1-chloro-3,3,3-trifluoropropene is a liquid halogenated olefin, which has been developed as a blowing agent for polymer foams. This product is intended for use as a low GWP, non-flammable replacement blowing agent for applications where hydrocarbons, HFCs, HCFCs, and other liquid blowing agents are currently used. Solstice LBA is a non-flammable liquid having a room temperature boiling point. The physical properties, environmental properties, transportation requirements and exposure guidelines of HFO-1233zd(E) are summarized in Tables 1 and 2 below.

Table 1 Physical and environmental properties of HFO-1233zd(E)

Chemical Name	Trans- 1-chloro-3,3,3-trifluoropropene
Molecular Formula	(E)CF_3-CH=CClH
CAS Number	102687-65-0
Molecular Weight [g/mol]	130
Atmospheric Life[1]	26 Days
GWP[2]	1
ODP[3]	~0
Boiling Point	19 °C / 66 °F
Latent Heat of Vaporization at boiling point	194 kJ/kg / 83.4 BTU/lb
Freezing Point	-107 °C / -161 °F
Vapor Pressure at 68 °F [20°C]	106.3 kPa / 15.4 psia
Liquid Density at 68 °F [20°C]	1.296 g/ml / 10.83 lb/gal
Vapor Thermal Conductivity @ 20 °C	10.2 mW/mK / 0.0708 BTU in/ ft^2 hr °F
Surface Tension at 68 °F [20°C]	13.3dyne/ cm
Liquid Viscosity at 68 °F [20°C]	0.489 cP
Solubility of water in Solstice LBA @ 25 °C	460 ppm
KB [kauri- butanol] value	25
Flash Point[4]	None
Vapor Flame Limits[5]	None

Table 2. Transportation requirements and exposure guidelines to HFO-1233zd(E)

Transportation Requirements	
UN Number	UN 3163
Proper Shipping Name	LIQUEFIED GAS, N.O.S. (Trans-1-Chloro-3,3,3-trifluoropropene)
Hazard Class	2.2
Exposure Guidelines	
OEL	800 ppm

Toxicity: Overall results from a series of genetic studies indicate that HFO_1233zd(E) is nonmutagenic and non-teratogenic. Based on extensive toxicity testing, Honeywell has established a preliminary Occupational

Exposure Limit (OEL) of 800 ppm. Anyone who uses or handles HFO-1233zd(E) should carefully review the MSDS and product label prior to use.

Environmental: HFO-1233zd(E) is a halogenated olefin with a GWP 1. As with all materials, care should be taken to avoid releases into the environment. Treatment or disposal of wastes generated by use of this product may be of concern depending on the nature of the wastes and the means of discharge, treatment or disposal.

Storage & Handling: HFO-1233zd(E) should be stored in a cool, well-ventilated area. The materials should only be stored in an approved cylinder.. The container and its fittings should be protected from physical damage. It should neither be punctured or dropped, nor exposed to open flames, excessive heat or direct sunlight. The container's valves should be tightly closed after use and when the container is empty. Solstice LBA should not be mixed with either air or oxygen at elevated pressures. If pressurization is required in the application or process, the use of dry nitrogen is recommended.

METHYLENE CHLORIDE

Dichloromethane (Methylene Chloride) is used as a cleaning agent. It is the least toxic of the simple chlorohydrocarbons, but it is not without its health risks as its high volatility makes it an acute inhalation hazard. Dichloromethane is also metabolized by the body to carbon monoxide potentially leading to carbon monoxide poisoning. Acute exposure by inhalation has resulted in optic neuropathy and hepatitis. Prolonged skin contact can result in the dichloromethane dissolving some of the fatty tissues in skin, resulting in skin irritation or chemical burns.

It may be carcinogenic, as it has been linked to cancer of the lungs, liver, and pancreas in laboratory animals. In many countries, products containing dichloromethane must carry labels warning of its health risks. In Europe, the Scientific Committee on Occupational Exposure Limits (SCOEL) recommends for dichloromethane an occupational exposure limit (8h time-weighted average) of 100 ppm and a short-term exposure limit (15 min) of 200 ppm.

Potential Acute Health Effects: Very hazardous in case of eye contact (irritant), of ingestion, of inhalation. Hazardous in case of skin contact (irritant, permeator). Inflammation of the eye is characterized by redness, watering, and itching.

Potential Chronic Health Effects: CARCINOGENIC EFFECTS: Classified + (Proven.) by OSHA. Classified 2B (Possible for human.) by IARC. MUTAGENIC EFFECTS: Not available. TERATOGENIC EFFECTS: Not available. DEVELOPMENTAL
TOXICITY: Not available. The substance is toxic to lungs, the nervous system, liver, mucous membranes, central nervous system (CNS). Repeated or prolonged exposure to the substance can produce target organs damage.

2. **Description of Mitigation Measures for Polyurethane Foam Production Using Hydrocarbon**

Detailed Mitigation Measures:

MDI (4,4'-Methylenediphenyl diisocyanate)

<u>All minor spills and leaks</u> (e.g. area less than 2 m^2) should be contained immediately (e.g., by diking with an absorbent material) to prevent further contamination of the surrounding area.

<u>In the case of larger spills and leaks</u> (e.g. area above 2 m^2), evacuate workers from the close by workshop.

Put PPE including respirator:

Cover with fire extinguishing foam or sand to prevent escape of MDI vapors

All spillages

- Prevent MDI entering drains
- Control spill with wet sand absorbent
- Put contaminated sand in steel drums (max. 2/3 full) and leave open to prevent pressure build up
- Treat as MDI waste

Carefully review and understand the following safety recommendations and precautions before handling, storing or disposing of MDI products.

- Always have a sufficient quantity of absorbent material available, such as sawdust, vermiculite, all-purpose commercial oil absorbent, dirt, sand, clay, cob grit or Milsorb. Avoid materials such as cement powder.
- Ventilate the contaminated area. Open all doors and windows. To avoid inhaling the vapors of either isocyanate or the decontamination byproducts, workers should could wear appropriate respirators (e.g., a positive-pressure, self-contained breathing apparatus).
- If necessary, dike the spill with sand, absorbent clays, etc. If there are standing pools of MDI, the liquid may be pumped (using a drum pump or similar equipment) into a closed-top but not sealed container for disposal (see Isocyanate Disposal). Any equipment and containers used must be clean and dry. Properly decontaminate all equipment after use.
- If the source of the leak is a damaged or leaking drum, it should be moved to an isolated, well-ventilated area and the contents carefully transferred to other suitable, leak-free containers. The damaged drum or container should be decontaminated and destroyed. Also, the new container should be blanketed with a dry gas pad (see Moisture Control) and then carefully monitored to ensure that atmospheric moisture does not cause over-pressurization.
- If the source of the leak is a damaged or leaking stationary container (e.g., a storage or holding tank), it should be temporarily patched (a rubber plug is ideal, although a wooden plug will work) and the contents carefully transferred to other suitable, leak-free containers. The new containers should be blanketed with a dry gas pad (see Moisture Control) and then carefully monitored to ensure that atmospheric moisture does not cause over-pressurization.
- The empty stationary container must be thoroughly cleaned (see the Cleaning and Decontamination section in Isocyanate Disposal) before permanent repairs can be made.
- After any needed diking (with the preferred absorbent) is finished and any liquid pools have been recovered, promptly cover the leak or spill completely with plenty of dry absorbent material. The material should then be shoveled into drums or buckets and removed to a location where the neutralization process can be safely completed. Fill drums only half full to allow for expansion.
- Attempt to neutralize by using a suitable decontaminant solution:
  - Formulation 1: sodium carbonate 5-10 percent; liquid detergent 0.2-2 percent; water to make 100 percent
  - Formulation 2: concentrated ammonia solution 3-8 percent; liquid detergent 0.2-2 percent; water to make 100 percent. *Note: If ammonia is used, use good ventilation to prevent vapor exposure.*
- For more effective coverage, and to ensure greater contact between the absorbent and the isocyanate, use an industrial-type, heavy-duty broom to sweep the absorbent into the spill. After sweeping, wrap the broom carefully in plastic to contain the isocyanate. Dispose of the wrapped broom properly (one method is incineration). When disposing of any wastes, be sure all applicable regulations are met.
- Shovel the absorbent/isocyanate mixture into an open-top container; fill the container no more than half full. Cover to prevent spills of the absorbent, but do not make pressure tight. Remove the container to a safe disposal site, away from the operating area, to complete the container neutralization reaction. Add neutralizing solution to the isocyanate. The neutralization reaction produces carbon dioxide, so it is important not to close the containers tightly to avoid explosive rupture due to gas pressure.
- The open-top containers should stand undisturbed for at least 48 hours to allow complete neutralization. Plastic pails may be used if the waste is to be incinerated.

- After standing for 48 hours, the container may be closed (though not pressure tight) and properly disposed of. (See Isocianate Disposal).
- Immediately after shoveling the absorbent/MDI mixture from the floor, complete the decontamination by mopping the floor with one of the decontamination formulations listed above, allowing the solution to stand for at least 10 minutes. Be sure the area is well ventilated, both during and after cleanup.
- As a precaution, carefully test the atmosphere for residual isocyanate vapor. Instruments designed for MDI monitoring are commercially available.
- When safe working conditions have been re-established, remove and decontaminate or dispose of protective equipment and return to normal operation.

Polyol – Polyol blend – Pre-blended polyol

Minor Spills: Small **spills** on hard surfaces can be wiped or mopped up. They can also be absorbed by the use of sawdust or other absorbent material and then swept up for disposal.

Large and Major Spills: When large spill**s** occur, the polyol should be contained by creating ditches or dikes with absorbent material. The polyol can then be pumped into containers, such as drums or tank trucks, for disposal.

Examples of major spills include overturned tank trucks or tank cars, and ruptured storage tanks. In the event of a major spill, or moderately large spills in which there is doubt or uncertainty regarding cleanup procedures, call Chemical suppliers' Distribution Emergency Response System or CHEMTREC.

There are general recommendations for handling polyol resin blends:

- Spills should be contained by, and covered with large quantities of sand, earth or any other readily available absorbent material which is then brushed in vigorously to assist absorption. For cleaning use water and detergent soap, never any solvents like acetone or Methylene Chloride.
- The mixture can then be collected into drums and removed for disposal. Wash area from residues with soap and water and rinse down. Contaminated water should be retained, not being allowed to flow into ground or surface water.
- Clean up spills promptly to minimize the potential for falls—polyol resin blends are slippery.
- Avoid eye or skin contact.
- Don't eat or smoke where chemicals are handled to prevent inadvertant ingestion of these chemicals.
- As with any chemical, review the MSDS from the manufacturer before using it. There should be a specific MSDS for the polyol resin blend. Be sure to follow all of the manufacturer's recommendations (note that in the same factory can be several different type of polyol blends).

Spill Containment

- Stop the spill if possible.
- Do not empty into drains.
- Dike the area with absorbent material. Vermiculite, sawdust or sand may be used to absorb as much of the spill as possible.
- Shovel spilled material into an over pack drum or open 55-gallon drum.
- Dispose according to your state, local or federal regulations.

Environmental Precautions:

Dike to prevent contamination of ground and surface water, and then transfer into closed containers. Recover if possible, or dispose of according to applicable regulations.

Overpack Drum Are Open Head Drums - 65 Gallon & 95 Gallon.

Overpack drums are used to store and transport soiled absorbent material for proper disposal. Also used for spill containment of leaking or damaged containers of up to 55 gallons. If containers are leaking they must be packed with absorbents before being transported to comply with government regulations.

Businesses that have large or small containers of hazardous chemicals need to have overpack drums on hand to comply with state and federal regulations.

Companies that work with or have on site hazardous chemicals such as spill clean-up contractors, transportation companies, labs, medical facilities, warehouses and manufacturing facilities use these types of drums.

These chemical and weather resistant drums are made of 100% high density polypropylene and are UV resistant. All drums comply with DOT 49 CFR 173.25 regulations for transporting hazardous material.

Our overpack drums come in 65 gallon and 95 gallon sizes. The 65 gallon and 95 gallon drums have screw on lids with a closed cell foam gasket

CYCLO-PENTANE

Safety issue when working with PENTANES (n-pentane, iso-pentane or cyclo-pentane)

The conversion to the HC in foam manufacturing in general contains the following steps: (i) design of foam production line, (ii) Construction of the foam Production line, including the HC storage, electric, ventilation, fire protection system etc, (iii) installation of new or retrofitted equipment (iv) trial and commissioning, (v) training , (vi) Safety audit and (vii) operation and the following safety issues should be considered

Safety considering: Cyclopentane is a flammable blowing agent. The explosion limits are 1.1-8.7% by volume in air. Therefore, it is necessary to follow strictly the safety rule. Safety at the following steps is required to be considered:

- Storage of cyclo-pentane
- Mixing of cyclo-pentane and polyol
- Storage and metering of mixer
- Foaming process

Safety Requirements When Working with Cyclo-pentane

The equipment and technology in the converted areas should be inherently safe to avoid any explosion, fire or other hazards during its use (operation, service) in line with the written instruction and training.

- Prevent leaks: All installations should be as tight as possible, pipe connections should be welded
- Avoid explosive mixtures by forced ventilation
- Do NOT use compressed air for filling, discharging, or handling.
- Use non-sparking handtools.
- Control ventilation by flow failure detectors
- Control concentrate by pentane detectors: Alarm and increase of extract speed at 20% of LEL, shutdown of electrical power at 40% LEL.

- Enclose foam dispending unit and moulds in a ventilated booth or box. Monitors above and below each mould/high pressure pump.
- Avoid ignition sources: Static electricity, parts not grounded
- Prefer central mixing of polyol with cyclo-pentane
- The mix polyol tank requires: Magnetic joint transmission or liquid barrier, nitrogen pressure,
- Flush the mould with nitrogen to bring oxygen content below 10% or test the grounding inside the press and the sandwich panel or refrigerator part to be according the required standard, e.g. 300kV/m
- During the expansion of the foam in the mould: all non-explosion proof electrical devices in the hazardous areas of the dry part should be automatically switched off;
- Electrical connections to and from the hazardous areas should be made of fireproof cables

In the case of leakage:

Evacuate danger area! Consult an expert! Provide ventilation by opening doors and windows. Collect leaking and spilled liquid in sealable containers as far as possible. Absorb remaining liquid in sand or inert absorbent and remove to safe place. Do NOT wash away into sewer. Personal protection: self-contained breathing apparatus.

CONDITIONS FOR THE SERVICES/EQUIPMENT SUPPLIED

The equipment and technology in the converted areas should be inherently safe to avoid any explosion, fire or other hazards during its use (operation, service) in line with the written instruction and training provided by the Contractor. For this reason at least the following measures should be taken by the Contractor which should be confirmed in full details in the offer:

- All equipment which may get into contact with cyclopentane or its mixture must be provided with well designed, reliable earth connection;
- All electrical contacts, motors, valves and other electrical parts of such equipment should be provided with or replaced by explosion proof types;
- All areas where cyclopentane or its mixture is present or where these can be set free should be provided with reliable and well positioned cyclopentane detectors of sufficient quantity;
- These sensors should be incorporated into the safety system(s), which in case of reaching a 20% of lower explosion limit (LEL) is/are automatically interfering into the operation of the respective foaming line first by doubling exhaust level and when 40% of LEL is reached it should cut the cyclopentane supply, switch off the electrical supply of the respective devices including the cyclopentane supply pump, activate inert gas flushing and/or in any other appropriate ways. The system should also give audio and visual warning signals to the operators;
- All hazardous areas in the converted foaming department (wet and dry parts) should be encapsulated, or where it is not practical the escape and accumulation of cyclopentane should be prevented by other appropriate measures;
- All equipment, tubes and devices which might contain cyclopentane or its mixture should be equipped with reliable seals to contain the hazardous materials;
- All hazardous areas in the converted foaming department (wet and dry parts) should be equipped with a reliable ventilation system including two separate double speed anti-spark fans of sufficient capacity, properly positioned and well-designed hoods, airflow gauges and controls;
- The safety ventilation systems, cyclopentane sensors and the safety control and alarm systems should be connected to an automatic emergency back-up power supply;
- During injection and expansion of polyurethane all non-explosion proof electrical devices in the hazardous areas of the dry part should be automatically switched off;
- Electrical connections to and from the hazardous areas should be made of fireproof cables.

Example 1

Emptying of TDI/MDI drums through 3/4″ or 2″ bunghole into a) drums with virgin product or b) waste disposal jerricans (5-60 ltr.) or drums

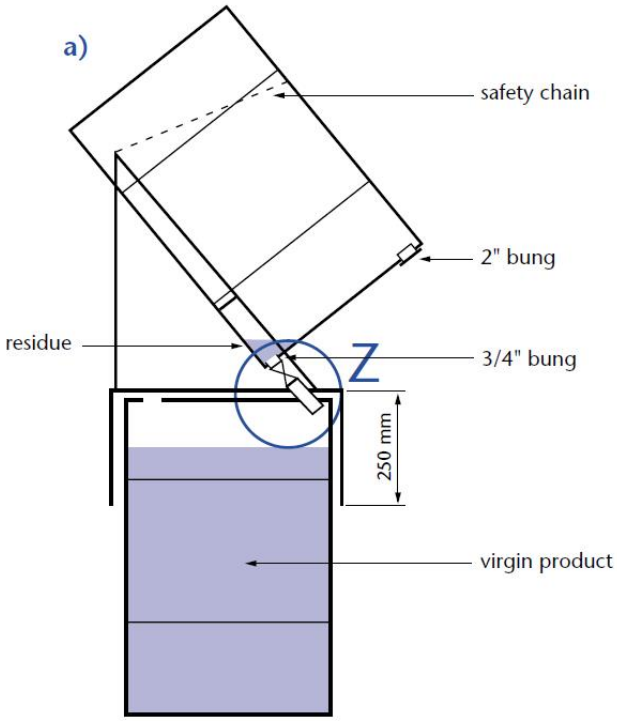

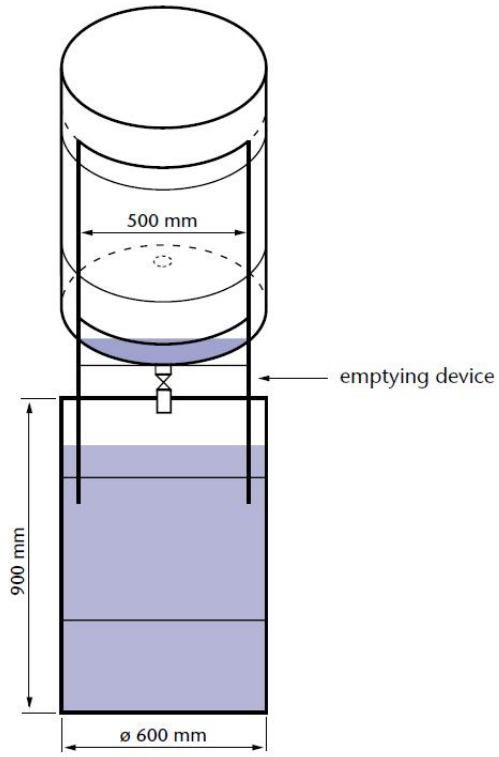

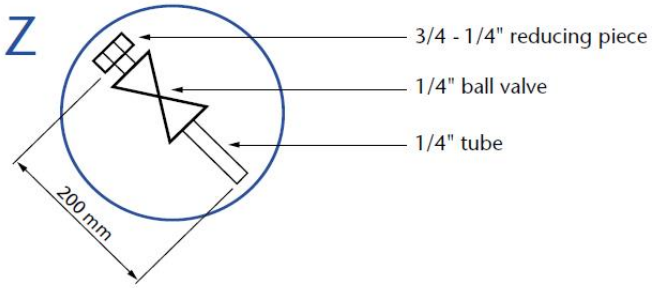

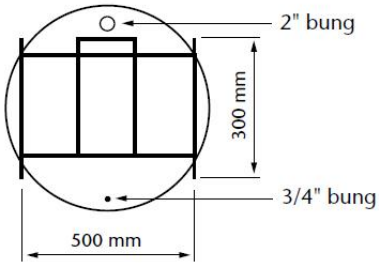

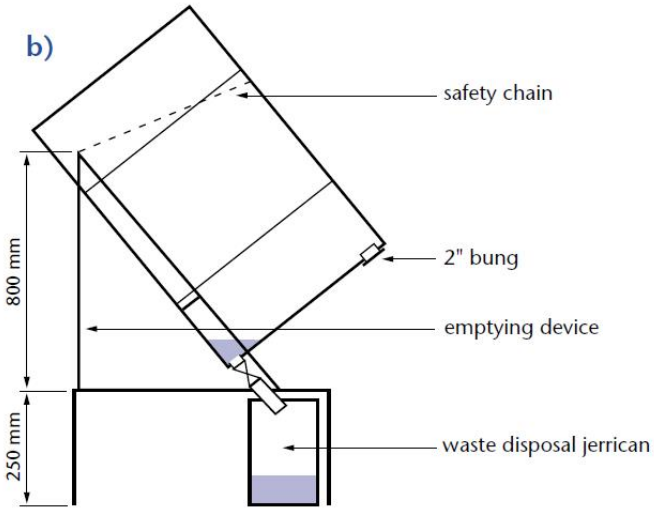

Example 2

Emptying of TDI/MDI drums through 2″ bunghole into waste disposal container (5-60 ltr.) or drums

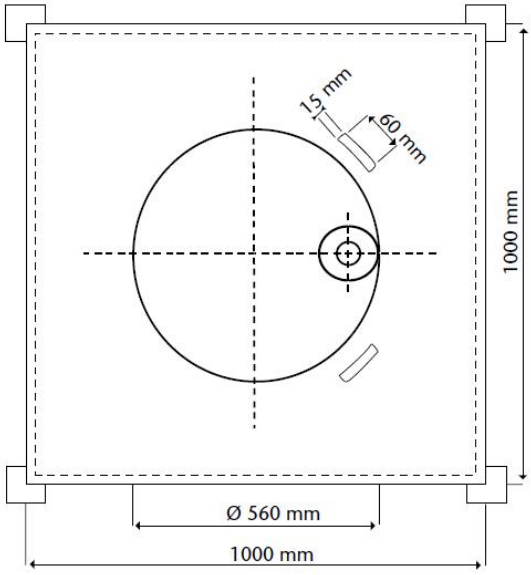

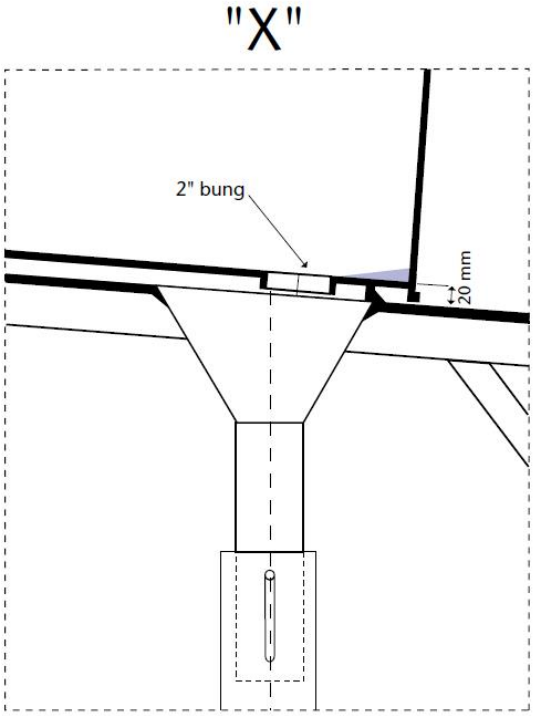

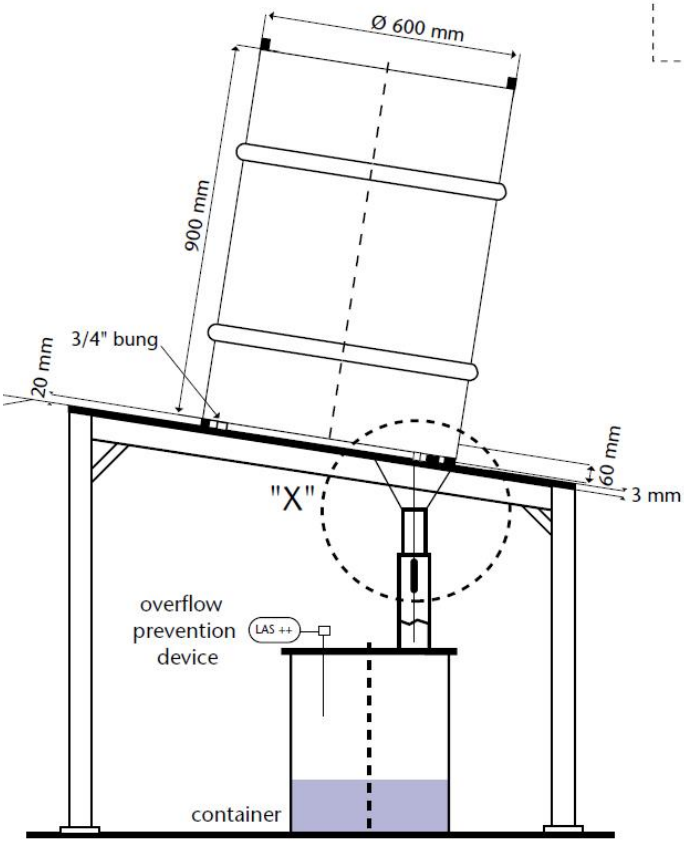

ANNEX 3 – TEMPLATE OF SITE ENVIRONMENTAL MANAGEMENT PLAN

(The Subproject owners can use this template to prepare their Site EMP)

VIETNAM HCFC PHASE OUT PROJECT STAGE 2

SUB-PROJECT PROPOSAL

Implementing company: …….

Name of company:……

Coordinating agency:
The PMU of Vietnam HCFC Phase out Project Stage II
Ministry of Natural Resources and Environment

SUBPROJECT PROPOSAL FOR ……..

PROJECT COVER SHEET

COUNTRY :	**VIET NAM**		
PROJECT TITLE:			
SECTOR COVERED:			
HCFC-22 USE IN THE ENTERPRISE			
PROJECT IMPACT (2009)	Before	After	Reduction
Reduction in the use of Ozone Depleting substance (in ODP ton)			
Reduction in the use of green house gases (ton CO_2 e) (impact of HFC-245fa is not included)			
PROJECT DURATION			
PROJECT COST (for conversion of refrigerants)			
Incremental Capital Costs:			
Contingencies (10%):			
Incremental Operating Costs:			
Total Project Cost			
MLFs FUNDING			
Eligible funding from MLFs			
Total			
Counterpart funding			

HO CHI MINH CITY, DECEMBER 2017

Cost effectiveness by Grant Funding	
BENEFICIARY ENTERPRISE:	
NATIONAL COORDINATING BODY:	
PROJECT SUMMARY	

Prepared by: …….

(Sign and seal)

Mr. ….

Director …….

Date: …….

Reviewed by: the PMU of Vietnam HCFC Phase out project

Director of the PMU:

(Sign and seal)

Date: January,.... 2017

Reviewed by the World Bank's Task Team

Date:…….. 2017

1. **INTRODUCTION**
2. **PROJECT OBJECTIVE**
3. **EMP OBJECTIVE**
4. **ENTERPRISE BACKGROUND**

[*Name of Company*]

[*Address*]
[*Tel*]:
[*Fax*]:
[*E-mail*]:
[*Website*]:

[*Name of Company*] was established in [*month, year*], and subsequently, the production of foam unit, commenced on [*date, month, year*], with a workforce of [*quantity number*] employees.

Besides selling the products locally, [*Name of Company*] is also exporting worldwide under its own brand name and to countries like [*name(s) of nations*].

Types of foam: *Other production related to HCFC phase out*;

Other production related to HCFC phase out;

- Foam
- *Air conditioner*
- *Foam tole*
- *Foam door*

In order to fulfill the ever-growing local and world-wide demand for better quality and more efficient refrigerators, [*Name of Company*] had in the past, invested a certain sum in the purchase of advanced technology Production and Testing equipment's, such as, [for example], and will continue to do so in the future.

[*Name of Company*] was established in [*month, year*], located in [*name of province*] in Vietnam. It's production of [*name of product(s)*], commenced on [*date, month, year*], with a workforce of [*quantity number*] employees with [*quantity number*] Capital Registered, today, [*Name of Company*] employs a total staff of [*quantity number*] with [*quantity number*] of them as engineers and technicians, has successfully developed a complete range of foam product, covering [*for example*]. Besides selling the products locally, [*Name of Company*] is also exporting worldwide under its own brand name to countries like [*name of country(ies)*]. In order to build [*Name of Company*] according to standards that are universally acceptable, the company has from the outset, made it a policy to be continually in search of new technology and know-how. At the factory, state-of-the-art equipment, are extensively used to ensure precision and accuracy at every stage of production. Production is computer controlled at each stage, and quality controls are in place throughout the production process, beginning with the arrival of raw materials. Finished products are tested to ensure they conform to the desired standards before leaving the factory.

Table 1 - Production of …… and amount of HCFC-22 Conversed

Year	Procurement of raw materials (ton)			Used raw materials (ton)			Production of AC (BTUs)
	POE	Cyclopentane HFO	HCFC-22	POE	Cyclopentane HFO	Replaced HCFC-22	
2015							
2016							
2017							

Table 2 – Existing production line condition: Observed impacts/risks and proposed changes during conversion of refrigerants

	Section [*photo*]	Concerned Process/Location	Observed impacts/risks related to refrigerant conversion	Proposed Changes
	Metal parts production			
	Assembly line			
	Refrigerant charging			
	Finish good, handing			
	Storage			

5. PROJET DESCRIPTION

5.1 Technology of refrigerant conversion

5.2 Project costs

Table 5-1: Project cost for conversion of refrigerants (US$)

Item	Cost US$ From Grands	Cost US$ From Enterprise
Production		
Production line		
Equipment		
Sub-Total		
General Works		
Technology transfer support		
Trials and testing		
Training		
Total technical support and safety audits		
Contingency		
Total cost **Cost Efficiency**		

5.3 Project implementation schedule

Table 5-2: Implementation Schedule

No	TASK	2017				2018				2019….			
		1	2	3	4	1	2	3	4				
1	Project proposal (technical and financial appraisal)												
2	Sub-grant Agreement signing												
3	Preparation of equipment procurement												
	Selection of supplier												
4	Equipment Contract Signing												
5	Civil work and preparation												

No	TASK	2017				2018				2019….			
		1	2	3	4	1	2	3	4				
	for the installation of equipment												
6	Transportation, equipment arrival												
7	Installation of equipment and ventilation system and Plant Modifications												
8	Operation and safety Training												
9	Validation of production and Trials												
10	Safety Certification /Audit												
11	Production start-up												
12	Disposal of baseline HCFC-base equipment												
13	Submit the measures of precautions and chemical emergency response to local authorities												
14	Project completion report preparation and submission												

No	TASK	2017				2018				2019….			
		1	2	3	4	1	2	3	4				
15	Monitoring												
16	Training												

6. LEGAL AND REGULATORY FRAMEWORK REQUIREMENTS

(see section 2)

7. ENVIRONMENTAL AND SOCIAL IMPACTS AND MITIGATIONS

(see section 3)

Table 7-1. Summary of Chemical Impacts, Key Mitigation Measures and Residual Impacts

Items	Theoretical impact	Potential impact in refrigeration production	Key mitigation measures	Residual impacts
Land acquisition				
Project commission				
Construction				
Operation				

8. MEASURES FOR HANDLING AND SAFETY OPERATING FOR NEW REFIRGERANTS

(see section 4)

9. ENVIRONMENTAL AND SAFETY MONITORING

10. TRAINING

11. EMP DISCLOSE

ANNEX 4: GUIDELINES FOR THE PREPARATION OF MEASURES ON PRECAUTIONS AND CHEMCIAL EMERGENCY RESPONSES

(The Subproject owners can use this outline to prepare the measurements on precautions and chemical emergency response)

MEASURES OF CHEMICAL PRECAUTIONS AND EMERGENCY RESPONSES

CONTENTS

III.1.3. Operating method, direct rescuing and resolving incident

III.2. Equipment and Transportation uses in respond of emergencies

III.3. Warning system, Internal Information System and External informant in Emergency situation

III.4. Cooperating plan with Internal and External Support team

III.4.1. Cooperating plan in case of Emergencies

Leakage and Spilling

Fire

III.4.2. Evacuation Plan

III.4.3. Training and Regularly Drill Plan

III.5. Detail instruction of technical measures for collecting and cleaning area polluted by Chemical emergency

III.6. Other activities to respond to Chemical Emergency

CONCLUSION

1. Company's evaluation of Measures of Chemical precautions and Emergency Responses
2. Company's Commitment
3. Other recommendations by Company

Annexes

ANNEX 5: GUIDELINES FOR THE PREPARATION OF EXPLOSION PROTECTION DOCUMENT

EMPLOYERS OBLIGATIONS

The implication of EPD are that the employer shall ensure the health and safety of workers by taking all organizational and/or technical measures to prevent the formation of explosive atmospheres, or where the nature of the activity precludes this to remove sources of ignition, and mitigate the detrimental effects of an explosion. Where necessary these measures shall be combined and/or supplemented with measures to prevent the propagation of explosions.

Organizational measures could include:-

- Permit to work systems.
- Operator training with regard to explosion protection.
- Written instructions for operators in hazardous areas.
- Emergency evacuation procedures.

+ Training staff/workers on release prevention including drills to specific to fire explosion

+ Implementation of inspection programs to maintain the mechanical integrity and operability of pressure vessels, tanks, piping systems, relief and vent valve systems, containment infrastructure, emergency shutdown systems, controls and pumps, and associated process equipment

+ Identification of locations of cyclopentane storage and associated activities on emergency plan site map

+ Description of response activities in case of fire explosion include:

- internal and external notification procedures
- specific responsibility of individual or groups
- facility evacuation routes

Technical measures could include:-

- Explosion relief systems to include bursting panels and isolation devices.
- Control of static electricity.
- Suitable explosive gas extraction and ventilation
- Suitable dust extraction and collection.
- Proper selection of electrical and non-electrical equipment.

Most of these points would be identified if an adequate explosion risk assessment is undertaken. “The employer shall assess the specific risks from explosive atmospheres taking account at least of :-

- The likelihood that explosive atmospheres will occur and their persistence.
- The likelihood that ignition sources, including electrostatic discharges, will be present and become active and effective.
- The installations, substances used, processes and their possible interactions.
- The scale of the anticipated effects.”

It is also required that the explosion risks shall be assessed overall. Places that are or can be connected via openings to places in which explosive atmospheres may be present shall be taken into account.

Verification must be carried out by persons competent in the field of explosion protection as a result of their experience and/or professional training.

The hazardous areas must be classified and allocated zone coding. Such areas will be identified with Ex-sign.

The equipment must be suitable for gases/vapours, mist and/or dust as appropriate for the hazardous zones they are used in. Such equipment will have to show appropriate markings to ensure compliance.

Perhaps the most important is to demonstrate through an Explosion Protection Document that:-

- Explosion risks have been determined and assessed.
- Adequate measures will be taken to attain aims of the EPD.

- Hazardous areas have been classified into zones and appropriate signs displayed.
- Workplace and work equipment is designed, operated and maintained with due regard for safety.
- Procedures are in place for the safe use of equipment.

This kind of document must be prepared before commencement of work and revised and republished as necessary. Obviously the format and style of this document may differ, but can be advised to use same format for all enterprises under this project.

There is also a requirement that the overall explosion safety of a work place be verified by a competent person before the area is first used.

There is a legal requirement that areas must be classified into zones defined as follows:

Explosive Atmosphere A mixture with air, under atmospheric conditions, of flammable substances in the form of gases, vapours, mists or dusts in which after ignition has occurred, combustion spreads to the entire unburned mixture.

Zone 0 A place in which an explosive atmosphere consisting of a mixture with air of flammable substances in the form of gas, vapour or mist is present continuously or for long periods or frequently.

Zone 1 A place in which an explosive atmosphere consisting of a mixture with air of flammable substances in the form of gas, vapour or mist is likely to occur in normal operation occasionally.

Zone 2 A place in which an explosive atmosphere consisting of a mixture with air of flammable substances in the form of gas, vapour or mist is not likely to occur in normal operation but, if it does occur, will persist for a short period only.

Zone 20 A place in which an explosive atmosphere in the form of a cloud of combustible dust in air is present continuously, or for long periods or frequently.

Zone 21 A place in which an explosive atmosphere in the form of a cloud of combustible dust in air is likely to occur in normal operation occasionally.

Zone 22 A place in which an explosive atmosphere in the form of a cloud of combustible dust in air is not likely to occur in normal operation but if it does occur, will persist for a short period only.

Note I - Layers, deposits and heaps of combustible dust shall be considered as any other source which can form an explosive atmosphere

Note II - Normal operation means the situation when installations are used within their design parameters.

PERMITS TO WORK

There will be, as a result of the directive, a legal requirement to have a permit to work system and written instructions for operation within workplaces containing potentially explosive atmospheres. Details of this system will be included in the Explosion Protection Document.

SIGNS

All areas classified as hazardous be identified with a warning sign. The sign must be triangular, black on yellow with the text Ex. The signs must be displayed at points of entry into explosive atmospheres.

ANNEX 6 - SUMMARY OF PROJECT STAKEHOLDER CONSULTATION OF GENERIC EMP FOR FOAM SECTOR

1. *Introduction*

The Project Stakeholder Consultation of Generic Environmental Management Plan (Generic EMP) for foam production Sectors (together with other sectors) under HCFC Phase out Project was organized at the meeting room of World Bank on 17 November, 2016. The main objective of this consultation meeting was to present the content and goal of generic EMP for foam production manufacturers and proposed mitigation measures for the conversion from HCFC-22 to other alternative gases such as cyclopentane or HFO.

The meeting is the second change for stakeholder consultant.

2. *Background and Objectives*

The HCFC Phase out Management Plan (HPMP) Stage II was continued from the Stage I by MONRE with assistance from the World Bank with the main objective to assist Vietnam to comply with the Montreal Protocol HCFC phase out obligations. The Executive Committee of the Multilateral Fund has already approved in principle the grant fund to Vietnam through the World Bank to implement activities proposed under HPMP Stage II during 2017-2020. In foan production sector, HPMP Stage II will provide financial and technical assistance to 44 foam manufacturers with major Vietnamese-ownership to convert HCFC-22 to cyclopentane or HFO.

A site- EMP must be prepared for individual enterprise following the generic EMP and be submitted as part of the sub-project proposal. Therefore, this stakeholder consultation would be a good forum to disseminate outcomes of generic EMP preparation as well as to receive valuable feedbacks from the stakeholders to improve and finalize the EMP, then later, each enterprise could complete and implement their own site-EMP.

There were 10 participants from relative agencies attending this consultation, including Hoa Phat, My Viet, Dien An, SYTMHMC, PMU, MONRE, etc. The consultant prepared the project summary EMP and generic EMP, a questionnaire which were sent to enterprises one week before meeting. For those enterprises could not attend the meeting, they can send their concerns and comments via email.

3. *Presentation on Generic Environmental Management Plan for the foam sector*

3.1 The consultants presented scope and content of generic EMP and provided an overview of related law and regulations for which the foam enterprises need to comply for the conversion to C5 and HFO Technology, which are more flammable, therefore, all enterprises must follow and comply the following regulations such as:

- Occupational Safety and Health law 2015;
- National Technical Regulations QCVN 06:2010/BXD by Ministry of construction regarding fire safety prevention for buildings and structures.
- National Technical Standard TCVN 3890:2009 regarding Fire Prevention and Protection

Equipment for buildings and structures – arrangement, check and maintenance.

- National Technical Standard TCVN 5760 regarding Fire Prevention and Protection System – General requirement on design, installation and utilization.
- National Technical Standard TCVN 2662: 1995 regarding Fire Prevention and Protection for Buildings and Structures – Design Requirements
- TCVN 2622:1995 regarding fire prevention and protection for buildings and structures – Design requirement
- TCVN 9385:2012 regarding protection of structures against lightning.
- TCVN 5507: 2002 regarding "Hazardous chemicals - Code of practice for safety in production, commerce, use, handing and transportation"
- Circular No. 20/2013/TT-BCT dated 5 August, 2013 on the implement of Decree No.26/2011 and regulation of plans and measures on precautions, chemical emergency response for industrial sectors.
- Circular No 11/2014/TT- BCA of the Ministry of Police on Fire prevention and protection dated 12 March, 2014 on detailed regulations in Decree No. 35/2003/ND-CP dated 04 March 2003, Decree No. 46/2012/ND-CP dated 22 May 2012.
- QCVN 07:2009/BTNMT: National technical regulation on hazardous waste thresholds.
- Discharge, emission, and Waste management shall meet minimum requirement as stated on the QCVN 06:2009/BTNMT; QCVN 07:2009/BTNMT, QCVN 14:2006/BTNMT; QCVN 40:2011/BTNMT.

3.2 The consultant also raised the responsibility of enterprises related on environment. The discussion was opened with all stakeholders and find out that all participating enterprises were able to fulfill their legal environmental protection responsibility.

3.3 The consultant presented main potential adverse impacts due to refrigerant changes. The consultant proposed mitigation measures and good practices which were introduced in the generic EMP. The major areas to be associated with alternative gases are (i) charging line, (ii) storage area of alternative gases and (iii) the storage area of finished products.

3.4 The requirements of monitoring, training and reporting was also presented.

4. Comments Received from foam Enterprises

The enterprises expressed that they have experience in using HCFC-22 and thus have no objection with the proposed mitigation measures for cyclopentane and HFO. With the technical supports from equipment suppliers, the enterprises will design the plant layout to suit the use of cyclopentane and HFO. Participants expressed the following recommendations/suggestions to improve the EMP:

- Enterprises raised a concern on risk of fire and explosion due to flammability of new gas and the high cost of installation of gas detector when compared to the approved funding by the Executive Committee. The approved funding may not be sufficient for the enterprise to install the devices.
- Some enterprises would like to receive more information about the change technology and suppliers. Some enterprises felt very difficult to select the suitable technology, the changing gas, eg. Cyclopentane or HFO or XPS and would like to visit the factories in phase 1 for sharing experience.
- The enterprises in phase II are mostly small and medium scale, therefore, it is difficult for them to implement all investment and mitigation measures, safety operation when the supports from the Bank become smaller compared with those in previous phase.
- One enterprise requests the technical training for workers. He suggested the oversea training for technical engineers on new technology.
- The system-house and using pre-blended polyol received a lot of comments. How the project can manage the price of pre-blended polyol. The project grants may create the favour conditions for production at the system-house more than for other enterprises.
- Enterprises concern on operation regime of system houses.
- The Government or the Bank should enforce the enterprises collect and treat the old gas (HCFC-22) when doing maintenance or replacing them with new gas in service sectors to avoid discharge them to environment.

5. *List of Stakeholders attend the consultation meeting*

Mr. Nguyen Chi Toan – tel0908080123, Vice Director

Mr. Doan Van Huong, Factory Manager

R.E.E Electric Appliances J.S. Company

Mr. Duong Van Thao, A/C factory manager

Mr. Dam Hai Binh, factory manager

Ms. Nguyen Thi Hoa, Admin. Officer

Midea Consumer Electric (VN) Co. Ltd.

Mr. Ngo Nguyen Ngoc Sang

Deputy Director

Phu Vuong Corp.

Mr. Nguyen The Long, Vice Director 090620227

Darling Electronic –Refrigeration Co. Ltd.

Mr, Ngo Tu Diep, General Director – 0903888999

Mr. Ngo Tu Quarng, Vice Director – 0902004949

Ngo Long Co. Ltd.

Mr. Canh

6 M Co., Ltd.

Mr. Nguyen Van Hung – factory Manager

Mr. Tran Van Son – Chairman of Financial Committee

Viet Trust Co., Ltd.

6. *List of Stakeholders attend the 2nd consultation meeting*

Tran Ngoc Tuan

Vice Director of Hoa Phat Com. Ltd.

TranThi Minh Chinh, Pham Nhat Quang

My Viet Com. Ltd.

Vu Manh Cuong

Director of LLMC

Dinh Van Hien

SYTM HMC Com. Ltd.

Pham Phan Anh Thu, Vu Thi Thu Thuy

Nagakawa VN

Tran Van Cuong

Hoang Minh Quan, Le Cam Van

HPMPI- PMU